Code No. XXXXXXX
Rev. 1 (01/21)

PWT by SLOAN

INSTALLATION INSTRUCTIONS FOR RETROFIT 8603 ESM

RESS Water Closet Models can be furnished for the following:

1.28 gpf/4.8 Lpf	High Efficiency
1.6 gpf/6.0 Lpf	For Low Consumption Bowls
2.4 gpf/9.0 Lpf	For 9 Liter European Water Closets
3.5 gpf/13.2 Lpf	For older Water Closets

RESS Series Retrofit Conversion Kit Models

RESS 8603-ESM models are used to upgrade PWT flushometers to battery operated, field programmable units.

LIMITED WARRANTY

Unless otherwise noted, Sloan Valve Company warrants this product, manufactured and sold for commercial or industrial uses, to be free from defects in material and workmanship for a period of three (3) years (one (1) year for special finishes, SF faucets, PWT electronics and 30 days for PWT software) from the date of first purchase. During this period, Sloan Valve Company will, at its option, repair, replace, or refund the purchase price of any product which fails to conform with this warranty under normal use and service. This shall be the sole and exclusive remedy under this warranty. Products must be returned to Sloan Valve Company, at customer's cost. No claims will be allowed for labor, transportation or other costs. Damage caused by misuse or improper installation are all excluded from this warranty. This warranty extends only to person or organizations who purchase Sloan Valve Company's products directly from Sloan Valve Company for purpose of resale. This warranty does not cover the life of the batteries.

THERE ARE NO WARRANTIES WHICH EXTEND BEYOND THE DESCRIPTION ON THE FACE HEREOF. IN NO EVENT IS SLOAN VALVE COMPANY RESPONSIBLE FOR ANY CONSEQUENTIAL DAMAGES OF ANY MEASURE WHATSOEVER.

PRIOR TO INSTALLATION

Prior to installing the 8603 ESM RESS head, install the items listed below as illustrated in the Rough-in Diagram. (New installations only.)

- Closet fixture
- Drain line
- Water supply line

Important:

- **ALL PLUMBING SHOULD BE INSTALLED IN ACCORDANCE WITH APPLICABLE CODES AND REGULATIONS.**
- **WATER SUPPLY LINES MUST BE SIZED TO PROVIDE AN ADEQUATE VOLUME OF WATER FOR EACH FIXTURE.**
- **WHEN INSTALLING A FLUSHOMETER, IT IS IMPORTANT THAT THE FLUSH MODEL MATCHES THE REQUIREMENTS OF THE PLUMBING FIXTURE.**
- **FLUSH ALL WATER LINES PRIOR TO MAKING CONNECTIONS.**

The RESS 8603 ESM is designed to operate with 15 to 100 PSI (104 to 689 kPa) of water pressure. **THE MINIMUM PRESSURE REQUIRED TO THE VALVE IS DETERMINED BY THE TYPE OF FIXTURE SELECTED.** Consult fixture manufacturer for pressure requirements.

Most Low Consumption/High Efficiency water closets (1.28/1.6 gpm) require a minimum flowing pressure of 25 psi (172 kPa).

TOOLS REQUIRED FOR INSTALLATION

- Slotted screwdriver to adjust control stop.
- Sloan A-50 Super-Wrench™, Sloan A-109 Plier Wrench or smooth jawed spud wrench for couplings.
- Strap wrench (supplied) to install PWT valve body.
- 7/64" hex wrench (supplied) to secure PWT cover to base plate.

1- REMOVE COMPONENTS FROM EXISTING FLUSHOMETER (RESS RETROFIT INSTALLATIONS ONLY)

A Remove Control Stop Cap.

B Turn off water supply at Control Stop. Push Valve Handle to relieve water pressure.

C Remove Outside and Inside Covers and old Inside Parts Kit.

D Remove old Handle Assembly and Gasket.

E Install Chrome Handle Cap with Gasket to handle opening on Flushometer Body. Tighten Chrome Handle Cap securely.

NOTE

An extra H-553 Tail O-ring is included in the event leakage occurs if the valve is repositioned during the installation of the new 8603 RESS. USE ONLY AS NEEDED.

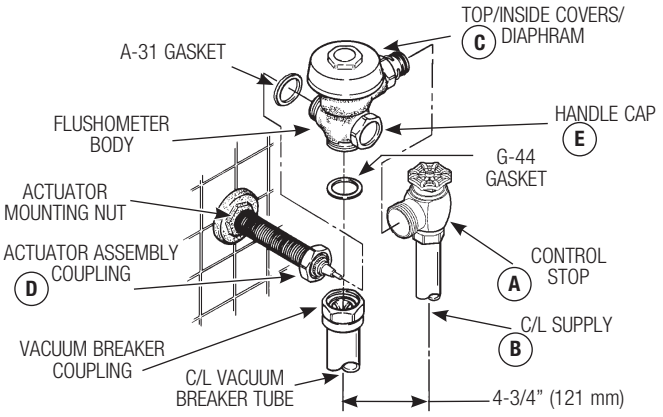

2 - 8603 RESS FLUSH VOLUME

The Flush Volume of the 8603 RESS is controlled by the Regulator in the Flex Tube Diaphragm Kit. Regulators are identified by color.

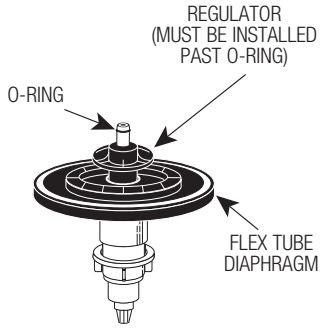

!!! IMPORTANT !!!

LAWS AND REGULATIONS PROHIBIT THE USE OF HIGHER FLUSHING VOLUMES THAN LISTED ON FIXTURES OR FLUSHOMETERS.

3 - ASSEMBLE FLEX TUBE DIAPHRAGM TO 8603 RESS ASSEMBLY

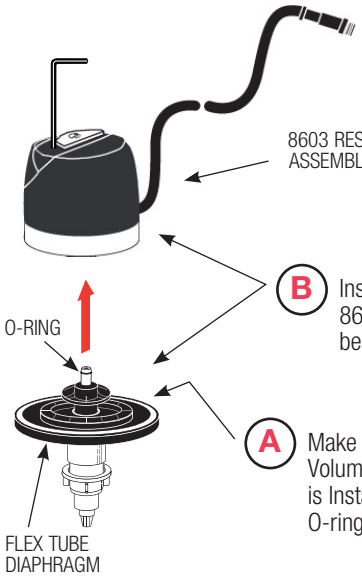

B Insert metal end into hole in base of 8603 RESS Assembly. O-ring must be fully inserted into the hole.

A Make sure Flush Volume Regulator is Installed Past O-ring.

C Push Diaphragm securely against underside of 8603 RESS Assembly. Place entire Assembly onto the Valve Body.

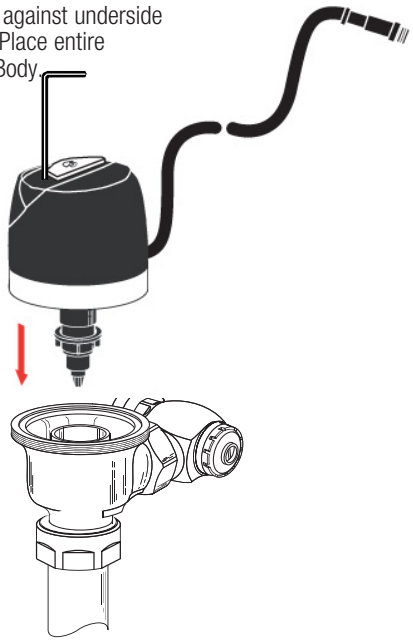

NOTE

Sensor Lens must face the chase opening or be aligned to view the window for programming & maintenance.

To facilitate installation, wet the diaphragm assembly (on top or completely).

4 - TIGHTEN LOCKING RING

A Thread Locking Ring onto Valve Body.

B Use Strap Wrench provided to tightly secure Locking Ring.

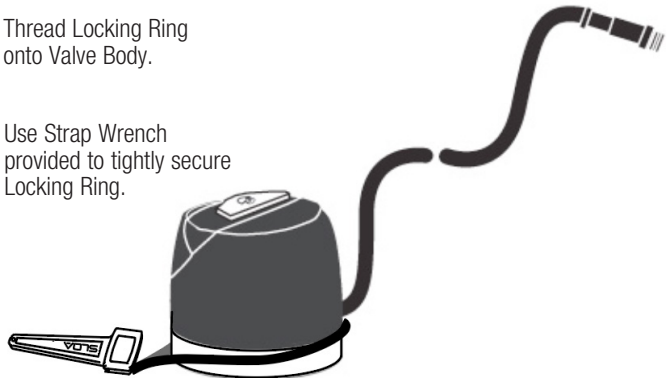

!!! IMPORTANT !!!

The Locking Ring must be installed down past the valve body threads by at least one thread. If difficulty is experienced installing the Locking Ring, turn the Locking Ring back and forth, each time working it further down the threads. The Locking Ring will act as a thread chaser in the event there has been a build-up of matter on the threads of the old valve body.

For hydraulic or solenoid operated retrofits the 0305190PK EL-190 Handle Adapter ASM w/ F/32A is required.

If fitting the 8603 RESS on another vendor's valve, you need to order the 3325524 EBV31A Retrofit Kit Coupling Ring, or the 0305843 EBV CP Coupling Ring for valve body compatibility. The special Locking Ring is identified by a machined groove around the ring. Contact Sloan for specific valve details.

5 - FLUSH OUT SUPPLY LINE AND ADJUST CONTROL STOP

A Shut off Control Stop by turning handle CLOCKWISE. Then remove Flushometer Cover.

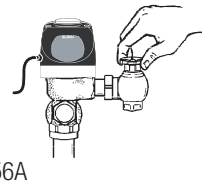

B Remove diaphragm assembly and use an A156A REGAL diaphragm #5301188 (purchased separate into the valve body as a gasket. Re-install Control Module Assembly and tighten with a strap wrench. Turn open control stop to begin flushing out supply line".

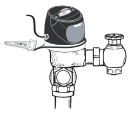

CAUTION: LARGE DEBRIS COULD PLUG THE FIXTURE'S RIM AND SIPHON JET HOLES. A MORE SUITABLE METHOD MAY BE TO USE AN H551A 2" TAILPIECE AND H550 TAILPIECE COUPLING, CONNECTING TO THE CONTROL STOP, AND USING 1" PIPE OR TUBING TO FLUSH DIRECTLY INTO THE WASTE LINE OR FLOOR DRAIN TO PREVENT DEBRIS PLUGGING THE FIXTURE. A FILTER BAG MAY BE REQUIRED TO PREVENT EXCESS DEBRIS FROM CLOGGING THE WASTE LINE. THIS MAY BRING LARGE DEBRIS TO THE CONTROL STOP, WHICH COULD CLOG OR JAM THE INTERNAL PARTS OF THE CONTROL STOP, WHICH WOULD REQUIRE TURNING OFF WATER MAIN OR ISOLATION VALVE TO CLEAN OR REPLACE THE CONTROL STOP'S INTERNAL PARTS, BEFORE FINISHING INSTALLATION.

C Shut off Control Stop and remove Flushometer Cover. Reinstall Inside Parts Assembly and Flushometer Cover. Tighten Cover with wrench. Open Control Stop and activate Flushometer Valve.

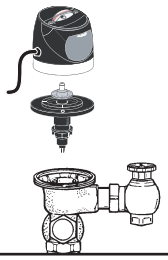

!!! IMPORTANT !!!

SLOAN PRISON MODEL FLUSHOMETERS ARE ENGINEERED FOR QUIET OPERATION. EXCESSIVE WATER FLOW CREATES NOISE, WHILE TOO LITTLE WATER FLOW MAY NOT SATISFY THE NEEDS OF THE FIXTURE. PROPER ADJUSTMENT IS MADE WHEN THE PLUMBING FIXTURE IS CLEANSED AFTER EACH FLUSH WITHOUT SPLASHING WATER OUT FROM THE LIP AND A QUIET FLUSHING CYCLE IS ACHIEVED.

NEVER OPEN CONTROL STOP TO WHERE THE FLOW FROM THE VALVE EXCEEDS THE FLOW CAPABILITY OF THE FIXTURE. IN THE EVENT OF A VALVE FAILURE, THE FIXTURE MUST BE ABLE TO ACCOMMODATE A CONTINUOUS FLOW FROM THE VALVE.

D Adjust Control Stop to meet flow rate required for proper cleansing of fixture. Open Control Stop COUNTERCLOCKWISE ONE FULL turn from closed position. Activate Flushometer. Adjust Control Stop after each flush until the rate of flow delivered properly cleanses the fixture.

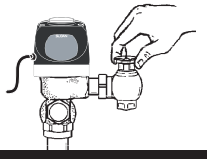

6 - SETTING THE PROGRAM

SETTING THE PROGRAM

1. Press and hold override Button.Continue holding the button until thE desired program is reached.
2. After about 5 seconds, the LED will turn on for 3 seconds indicating the start of the program section period.
3. LED will blink in 2 second intervals indicating the program.
4. Count the blinks until the desired program number, then release the button. For example, if you want program #3, release the button after the LED blinks for the third time.
5. After the button is released, the LED display will blink indicating which program is selected.
6. Unit comes with program #1 as default program.

PROGRAM

8603-2.4 ESM-A01: Release button after 1st blink: 2 activations in a 5 minute window with a lockout of 15 minutes (default program).

8603-2.4 ESM-A02: Release button after second blink: *2* activations in a 5 minute window with a lockout of 30 minutes.

8603-2.4 ESM-A03: Release button after 3rd blink: *2* activations in a 5 minute window with a lockout of 45 minutes.

8603-2.4 ESM-A04: Release button after 4th blink: *2* activations in a 5 minute window with a lockout of 60 minutes.

8603-2.4 ESM-A05: Dorm Setting: 60 second backside lockout/delay after activation: Check which program is running. Press and release override button, flush should happen right away, then LED will blink the number of corresponding program number.

7- BATTERY REPLACEMENT

When required, replace batteries with four (4) Alkaline AA-Size Batteries.

Note: Water does not have to be turned off to replace Batteries.

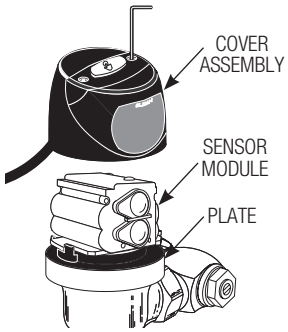

Loosen the two (2) Screws on top of unit. Remove the complete Cover Assembly. Lift the Sensor Module from its Plate. Unplug the Electrical Connector from Battery Compartment Cover. Loosen the Retaining Screw on Battery Compartment Cover and remove Battery Compartment Cover. Install four (4) Alkaline AA-Size Batteries exactly as illustrated.

Install Battery Compartment Cover and secure with Retaining Screw.

Make certain that Battery Compartment Cover is fully compressed against Gasket to provide a seal; Do Not overtighten. Plug the Electrical Connector into the Battery Compartment Cover. Reinstall the Sensor Module onto the Plate. Reinstall the complete Cover Assembly onto the Plate. Tighten the two (2) Screws on top of the unit.

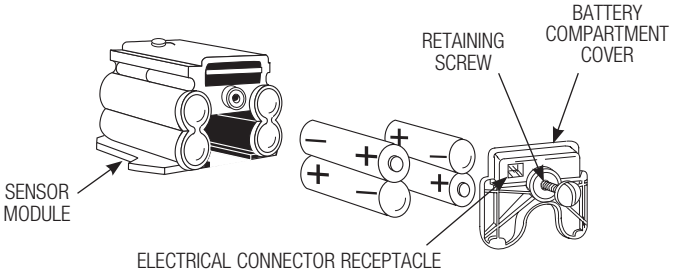

TROUBLESHOOTING AND MAINTAINING THE 8603 ESM

IMPORTANT: This product contains mechanical and/or electrical components that are subject to normal wear. These components should be checked on a regular basis and replaced as needed to maintain the valve's performance.

Never open Control Stop to where the flow from the valve exceeds the flow capability of the fixture. In the event of a valve failure, the fixture must be able to accommodate a continuous flow from the valve.

ATTENTION INSTALLERS: With the exception of the control stop inlet, DO NOT USE pipe sealant or plumbing grease on any valve component or coupling! To protect the chrome or special finish of Sloan flushometers, DO NOT USE toothed tools to install or service these valves. Use our A-50 Super-Wrench™ or other smooth-jawed wrench to secure couplings. Regulations for low consumption fixtures (1.6 gpf/6.0 Lpf closets and 1.0 gpf/3.8 Lpf urinals) prohibit use of higher flush volumes.

1. Valve does not flush.

A. Check Pushbutton Connection.

B. Is the LED on the pushbutton Red? Unit is in Lock-out.

C. Does Override flush the unit? If yes, Unit is reset.

D. Low Battery indicator (2 quick flashes every 4 seconds).

E. Battery needs replacement (4 quick flashes every 4 seconds) unit will not flush.

2. Valve does not flush but makes clicking sound.

A. No water is being supplied to the valve. Make certain that water supply is turned on and control is open.

B. Problem with solenoid. Replace solenoid.

3. Valve does not shut off.

A. Bypass Orifice in Diaphragm is clogged with dirt or debris, or Bypass is clogged by an invisible gelatinous film due to "over-treated" water. Remove Flex Tube Diaphragm and wash under running water.

Note: Size of orifice in the by-pass is of utmost importance for the proper metering of water by the valve. **DO NOT ENLARGE OR DAMAGE THIS ORIFICE.** Replace flex tube diaphragm if cleaning does not correct the problem.

B. Dirt or debris fouling Stem or Flex Tube Diaphragm. Remove Flex Tube Diaphragm and wash under running water.

C. O-ring on Stem of Flex Tube Diaphragm is damaged or worn. Replace O-ring if necessary.

D. Problem with Electronic Sensor Module; replace Sensor Module.

4. Valve does not shut off.

A. Bypass Orifice in Diaphragm is clogged with dirt or debris, or Bypass is clogged by an invisible gelatinous film due to "over-treated" water. Remove Flex Tube Diaphragm and wash under running water.

Note: Size of orifice in the by-pass is of utmost importance for the proper metering of water by the valve. **DO NOT ENLARGE OR DAMAGE THIS ORIFICE.** Replace flex tube diaphragm if cleaning does not correct the problem.

B. Dirt or debris fouling Stem or Flex Tube Diaphragm. Remove Flex Tube Diaphragm and wash under running water.

C. O-ring on Stem of Flex Tube Diaphragm is damaged or worn. Replace O-ring if necessary.

D. Problem with Electronic Sensor Module; replace Sensor Module.

5. Not enough water to fixture.

A. Wrong Flush Volume Regulator installed in Flex Tube Diaphragm Kit. Install the correct Regulator.

B. Wrong 8603 ESM Diaphragm kit installed; i.e., 1 gpf. urinal installed on 3.5 gal. closet fixture. Replace with proper Optima Plus diaphragm kit.

C. Enlarged Bypass in Diaphragm. Replace Flex Tube Diaphragm.

D. Control Stop not adjusted properly. Readjust Control Stop.

E. Inadequate volume or pressure at supply. Increase water pressure or supply (flow) to valve. Consult factory for assistance.

F. Head not securely tightened on flushometer body. Tighten using strap wrench.

6. Too much water to fixture.

A. Wrong Flush Volume Regulator installed in Flex Tube Diaphragm Kit. Install the correct Regulator.

B. Control Stop not adjusted properly. Readjust Control Stop.

C. Wrong Diaphragm kit installed; i.e., 3.5 gpf. closet installed on 0.5 gal. urinal fixture. Replace with proper Optima Plus Diaphragm kit.

D. Dirt in Diaphragm Bypass. Clean under running water or replace Flex Tube Diaphragm.

When further assistance is required, please contact your local Sloan Representative or the Sloan Technical Support at:

+1.888.SLOAN.14 (+1.888.756.2614)

!!! IMPORTANT !!!

THIS PRODUCT CONTAINS MECHANICAL AND/OR ELECTRICAL COMPONENTS THAT ARE SUBJECT TO NORMAL WEAR. THESE COMPONENTS SHOULD BE CHECKED ON A REGULAR BASIS AND REPLACED AS NEEDED TO MAINTAIN THE VALVE'S PERFORMANCE.

!!! IMPORTANT !!!

WITH THE EXCEPTION OF CONTROL STOP INLET, DO NOT USE PIPE SEALANT OR PLUMBING GREASE ON ANY VALVE COMPONENT OR COUPLING!

!!! IMPORTANT !!!

SLOAN PRISON MODEL FLUSHOMETERS ARE ENGINEERED FOR QUIET OPERATION. EXCESSIVE WATER FLOW CREATES NOISE, WHILE TOO LITTLE WATER FLOW MAY NOT SATISFY THE NEEDS OF THE FIXTURE. PROPER ADJUSTMENT IS MADE WHEN THE PLUMBING FIXTURE IS CLEANSED AFTER EACH FLUSH WITHOUT SPLASHING WATER OUT FROM THE LIP AND A QUIET FLUSHING CYCLE IS ACHIEVED.

NEVER OPEN CONTROL STOP TO WHERE THE FLOW FROM THE VALVE EXCEEDS THE FLOW CAPABILITY OF THE FIXTURE. IN THE EVENT OF A VALVE FAILURE, THE FIXTURE MUST BE ABLE TO ACCOMMODATE A CONTINUOUS FLOW FROM THE VALVE.

!!! IMPORTANT !!!

LAWS AND REGULATIONS PROHIBIT THE USE OF HIGHER FLUSHING VOLUMES THAN LISTED ON FIXTURES OR FLUSHOMETERS.

PARTS LIST

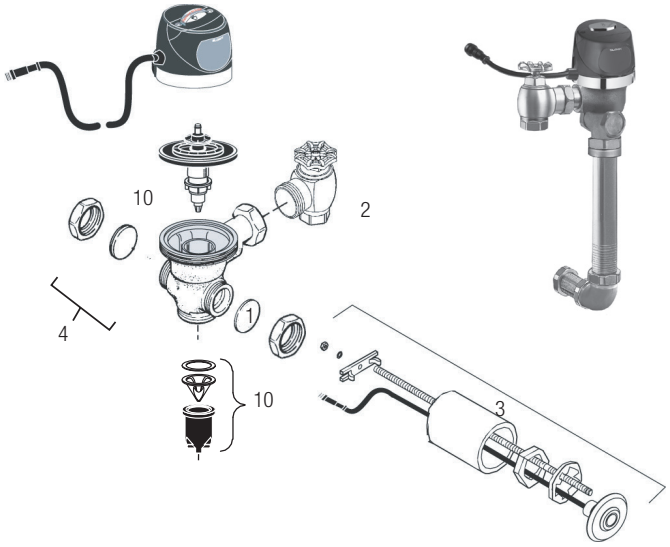

PARTS LIST

Item No.	Part No.	Description
1.	†	A1 & A2 RB Valve Body Sub-Assembly w/ 2 1/16" Tail
2.	H-730-A	1" (25 mm) Wheel Handle Bak-Chek® Control Stop
3.	†	Push Button Actuator Assembly
4.	A-1013-A	RB Concealed Handle Cap Kit
10.	V-551-A	Vacuum Breaker Repair Kit

SEE SLIP JOINT GASKETS AND RINGS TABLE ON NEXT PAGE

† Part number varies with valve model variation; consult factory.

ITEM 10. FLEX TUBE DIAPHRAGM KIT

Code No.	Part No.	Description	Regulator Color *
3325153	EBV-1024-A	Closet-1.28 gpf/4.8 Lpf †	GREEN
3325152	EBV-1020-A	Closet-1.6 gpf/6.0 Lpf	GREEN
3325001	EBV-1020-A	Closet-3.5 gpf/13.2 Lpf	WHITE
3325014	EBV-1021A	closet-2.4 gpf/9.0 Lpf	BLUE

* Color of regulator to be used with flex tube diaphragm to obtain the listed flush volume.

A 1.0 gpf (3.8 Lpf) Urinal kit can be converted to a 1.5 gpf (5.7 Lpf) Urinal by replacing the Green Regulator with the supplied Black Regulator.

A 1.6 gpf (6.0 Lpf) Closet kit can be converted to a 3.5 gpf (13.2 Lpf) Closet by replacing the Green Regulator with the supplied White Regulator.

A 1.28 gpf Closet kit can be converted to a 1.6/2.4/3.5 gpf Closet by replacing the Regulators.

ITEM 10. REGULATORS

The flush volume of the flex tube diaphragm kit is controlled by the regulator. Regulators are identified by color. Some flex tube diaphragm kits are supplied with multiple regulators. The installer must make sure the proper regulator is used when installing the flex tube diaphragm kit.

REGULATOR (SOLD 6 PER PACKAGE)

Code No.	Part No.	Description	Regulator Color
5325122	EBV-95	Closet-1.28 gpf/4.8 Lpf	GREEN
5325122	EBV-95	Closet-1.6 gpf/6.0 Lpf	GREEN
5325130	EBV-102-1	Closet-3.5 gpf/13.2 Lpf	WHITE
5325128	EBV-101	Closet-2.4 gpf/9.0 Lpf	BLUE

FLEX TUBE DIAPHRAGM ASSEMBLY

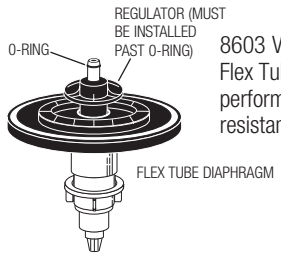

8603 Valve Models Feature Sloan's Exclusive Flex Tube Diaphragm™ for the ultimate in valve performance, reliability and Chloramine resistance.

BATTERY REPLACEMENT

When required, replace batteries with four (4) Alkaline AA-Size Batteries.

Note: Water does not have to be turned off to replace batteries.

Loosen the two (2) Screws on top of unit. Remove the complete Cover Assembly. Lift the Module from its Plate. Unplug the Electrical Connector from Battery Compartment Cover. Loosen the Retaining Screw on Battery Compartment Cover and remove Battery Compartment Cover. Install four (4) Alkaline AA-Size Batteries **exactly** as illustrated.

Install Battery Compartment Cover and secure with Retaining Screw. Make certain that Battery Compartment Cover is fully compressed against Gasket to provide a seal; **Do Not** overtighten. Plug the Electrical Connector into the Battery Compartment Cover. Reinstall the Module onto the Plate. Reinstall the complete Cover Assembly onto the Plate. Tighten the two (2) Screws on top of the unit.

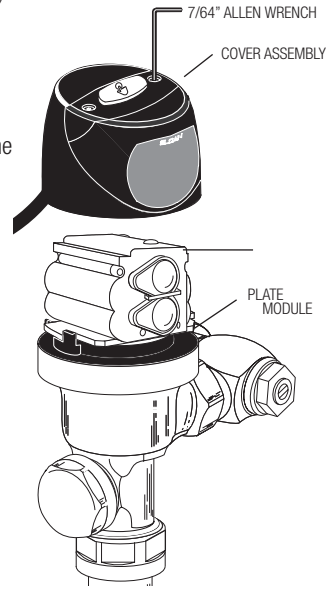

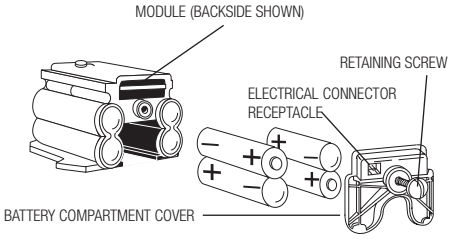

SLIP JOINT GASKETS AND RINGS

Size	Code No.	Part No.	Description
1-1/2"	**5306058**	F-3	Red Friction Ring
	5322001	VBF-5	Black Slip Joint Gasket
	0319086/5319086	S-30	Flexible Seat
	0319079	S-21	Rigid Seat (rubber over brass)
1-1/2"	**0396062**	F-105	Slip Joint Gasket – Rigid
1"	**5306056**	F-3	Red Friction Ring
	5306115	F-5	Black Slip Joint Gasket

SLOAN • 10500 SEYMOUR AVENUE • FRANKLIN PARK, IL 60131
Phone: 1-800-9-VALVE-9 or 1-800-982-5839 • Fax: 1-800-447-8329 or 1-847-671-4380 • www.sloan.com
Copyright © 2021 SLOAN