SHARP SERVICE MANUAL

S0513R25JTF//

COMMERCIAL MICROWAVE OVEN

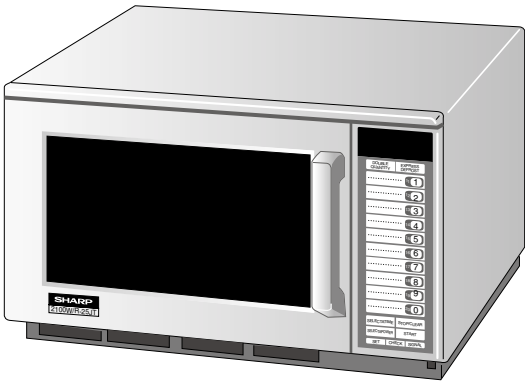

MODEL R-25JT-F

In the interest of user-safety the oven should be restored to its original condition and only parts identical to those specified should be used.

WARNING TO SERVICE PERSONNEL: Microwave ovens contain circuitry capable of producing very high voltage and current, contact with following parts may result in a severe, possibly fatal, electrical shock. (High Voltage Capacitor, High Voltage Power Transformer, Magnetron, High Voltage Rectifier Assembly, High Voltage Harness etc..)

TABLE OF CONTENTS

Page

PRECAUTIONS TO BE OBSERVED BEFORE AND DURING SERVICE TO AVOID POSSIBLE EXPOSURE TO EXCESSIVE MICROWAVE ENERGY ..... INSIDE FRONT COVER
BEFORE SERVICING ..... INSIDE FRONT COVER
WARNING TO SERVICE PERSONEL 1
MICROWAVE MEASUREMENT PROCEDURE 2
FOREWORD 3
PRODUCT SPECIFICATIONS 4
GENERAL INFORMATION 4
OPERATION 6
TROUBLE SHOOTING GUIDE/ TEST PROCEDURE 11
TOUCH CONTROL PANEL 21
COMPONENT REPLACEMENT AND ADJUSTMENT PROCEDURE 31
PICTORIAL DIAGRAM 37
CONTROL PANEL CIRCUIT 38
PRINTED WIRING BOARD 39
PARTS LIST 40
PACKING AND ACCESSORIES 45

SHARP CORPORATION

This document has been published to be used for after sales service only.
The contents are subject to change without notice.

PRECAUTIONS TO BE OBSERVED BEFORE AND DURING SERVICING TO AVOID POSSIBLE EXPOSURE TO EXCESSIVE MICROWAVE ENERGY

(a) Do not operate or allow the oven to be operated with the door open.
(b) Make the following safety checks on all ovens to be serviced before activating the magnetron or other microwave source, and make repairs as necessary: (1) interlock operation, (2) proper door closing, (3) seal and sealing surfaces (arcing, wear, and other damage), (4) damage to or loosening of hinges and latches, (5) evidence of dropping or abuse.
(c) Before turning on microwave power for any service test or inspection within the microwave generating compartments, check the magnetron, wave guide or transmission line, and cavity for proper alignment, integrity, and connections.
(d) Any defective or misadjusted components in the interlock, monitor, door seal, and microwave generation and transmission systems shall be repaired, replaced, or adjusted by procedures described in this manual before the oven is released to the owner.
(e) A microwave leakage check to verify compliance with the Federal Performance Standard should be performed on each oven prior to release to the owner.

BEFORE SERVICING

Before servicing an operative unit, perform a microwave emission check as per the Microwave Measurement Procedure outlined in this service manual.
If microwave emissions level is in excess of the specified limit, contact SHARP ELECTRONICS CORPORATION immediately @1-800-237-4277.

If the unit operates with the door open, service person should 1) tell the user not to operate the oven and 2) contact SHARP ELECTRONICS CORPORATION and the Food and Drug Administration's Center for Devices and Radiological Health immediately.

Service personnel should inform SHARP ELECTRONICS CORPORATION of any certified unit found with emissions in excess of $4mW/cm^2$. The owner of the unit should be instructed not to use the unit until the oven has been brought into compliance.

WARNING TO SERVICE PERSONNEL

Microwave ovens contain circuitry capable of producing very high voltage and current, contact with following parts may result in a severe, possibly fatal, electrical shock.

(Example)

High Voltage Capacitor, High Voltage Power Transformer, Magnetron, High Voltage Rectifier Assembly, High Voltage Harness etc..

Read the Service Manual carefully and follow all instructions.

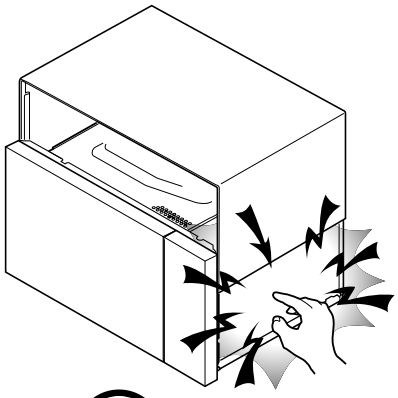

Don't Touch !
Danger High Voltage

Before Servicing

1. Disconnect the power supply cord , and then remove outer case.
2. Open the door and block it open.
3. Discharge two high voltage capacitors.

WARNING: RISK OF ELECTRIC SHOCK. DISCHARGE THE TWO HIGH VOLTAGE CAPACITORS BEFORE SERVICING.

The high-voltage capacitors remain charged about 60 seconds after the oven has been switched off. Wait for 60 seconds and then short-circuit the connection of the high-voltage capacitors (that are the connecting lead of the high-voltage rectifiers) against the chassis with the use of an insulated screwdriver.

Whenever troubleshooting is performed the power supply must be disconnected. It may, in some cases, be necessary to connect the power supply after the outer case has been removed, in this event,

1. Disconnect the power supply cord, and then remove outer case.
2. Open the door and block it open.
3. Discharge two high voltage capacitors.
4. Disconnect the leads to the primary of the power transformer.
5. Ensure that the leads remain isolated from other components and oven chassis by using insulation tape.
6. After that procedure, reconnect the power supply cord.

When the testing is completed,

1. Disconnect the power supply cord, and then remove outer case.
2. Open the door and block it open.
3. Discharge two high voltage capacitors.
4. Reconnect the leads to the primary of the power transformer.
5. Reinstall the outer case (cabinet).
6. Reconnect the power supply cord after the outer case is installed.
7. Run the oven and check all functions.

After repairing

1. Reconnect all leads removed from components during testing.
2. Reinstall the outer case (cabinet).
3. Reconnect the power supply cord after the outer case is installed.
4. Run the oven and check all functions.

Microwave ovens should not be run empty. To test for the presence of microwave energy within a cavity, place a cup of cold water on the oven turntable, close the door and set the power to HIGH and set the microwave timer for two (2) minutes. When the two minutes has elapsed (timer at zero) carefully check that the water is now hot. If the water remains cold carry out **Before Servicing** procedure and re-examine the connections to the component being tested.

When all service work is completed and the oven is fully assembled, the microwave power output should be checked and microwave leakage test should be carried out.

MICROWAVE MEASUREMENT PROCEDURE

A. Requirements:

1) Microwave leakage limit (Power density limit): The power density of microwave radiation emitted by a microwave oven should not exceed 1mW/cm^2 at any point 5cm or more from the external surface of the oven, measured prior to acquisition by a purchaser, and thereafter (through the useful life of the oven), 5 mW/cm^2 at any point 5cm or more from the external surface of the oven.
2) Safety interlock switches: Primary interlock relay and door sensing switch shall prevent microwave radiation emission in excess of the requirement as above mentioned, secondary interlock switch shall prevent microwave radiation emission in excess of 5 mW/cm^2 at any point 5cm or more from the external surface of the oven.

B. Preparation for testing:
Before beginning the actual measurement of leakage, proceed as follows:
1) Make sure that the actual instrument is operating normally as specified in its instruction booklet.

   Important:
   Survey instruments that comply with the requirement for instrumentation as prescribed by the performance standard for microwave ovens, 21 CFR 1030.10(c)(3)(i), must be used for testing.

2) Place the oven tray in the oven cavity.
3) Place the load of 275±15 ml (9.8 oz) of tap water initially at 20±5˚C (68˚F) in the center of the oven cavity.
   The water container shall be a low form of 600 ml (20 oz) beaker with an inside diameter of approx. 8.5 cm (3-1/2 in.) and made of an electrically nonconductive material such as glass or plastic.
   The placing of this standard load in the oven is important not only to protect the oven, but also to insure that any leakage is measured accurately.
4) Set the cooking control on Full Power Cooking Mode
5) Close the door and select a cook cycle of several minutes. If the water begins to boil before the survey is completed, replace it with 275 ml of cool water.

C. Leakage test:

Closed-door leakage test (microwave measurement)
1) Grasp the probe of the survey instrument and hold it perpendicular to the gap between the door and the body of the oven.
2) Move the probe slowly, not faster than 1 in./sec. (2.5 cm/sec.) along the gap, watching for the maximum indication on the meter.
3) Check for leakage at the door screen, sheet metal seams and other accessible positions where the continuity of the metal has been breached (eg., around the switches, indicator, and vents).
   While testing for leakage around the door pull the door away from the front of the oven as far as is permitted by the closed latch assembly.
4) Measure carefully at the point of highest leakage and make sure that the highest leakage is no greater than 4mW/cm^2, and that the secondary interlock switch does turn the oven OFF before any door movement.

NOTE: After servicing, record data on service invoice and microwave leakage report.

SERVICE MANUAL

SHARP

COMMERCIAL
MICROWAVE OVEN

R-25JT-F

FOREWORD

This Manual has been prepared to provide Sharp Electronics Corp. Service Personnel with Operation and Service Information for the SHARP MICROWAVE OVENS, R-25JT-F.

It is recommended that service personnel carefully study the entire text of this manual so that they will be qualified to render satisfactory customer service.

Check the interlock switches and the door seal carefully. Special attention should be given to avoid electrical shock and microwave radiation hazard.

WARNING

Never operate the oven until the following points are ensured.
(A) The door is tightly closed.
(B) The door brackets and hinges are not defective.
(C) The door packing is not damaged.
(D) The door is not deformed or warped.
(E) There is no other visible damage with the oven.

Servicing and repair work must be carried out only by trained service personnel.

DANGER

Certain initial parts are intentionally not grounded and present a risk of electrical shock only during servicing. Service personnel - Do not contact the following parts while the appliance is energized;
High Voltage Capacitor, Power Transformer, Magnetron, High Voltage Rectifier Assembly, High Voltage Harness;
If provided, Vent Hood, Fan assembly, Cooling Fan Motor.

All the parts marked "*" on parts list are used at voltages more than 250V.

Removal of the outer wrap gives access to voltage above 250V.

All the parts marked "Δ" on parts list may cause undue microwave exposure, by themselves, or when they are damaged, loosened or removed.

SHARP ELECTRONICS CORPORATION

SHARP PLAZA, MAHWAH,
NEW JERSEY 07430-2135

PRODUCT DESCRIPTION
GENERAL INFORMATION
OPERATION
TROUBLESHOOTING GUIDE AND TEST PROCEDURE
TOUCH CONTROL PANEL
COMPONENT REPLACEMENT AND ADJUSTMENT PROCEDURE
WIRING DIAGRAM
PARTS LIST

SPECIFICATION

ITEM	DESCRIPTION
Power Requirements	230/208 Volts 3.2 kW Approx. 15.5 A at 208 V / Approx. 14.5 A at 230 V 60 Hertz / Single phase, 3 wire grounded
Power Output	2100 watts (IEC 705 Test Procedure) Operating frequency of 2450MHz
Case Dimensions	Width 20-1/8" (510mm) Height 13-1/4" (335mm) Depth 18-1/2" (470mm)
Cooking Cavity Dimensions	Width 13" (330mm) Height 7-1/8" (180mm) Depth 13" (330mm)
Control Complement	Touch Control System Digital Display 10 Number Pads STOP/CLEAR pad START pad SELECTAPOWER pad (Power level: 0 to 100%) SELECTATIME pad DOUBLE QUANTITY pad EXPRESS DEFROST pad Memory SET pad Memory CHECK pad SIGNAL pad
Weight	Approx. 68 lbs/ 31 kg
Safety Standard	UL Listed FCC Authorized DHHS Rules, CFR, Title 21, Chapter 1, Subchapter J NSF Certified

GENERAL INFORMATION

GROUNDING INSTRUCTIONS

This appliance must be grounded. In the event of an electrical short circuit, grounding reduces the risk of electric shock by providing an escape wire for the electric current. This appliance is equipped with a cord having a grounding wire with a grounding plug. The plug must be plugged into an outlet that is properly installed and grounded.

WARNING: Improper use of the grounding plug can result in a risk of electric shock. The electrical requirements are 230/208 Volt, 60 Hz, AC only, and 20 Amp or more fused electrical supply. It is recommended that a separate circuit serving only this appliance be provided. When installing this appliance, observe all applicable codes and ordinances. If it is necessary to use an extension cord, use only a 3-wire extension cord that has a 3-blade grounding plug and a 3-slot receptacle that will accept the plug on the appliance. The marked rating of the extension cord should be AC 230/208 Volt 20 Amp.

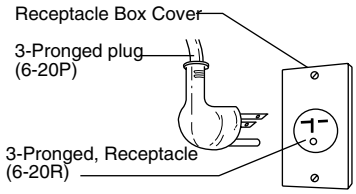

VOLTAGE SELECT

The oven has been preset for 230V operation.
If you need to change this oven for 208V operation, follow instructions below.

1. Unplug oven.
2. Remove one screw(A) from the Voltage Select Cover located on back of the oven near the bottom.
3. Remove the Voltage Select Cover and rotate 180 degrees.
4. Reinstall the Voltage Select Cover using one screw(A) removed in Step 2.
5. Plug power cord into wall outlet.

Your oven is now ready for 208V, 60Hz operation.

Note: If “EE4” or “EE5” appears in the lighted digital display, a voltage adjustment must be made.

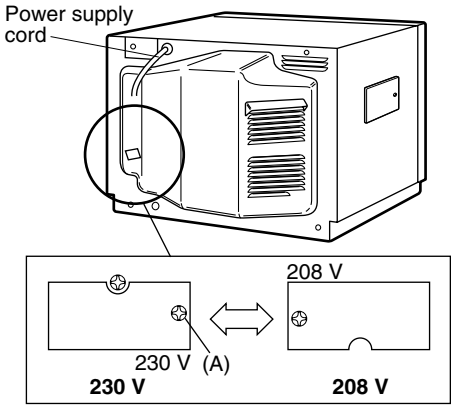

OVEN DIAGRAM

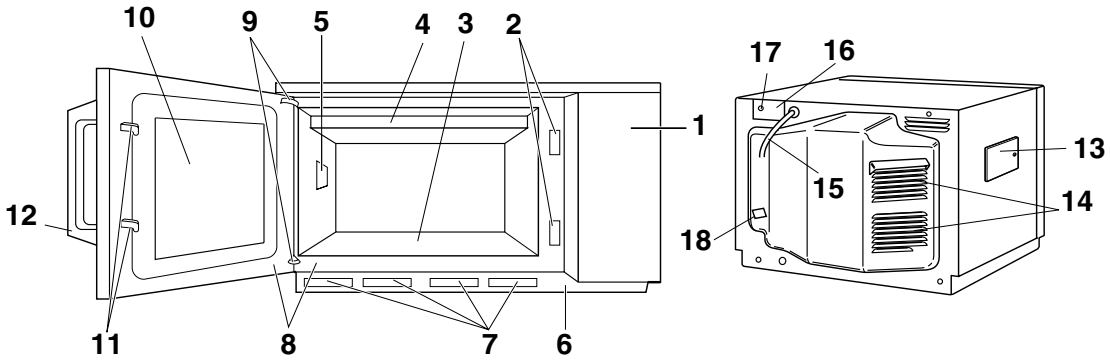

1. Touch control panel
2. Door latch openings
3. Ceramic shelf
4. Splash cover
5. Oven light
6. Air intake filter
7. Air intake openings
8. Door seals and sealing surfaces
9. Door hinges
10. Oven door with see-through window
11. Door latches
12. Door handle
13. Service window for replacing the oven light bulb.
14. Ventilation openings
15. Power supply cord
16. Mounting plate
17. Screw for mouning plate
18. Voltage select cover

Control Panel

19. DOUBLE QUANTITY pad
20. EXPRESS DEFROST pad
21. Ten number pads for time and memory programming
22. SELECTATIME pad
23. STOP/CLEAR pad; touch to stop operation of oven and clear remaining heating time
24. SELECTAPOWER pad for setting variable power level
25. START pad; touch to operate oven after door is closed and time is set
26. SET pad for setting memory
27. CHECK pad for checking memory
28. SIGNAL pad for setting signal sound

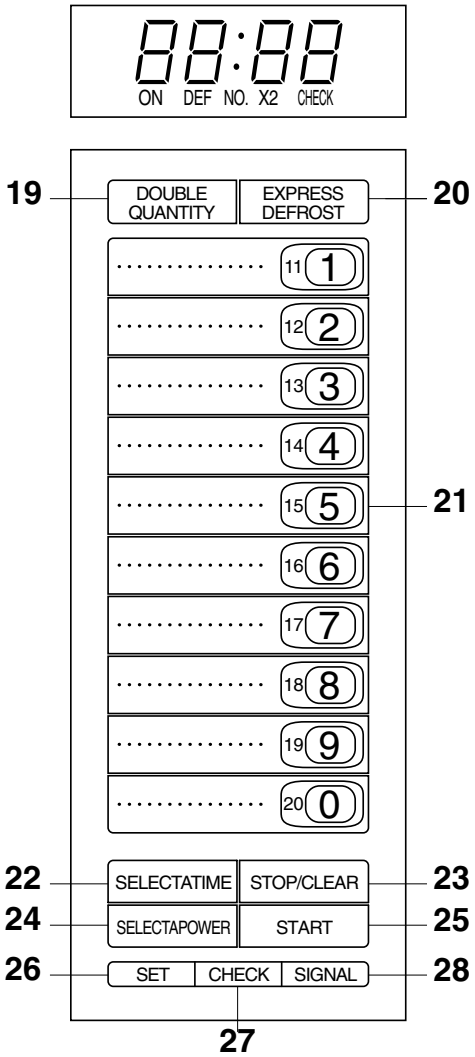

OPERATION

DESCRIPTION OF OPERATING SEQUENCE

The following is a description of component functions during oven operation.

OFF CONDITION

Closing the door activates the door sensing switch and secondary interlock switches (1), (2). (In this condition, the monitor switches (1) & (2) contacts are opened.) When the oven is plugged in, and the rated voltage is supplied to the control unit through the noise filter, (figure O-1), the display will show " . ".

IDLE CONDITION

When the door is opened, the contacts of the door sensing switch open, initiating the following:

1. A signal is input to the control unit energizing the coil of shut-off relay (RY-1).
2. The shut-off relay (RY-1) contacts close completing circuits to turn on the oven lamp, blower motor and stirrer motors.
3. If the door remains open, 60 seconds later the control unit de-energizes shut-off relay (RY-1) turning off the oven lamp, blower motor and stirrer motors.

When the door is closed, the door sensing switch contacts close. With the closing of the door sensing switch contacts, an additional circuit is provided which will permit the operation of the oven when one of the touch pads is depressed. Since the control is enabled through the door sensing switch, the door must be closed before the touch pads will be effective. When the door is closed, a full 60 second IDLE condition is always provided for selecting and pressing the desired touch pads. A 60 second IDLE condition will also follow the end of each cook cycle.

COOKING CONDITION

When the door is closed from the open position and Memory pad is touched the, following will occur:

1. The contacts of relays are closed and components connected to the relays are turned on (For details, refer to Figure O-3)
2. Rated voltage is supplied to the primary winding of the power transformer and is converted to about 3.15 volts output on the filament winding, and approximately 2305 volts on the high voltage winding.
3. The filament winding voltage heats the magnetron filament and the H.V. winding voltage is sent to a voltage doubler circuit.
4. The microwave energy produced by the magnetron is channelled through the waveguide into the cavity feed-box, and then into the cavity where the food is placed to be cooked.
5. Upon completion of the cooking time, the oven will revert to the IDLE condition.
6. When the door is opened during a cook cycle, monitor switches (1) & (2), door sensing switch, secondary interlock switches (1), (2) and primary interlock relays (1), (2) are activated with the following results. The circuits to the high voltage components are de-energized, and the digital read-out displays " . " and cooking is cancelled (in the case of Memory cooking).
7. The monitor switch (1) is electrically monitoring the operation of the secondary interlock switch (1) and primary interlock relay (1), and monitor switch (2) is electrically monitoring the operation of the secondary interlock switch (2) and primary interlock relay (2), and monitor switches (1), (2) are mechanically associated with the door so that it will function in the following sequence.

(1) When the door opens from a closed position, the contacts of the primary interlock relays (1), (2) and secondary interlock switches (1), (2) open. Then the monitor switch contacts close.

(2) When the door is closed from the open position, the monitor switches (1), (2) contacts first open, and then the contacts of the secondary interlock switches (1), (2) close.

If the secondary interlock switches (1), (2) and primary interlock relays (1), (2) fail with their contacts closed when the door is opened, the closing of the monitor switches (1), (2) contacts will form a short circuit through the monitor fuse, secondary interlock switches (1), (2) and primary interlock relays (1), (2), causing the monitor fuse to blow.

VARIABLE POWER COOKING

When Variable Cooking Power is programmed, the rated voltage A.C. is supplied to the power transformer intermittently through the contacts of relay (RY-2, RY-3). Relays RY-2 and RY-3 are operated by the control unit within an interval second time base. Microwave power operation is as follows:

POWER LEVEL	ON TIME	OFF TIME
100%	32 sec.	0 sec.
90%	30 sec.	2 sec.
80 %	26 sec.	6 sec.
70%	24 sec.	8 sec.
60%	22 sec.	10 sec.
50%	18 sec.	14 sec.
40%	16 sec.	16 sec.
30%	12 sec.	20 sec.
20%	8 sec.	24 sec.
10%	6 sec.	26 sec.
0%	0 sec.	32 sec.

Note: The ON/OFF time ratio does not exactly correspond with the percentage of microwave power, because approx. 2 seconds are needed for heating of the magnetron filament.

TWO MAGNETRON OPERATION SYSTEM

Two magnetrons (1), (2) are equipped in order to get higher microwave power output. The primary windings of the power transformers (1), (2) are connected so that each magnetron can be oscillated alternatively according to the frequency of the power supply. Refer to the Figure B-1.

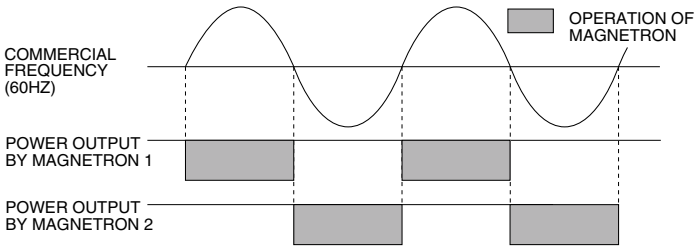

Figure B-1. Operation of Magnetron

SCHEMATIC

NOTE: CONDITION OF OVEN

1. DOOR CLOSED OR 1 MINUTE AFTER COOK OFF
2. " . " APPEARS ON DISPLAY

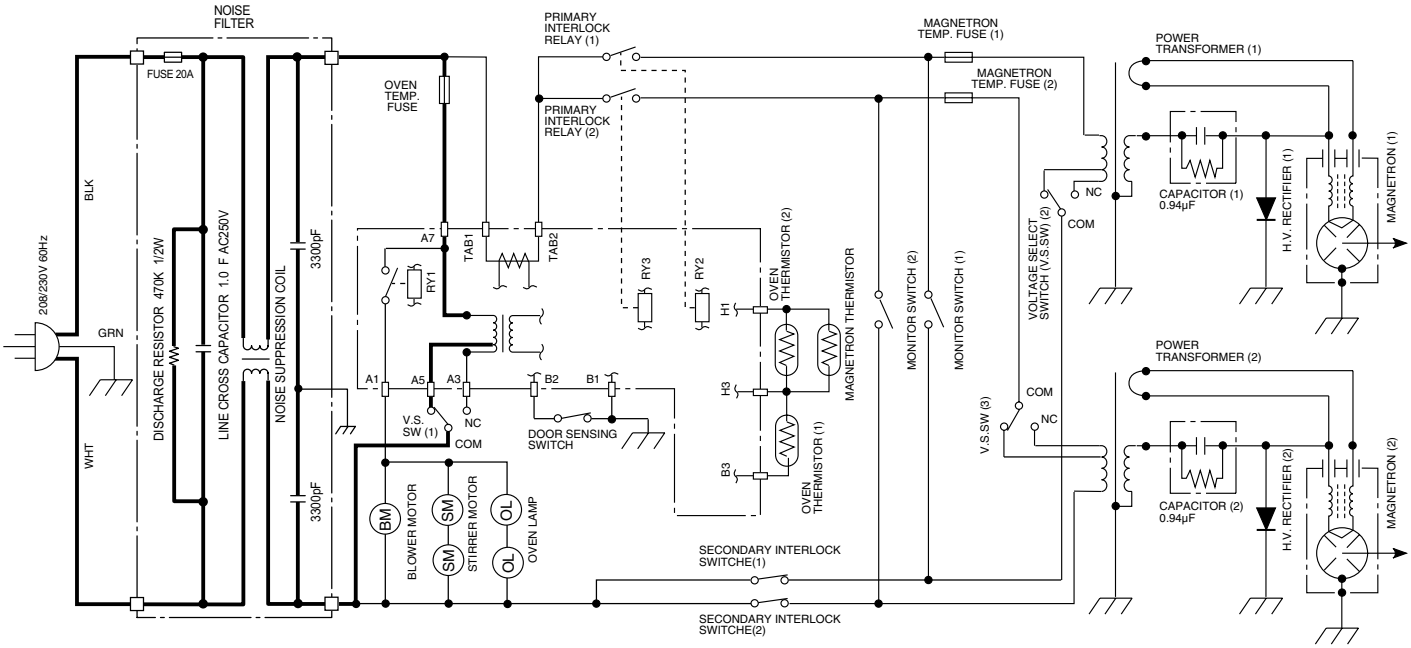

Figure O-1. Oven Schematic-OFF Condition (208 V Condition)

SCHEMATIC

NOTE: CONDITION OF OVEN

1. FOR 1MINUTE AFTER DOOR OPENED.
2. " . " APPEARS ON DISPLAY.

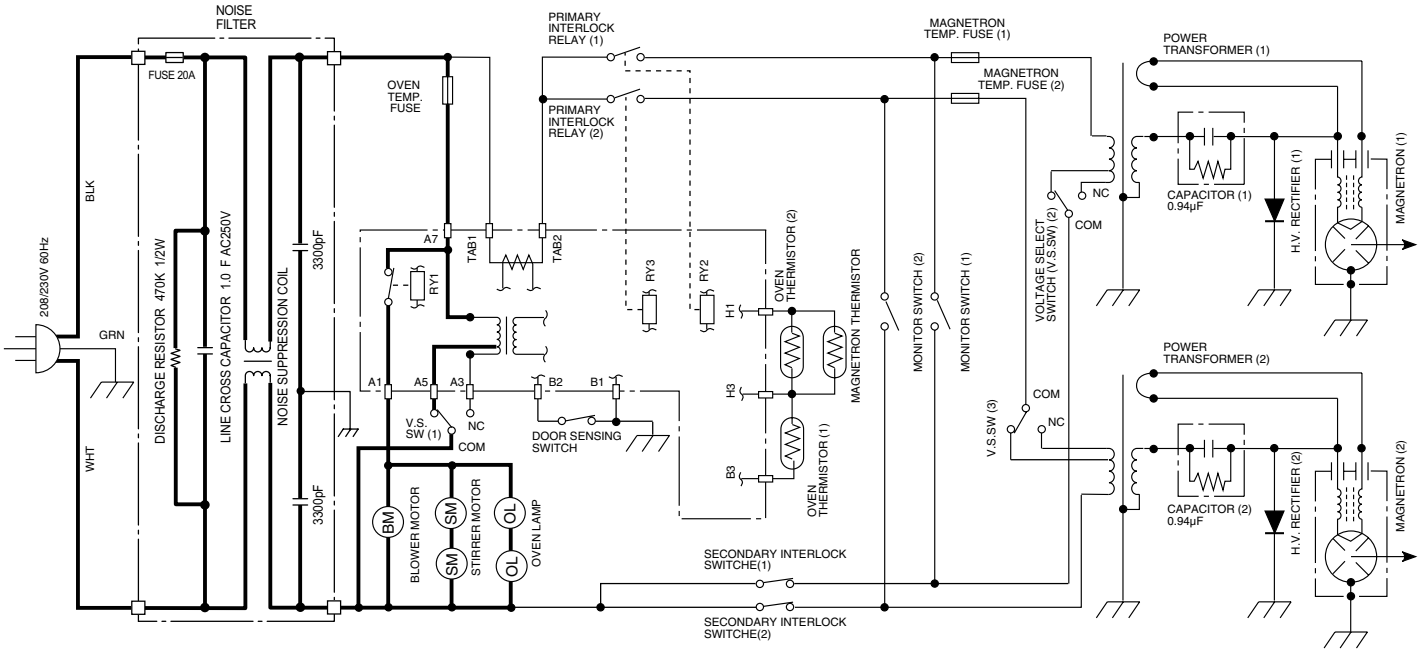

Figure O-2. Oven Schematic-IDLE Condition (208 V Condition)

SCHEMATIC

NOTE: CONDITION OF OVEN

1. DOOR CLOSED.
2. SELECTATIME PAD TOUCHED.
3. COOKING TIME PROGRAMMED.
4. START PAD TOUCHED.

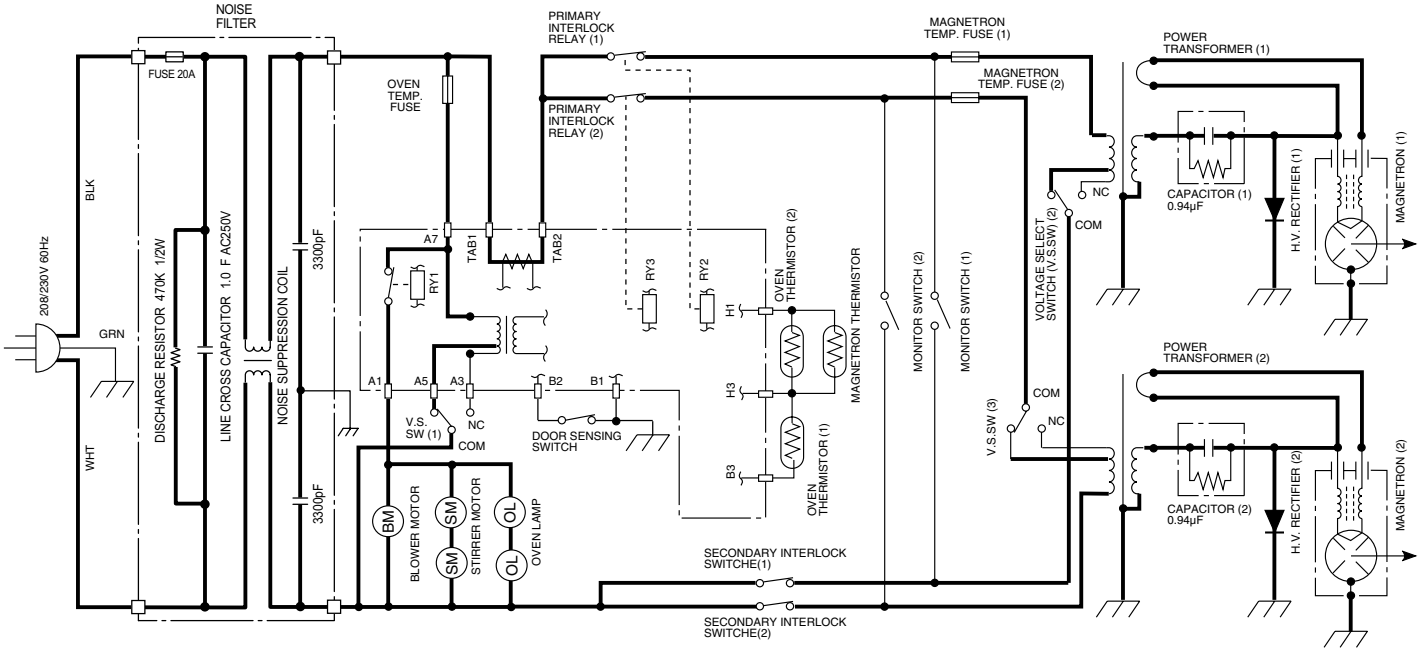

Figure O-3. Schematic-Cooking Condition (208 V Condition)

DESCRIPTION AND FUNCTION OF COMPONENTS

DOOR OPEN MECHANISM

1. The door release lever is pulled.
2. The upper latch head is lifted up by the linked door release lever.
3. The latch lever is lifted up by the door release lever.
4. The joint lever is lifted up by the latch lever.
5. The lower latch head is lifted up by the joint lever.
6. Now both latch heads are lifted up, so they can be released from the latch hook.
7. Now the door can be opened.

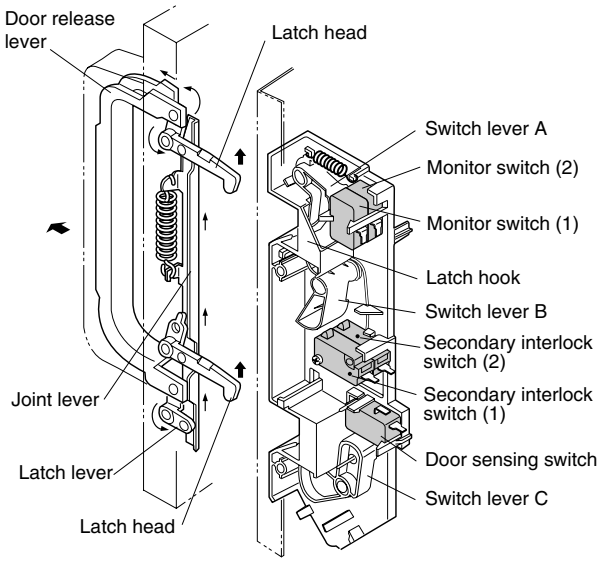

Figure D-1. Door Open Mechanism

DOOR SENSING SWITCH

The door sensing switch is activated by the latch head of the door and switch lever C. When the door is opened, the contacts of the switch open and interrupt the circuit to the coils of the primary interlock relays (1), (2). The contacts of the primary relays (1), (2) then open and interrupt the circuit to the primary winding of the power transformers. At this time, the contacts of relay RY1 close and the blower motor, stirrer motors and oven lamps are energized for 1 minute.

SECONDARY INTERLOCK SWITCHES (1), (2)

The secondary interlock switches (1), (2) are activated by the upper latch head of the door and switch lever B. When the door is opened, the contacts of the switch open and interrupt the circuit to the primary winding of the power transformers (1), (2).

MONITOR SWITCHES (1), (2)

The monitor switches (1), (2) are mounted in the upper position of the latch hook. The monitor switches are activated by the upper latch head of the door and switch lever A. When the door is opened, the contacts of the monitor switches close. Monitor switch (1) is intended to render the oven inoperative by means of blowing the monitor fuse, when the contacts of the primary interlock relay (1) and secondary interlock switch (1) fail to open when the door is opened. Monitor switch (2) is intended to render the oven inoperative by means of blowing the monitor fuse, when the contacts of the primary interlock relay (2) and secondary interlock switch (2) fail to open when the door is opened.

Functions:

With the door shut, the contacts of the door sensing switch and the secondary interlock switches (1), (2) are closed and the contacts of the monitor switches (1), (2) are open.

1. When the door is opened, the contact of the door sensing switch and secondary interlock switches (1), (2) are opened first, then the contact of the monitor switches (1), (2) are closed.
2. As the door goes to a closed position, the contacts of the monitor switches (1), (2) are opened first, then the contacts of the door sensing switch and the secondary interlock switches (1), (2) close.
3. If the door is opened, and the contacts of the primary interlock relay and secondary interlock switch of the same circuit fail to open, the monitor fuse blows simultaneously with closing of the monitor switch contacts of that circuit (1 or 2).

CAUTION: BEFORE REPLACING A BLOWN MONITOR FUSE TEST THE DOOR SENSING SWITCH, PRIMARY INTERLOCK RELAYS (1), (2), SECONDARY INTERLOCK SWITCHES (1), (2) AND MONITOR SWITCHES (1), (2) FOR PROPER OPERATION. (REFER TO CHAPTER "TEST PROCEDURE").

NOTE: MONITOR FUSE AND SWITCH ARE REPLACED AS AN ASSEMBLY.

MAGNETRON TEMPERATURE FUSES (1), (2)

The temperature fuses (1), (2) located on the top of the upper and lower waveguide, are designed to prevent damage to the magnetrons (1), (2). If an over heated condition develops in the tube due to blower motor failure, obstructed air ducts, dirty or blocked air intake, etc., the circuit to the magnetrons are interrupted. Under normal operation, the temperature fuses remains closed. However, when abnormally high temperatures are generated within the magnetron, the temperature fuse will open at 302˚F (150˚C) causing the microwave energy to stop. The defective temperature fuse must be replaced with new rated one.

OVEN TEMPERATURE FUSE

The temperature fuse, located on the side of the exhaust duct assembly, is designed to prevent damage to the oven by fire. If the food load is overcooked, by either error in cook time or defect in the control unit, the temperature fuse will open. Under normal operation, the oven temperature fuse remains closed. However, when abnormally high temperatures are generated within the oven cavity, the oven temperature fuse will open at 248˚F (120˚C), causing the oven to shut down. The defective temperature fuse must be replaced with new rated one.

OVEN THERMISTOR (1)

The thermistor is a negative temperature coefficient type. The temperature in the exhaust duct is detected through the resistance of the thermistor.

If the temperature is high, the control panel will display “EE7” and the oven will stop to avoid overheating and catching fire.

If the thermistor is open, the control panel will display "EE6" and the oven will stop.

OVEN THERMISTOR (2)

This thermistor detects temperature of the oven cavity bottom plate. The thermistor is a negative temperature coefficient type. The temperature is detected through the resistance of the thermistor.
If the temperature is high, the control will display “EE17” and the oven will stop.

MAGNETRON THERMISTOR

The thermistor is a negative temperature coefficient type. The air temperature around the upper magnetron is detected through the resistance of the thermistor.
If the temperature is high, the control panel will display "EE17" and the oven will stop to protect the lower magnetron against overheat.
If the oven thermistor (2) and the magnetron thermistor are open at the same time, the control panel will display "EE16" and the oven will stop.

BLOWER MOTOR

The blower motor drives a blade which draws external cool air into the oven. This cool air is directed through the air vanes surrounding the magnetrons and cools the magnetrons. This air is channelled through the oven cavity to remove steam and vapours given off from the heating foods. It is then exhausted through the exhausting air vents at the oven cavity.

STIRRER MOTORS

The upper and lower stirrer motors drive stirrer antennas to stir the microwave radiation from the upper and lower waveguides.

OVEN LAMPS

The oven cavity light illuminates the interior of the oven so that food being cooked can be examined visually through the door window without having to open the door. The oven lamp is on during the cooking cycle and idle condition.

SELECT SWITCHES (1) - (3)

The select switch assembly is an array of three separate switches which may be configured for either 208V or 230V operation (see General Information section, voltage select). These switches are connected to the windings of components specified in the table below and make those components compatible with the specified line voltage by changing their internal windings. For 208V operation contacts (Normal Open) of the all switches are open.

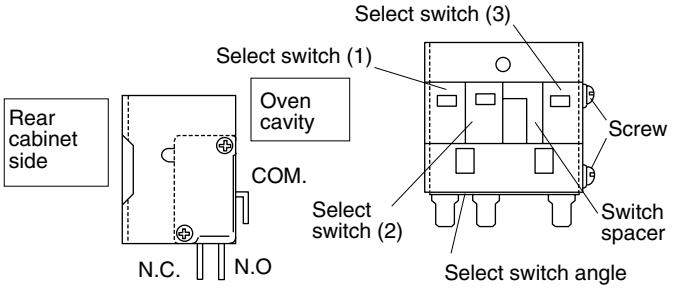

SELECT SWITCH AND ELECTRICAL COMPONENTS CONDITION

SWITCH NO.	ELECTRICAL PARTS
(1)	Touch control unit
(2)	Power transformer (1) (Front side)
(3)	Power transformer (2) (Rear side)

Oven in the 208V setting: contacts between common and normally open are closed.

Oven in the 230V setting: contacts between common and normally closed are closed.

NOISE FILTER

The noise filter prevents the radio frequency interference that might flow back in the power circuit.

TROUBLESHOOTING GUIDE

Never touch any part in the circuit with your hand or an uninsulated tool while the power supply is connected.

When troubleshooting the microwave oven, it is helpful to follow the Sequence of Operation in performing the checks. Many of the possible causes of trouble will require that a specific test be performed. These tests are given a procedure letter which will be found in the "Test Procedure "section.

IMPORTANT: If the oven becomes inoperative because of a blown monitor fuse, check the monitor switches (1), (2), primary interlock relays RY2, RY3, door sensing switch and secondary interlock switches (1), (2), before replacing the monitor fuse. If monitor fuse is replaced, the monitor switch (1) and/or (2) must also be replaced. Use part FFS-BA033WRKZ as an assembly.

IMPORTANT: Whenever troubleshooting is performed with the power supply cord disconnected. It may, in some cases, be necessary to connect the power supply cord after the outer case has been removed, in this event,

1. Disconnect the power supply cord, and then remove outer case.
2. Open the door and block it open.
3. Discharge two high voltage capacitors.
4. Disconnect the leads to the primaries of the two power transformers.
5. Ensure that the leads remain isolated from other components and oven chassis by using insulation tape.
6. After that procedure, reconnect the power supply cord.

When the testing is completed

1. Disconnect the power supply cord, and then remove outer case.
2. Open the door and block it open.
3. Discharge two high voltage capacitors.
4. Reconnect the all leads removed from components during testing.
5. Reinstall the outer case (cabinet).
6. Reconnect the power supply cord after the outer case is installed.
7. Run the oven and check all functions.

CK = Check / RST = Reset / RE = Replace

CONDITION	PROBLEM \ TEST PROCEDURE / POSSIBLE CAUSE AND DEFECTIVE PARTS	A MAGNETRON (1), (2)	B POWER TRANSFORMER (1), (2)	C H.V. RECTIFIER (1), (2)	D HIGH VOLTAGE CAPACITOR (1), (2)	E SECONDARY INTERLOCK SWITCH (1), (2)	F PRIMARY INTERLOCK SYSTEM (1), (2)	F DOOR SENSING SWITCH	G MONITOR SWITCH (1), (2)	I MONITOR FUSE	J MAGNETRON TEMP. FUSE (1), (2)	J OVEN TEMPERATURE FUSE	CK OVEN LAMP OR SOCKET	CK BLOWER MOTOR	H SELECT SWITCH (1)	H SELECT SWITCH (2)	H SELECT SWITCH (3)	K OVEN THERMISTOR (1)	K OVEN THERMISTOR (2)	K MAGNETRON THERMISTOR	L NOISE FILTER	M TOUCH CONTROL PANEL	N KEY UNIT	O RELAY (RY-1)	O RELAY (RY-2)	O RELAY (RY-3)	P OPEN FOIL PATERN ON P.W.B.	CK SITTER MOTORS	CK AIR FLOW BLOCKED	CK LOOSE WIRING	CK SHORT IN POWER SUPPLY CORD	CK NO POWER AT OUTLET	RST LOW POWER SUPPLY VOLTAGE	RST EXCEED MAX. HEATING TIME	CK NO LOAD OPERATION	RST HIGH POWER SUPPLY VOLTAGE
OFF CONDITION	Home fuse blows when power cord is plugged into wall receptacle																														●					
	Monitor fuse blows when power cord is plugged into wall receptacle.						●		●												●					●										
	" . " does not appear in display when power cord is first plugged into wall receptacle.									●		●			●						●						●			●	●	●	●			
	Blower motor does not operate. (Oven lamp(s) and stirrer motors go on for 1 minute after door is opened.)													●																●						
	Blower motor, oven lamp(s) and stirrer motors do not go on for 1 minute after door is opened.							●														●		●												
	Blower motor and stirrer motors go on but oven lamp(s) do not light for 1 minute after door is opened.												●																	●						
	Blower motor, oven lamp(s) and stirrer motors keep going on after more than 1 minute when door is opened and closed.							●														●		●												
COOKING CONDITION	Blower motor, oven lamp(s) and stirrer motors do not go on in cook cycle.							●														●		●												
	Oven goes into a cook cycle but shuts down before and off cooking cycle.											●																	●							
	Oven does not go into cook cycle when START pad is touched.						●	●														●	●							●						
	Low or no power is produced during cooking condition. (The food is heated incompletely or not heated at all.)	●	●	●	●	●	●				●					●	●					●			●	●				●			●			
	Extremely uneven heating is produced in oven load (food).																											●		●						
	Variable cooking does not operates properly, except HIGH power functions.																					●														
ERROR MODE	"EE1" Magnetron (1) failure.	(1)	(1)	(1)	(1)		(1)				(1)					●						●			●					●						
	"EE2" Magnetron (2) failure.	(2)	(2)	(2)	(2)		(2)				(2)						●					●				●				●						
	"EE3" Magnetron (1) and (2) failure.	●	●	●	●	●	●				●					●	●					●			●	●				●						
	"EE4" Voltage is too high.																					●														●
	"EE5" Voltage is too low.																					●											●			
	"EE6" Oven thermistor (1) failure.																	●				●								●						
	"EE7" Exhaust air temperature is too high.													●				●				●							●							
	"EE8" Relay melt short.																								●	●										
	"EE9" Maximum time is exceeded.																																	●		
	"EE16" Oven thermistor (2) and Magnetron thermistor are open.																		●	●		●								●						
	"EE17" Magnetron temperature is too high.													●					●	●		●													●	

TEST PROCEDURES

PROCEDURE LETTER	COMPONENT TEST

A **MAGNETRON ASSEMBLY TEST**

1. Disconnect the power supply cord, and then remove outer case.
2. Open the door and block it open.
3. Discharge two high voltage capacitors.
4. To test for an open filament, isolate the magnetron from the high voltage circuit. A continuity check across the magnetron filament leads should indicate less than 1 ohm.
5. To test for a shorted magnetron, connect the ohmmeter leads between the magnetron filament leads and chassis ground. This test should indicate an infinite resistance. If there is little or no resistance the magnetron is grounded and must be replaced.
6. Reconnect all leads removed from components during testing.
7. Reinstall the outer case (cabinet).
8. Reconnect the power supply cord after the outer case is installed.
9. Run the oven and check all functions.

MICROWAVE OUTPUT POWER

The following test procedure should be carried out with the microwave oven in a fully assembled condition (outer case fitted).

HIGH VOLTAGES ARE PRESENT DURING THE COOK CYCLE, SO EXTREME CAUTION SHOULD BE OBSERVED.

Power output of the magnetron can be measured by performing a water temperature rise test. This test should only be used if above tests do not indicate a faulty magnetron and there is no defect in the following components or wiring: silicon rectifier, high voltage capacitor and power transformer. This test will require a 16 ounce (453cc) measuring cup and an accurate mercury thermometer or thermocouple type temperature tester. For accurate results, the following procedure must be followed carefully:

1. Fill the measuring cup with 16 oz. (453cc) of tap water and measure the temperature of the water with a thermometer or thermocouple temperature tester. Stir the thermometer or thermocouple through the water until the temperature stabilizes. Record the temperature of the water.
2. Place the cup of water in the oven. Operate oven at 100% POWER selecting more than 60 seconds cook time. Allow the water to heat for 60 seconds, measuring with a stop watch, second hand of a watch or the digital read-out countdown.
3. Remove the cup from the oven and again measure the temperature, making sure to stir the thermometer or thermocouple through the water until the maximum temperature is recorded.
4. Subtract the cold water temperature from the hot water temperature. The normal result should be 55.4 to 103˚F(30.8 to 57.2˚C) rise in temperature. If the water temperatures are accurately measured and tested for the required time period the test results will indicate if the magnetron tube has low power output (low rise in water temperature) which would extend cooking time or high power output (high rise in water temperature) which would reduce cooking time. Because cooking time can be adjusted to compensate for power output, the magnetron tube assembly should be replaced only if the water temperature rise test indicates a power output well beyond the normal limits. The test is only accurate if the power supply line voltage is 208/230 volts and the oven cavity is clean.

B **POWER TRANSFORMER TEST**

1. Disconnect the power supply cord, and then remove outer case.
2. Open the door and block it open.
3. Discharge two high voltage capacitors.
4. Disconnect the primary input terminals and measure the resistance of the transformer with an ohmmeter. Check for continuity of the coils with an ohmmeter. On the R x 1 scale, the resistance of the primary coil should be less than 1 ohm and the resistance of the high voltage coil should be approximately 57 ohms; the resistance of the filament coil should be less than 1 ohm.
5. Reconnect all leads removed from components during testing.
6. Reinstall the outer case (cabinet).
7. Reconnect the power supply cord after the outer case is installed.
8. Run the oven and check all functions.

TEST PROCEDURES

PROCEDURE LETTER	COMPONENT TEST
	(HIGH VOLTAGES ARE PRESENT AT THE HIGH VOLTAGE TERMINAL, SO DO NOT ATTEMPT TO MEASURE THE FILAMENT AND HIGH VOLTAGE.)
C	**HIGH VOLTAGE RECTIFIER (1) AND/ OR (2) TEST** 1. Disconnect the power supply cord, and then remove outer case. 2. Open the door and block it open. 3. Discharge two high voltage capacitors. 4. Isolate the rectifier from the circuit. Using the highest ohm scale of the meter, read the resistance across the terminals and observe, reverse the leads to the rectifier terminals and observe meter reading. If a short is indicated in both directions, or if an infinite resistance is read in both directions, the rectifier is probably defective and should be replaced. 5. Reconnect all leads removed from components during testing. 6. Reinstall the outer case (cabinet). 7. Reconnect the power supply cord after the outer case is installed. 8. Run the oven and check all functions. **NOTE: Be sure to use an ohmmeter that will supply a forward bias voltage of more than 6.3 volts.**
D	**HIGH VOLTAGE CAPACITOR (1) AND/ OR (2) TEST** 1. Disconnect the power supply cord, and then remove outer case. 2. Open the door and block it open. 3. Discharge two high voltage capacitors. 4. If the capacitor is open, no high voltage will be available to the magnetron. Disconnect input leads and check for a short or open between the terminals using an ohmmeter. Checking with a high ohm scale, if the high voltage capacitor is normal, the meter will indicate continuity for a short time and should indicate an open circuit once the capacitor is charged. If the above is not the case, check the capacitor with an ohmmeter to see if it is shorted between either of the terminals and case. If it is shorted, replace the capacitor. 5. Reconnect all leads removed from components during testing. 6. Reinstall the outer case (cabinet). 7. Reconnect the power supply cord after the outer case is installed. 8. Run the oven and check all functions.
E	**SECONDARY INTERLOCK SWITCH (1) AND/ OR (2) TEST** 1. Disconnect the power supply cord, and then remove outer case. 2. Open the door and block it open. 3. Discharge two high voltage capacitors. 4. Isolate the switch and connect the ohmmeter to the common (COM.) and normally open (NO) terminal of the switch. The meter should indicate an open circuit with the door open and a closed circuit with the door closed. If improper operation is indicated, replace the secondary interlock switch. 5. Reconnect all leads removed from components during testing. 6. Reinstall the outer case (cabinet). 7. Reconnect the power supply cord after the outer case is installed. 8. Run the oven and check all functions.
F	**PRIMARY INTERLOCK SYSTEM TEST** DOOR SENSING SWITCH 1. Disconnect the power supply cord, and then remove outer case. 2. Open the door and block it open. 3. Discharge two high voltage capacitors. 4. Isolate the switch and connect the ohmmeter to the common (COM.) and normally open (NO) terminal of the switch. The meter should indicate an open circuit with the door open and a closed circuit with the door closed. If improper operation is indicated, replace the door sensing switch. 5. Reconnect all leads removed from components during testing. 6. Reinstall the outer case (cabinet). 7. Reconnect the power supply cord after the outer case is installed.

TEST PROCEDURES

PROCEDURE LETTER	COMPONENT TEST

8. Run the oven and check all functions.

NOTE: If the door sensing switch contacts fail in the open position and the door is closed, the blower motor, stirrer motors and oven light will be activated by RY1.

PRIMARY INTERLOCK RELAY (RY2, RY3)

1. Disconnect the power supply cord, and then remove outer case.
2. Open the door and block it open.
3. Discharge two high voltage capacitors.
4. Disconnect two (2) wire leads from the male tab terminals of the Primary Interlock Relay RY2 and/or RY3. Check the state of the relay contacts using a ohmmeter. The relay contacts should be open. If the relay contacts are closed, replace the circuit board entirely or the relay itself.
5. Reconnect all leads removed from components during testing.
6. Reinstall the outer case (cabinet).
7. Reconnect the power supply cord after the outer case is installed.
8. Run the oven and check all functions.

G **MONITOR SWITCH (1) AND/ OR (2) TEST**

1. Disconnect the power supply cord, and then remove outer case.
2. Open the door and block it open.
3. Discharge two high voltage capacitors.
4. Before performing this test, make sure that the secondary interlock switches (1), (2) and the primary interlock relays RY2, RY3 are operating properly, according to the above Switch Test Procedure. Disconnect the wire lead from the monitor switches (1), (2) (COM) terminals. Check the monitor switches (1), (2) operation by using the ohmmeter as follows. When the door is open, the meter should indicate a closed circuit. When the monitor switch actuator is pushed by a screw driver through the upper latch hole on the front plate of the oven cavity with the door opened (in this condition the plunger of the monitor switch is pushed in), the meter should indicate an open circuit. If improper operation is indicated, the switch may be defective. After testing the monitor switches, reconnect the wire lead to the monitor switch (COM) terminals and check the continuity of the monitor circuit.
5. Reconnect all leads removed from components during testing.
6. Reinstall the outer case (cabinet).
7. Reconnect the power supply cord after the outer case is installed.
8. Run the oven and check all functions.

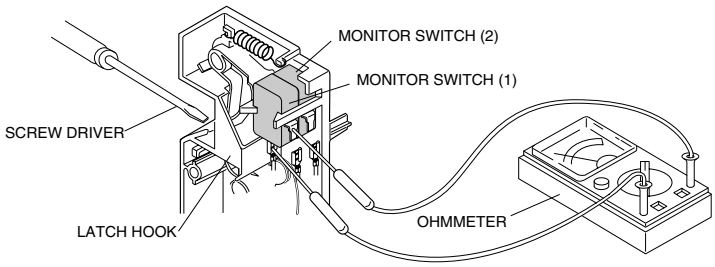

H **VOLTAGE SELECT SWITCHES TEST**

1. Disconnect the power supply cord, and then remove outer case.
2. Open the door and block it open.
3. Discharge two high voltage capacitors.
4. Isolate switch and check the contacts by using an ohmmeter with following table. If improper operation is indicated, make the necessary switch adjustment or replacement.

Table: Switch Connection

Plunger operation	Between COM. and NO.	Between COM. and NC.
Plunger released	Open circuit	Close circuit
Plunger operation	Close circuit	Open circuit

COM.: Common terminal
NO.: Normal Open terminal
NC.: Normal Close terminal

5. Reconnect all leads removed from components during testing.
6. Reinstall the outer case (cabinet).
7. Reconnect the power supply cord after the outer case is installed.
8. Run the oven and check all functions.

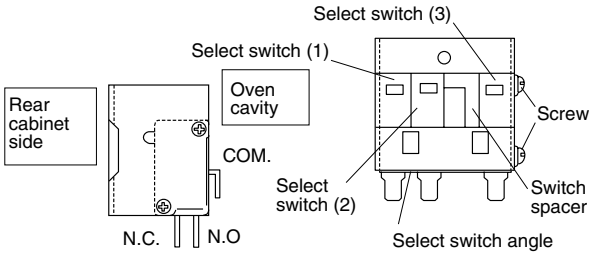

TEST PROCEDURES

PROCEDURE LETTER	COMPONENT TEST

I **BLOWN MONITOR FUSE TEST**

1. Disconnect the power supply cord, and then remove outer case.
2. Open the door and block it open.
3. Discharge two high voltage capacitors.
4. If the monitor fuse is blown when the door is opened, check the primary interlock relays RY2, RY3, secondary interlock switches (1), (2) and monitor switches (1), (2) according to the "TEST PROCEDURE" for those switches before replacing the blown monitor fuse.

CAUTION: BEFORE REPLACING A BLOWN MONITOR FUSE, TEST THE PRIMARY INTERLOCK RELAYS, SECONDARY INTERLOCK SWITCHES, DOOR SENSING SWITCH AND MONITOR SWITCHES FOR PROPER OPERATION.

If the monitor fuse is blown by improper switch operation, the monitor fuse and monitor switch must be replaced with "monitor fuse and monitor switch assembly" part number FFS-BA033WRKZ, even if the monitor switch operates normally. The monitor fuse and monitor switch assembly is comprised of a 20 ampere fuse and switch.

5. Reconnect all leads removed from components during testing.
6. Reinstall the outer case (cabinet).
7. Reconnect the power supply cord after the outer case is installed.
8. Run the oven and check all functions.

J **TEMPERATURE FUSE TEST**

1. Disconnect the power supply cord, and then remove outer case.
2. Open the door and block it open.
3. Discharge two high voltage capacitors.
4. A continuity check across the temperature fuse terminals should indicate a closed circuit unless the temperature of the temperature fuse reaches specfied temperature as shown below.

	Open temperature	Close temperature	Display or Condition	Check point
Magnetron temperature fuse (1)	150˚C	Non resetable type	EE1	Magnetron (1) Failure: Test magnetron (1) and Blower fan motor.
Magnetron temperature fuse (2)			EE3	Magnetron (1), (2) Failure: Test magnetron (1), (2). Check blower fan motor and ventilation opening.
			EE2	Magnetron (2) Failure: Test magnetron (2) and Blower fan motor.
Oven temperature fuse	120˚C	Non resetable type	Oven shut off	Food has been burned in oven. Temperature of oven inside is very high.

5. Reconnect all leads removed from components during testing.
6. Reinstall the outer case (cabinet).
7. Reconnect the power supply cord after the outer case is installed.
8. Run the oven and check all functions.

CAUTION: IF THE TEMPERATURE FUSE INDICATES AN OPEN CIRCUIT AT ROOM TEMPERATURE, REPLACE TEMPERATURE FUSE.

K **THERMISTOR TEST**

1. Disconnect the power supply cord, and then remove outer case.
2. Open the door and block it open.
3. Discharge two high voltage capacitors.
4. Follow the procedures below for each thermistor.

4-1. MAGNETRON THERMISTOR TEST

Disconnect connector-H from the CPU unit. And disconnect the connector of the magnetron thermistor from the switch harness. Measure the resistance of the thermistor with an ohmmeter. Connect the ohmmeter leads to the leads of the thermistor.

TEST PROCEDURES

PROCEDURE LETTER	COMPONENT TEST

Room Temp.	59˚F (15˚C)	68˚F (20˚C)	77˚F (25˚C)
Resistance	Approx. 373 kΩ	Approx. 292 kΩ	Approx. 231 kΩ

If the meter does not indicate above resistance, replace the thermistor.

4-2. OVEN THERMISTOR (1) TEST

Disconnect connector-B from the CPU unit. Measure the resistance of the thermistor with an ohmmeter. Connect the ohmmeter leads to the leads of the thermistor.

Room Temp.	59˚F (15˚C)	68˚F (20˚C)	77˚F (25˚C)
Resistance	Approx. 373 kΩ	Approx. 292 kΩ	Approx. 231 kΩ

If the meter does not indicate above resistance, replace the thermistor.

4-3. OVEN THERMISTOR (2) TEST

Disconnect connector-H from the CPU unit. And disconnect the connector of the magnetron thermistor from the switch harness. Measure the resistance of the thermistor with an ohmmeter. Connect the ohmmeter leads to the leads of the thermistor.

Room Temp.	59˚F (15˚C)	68˚F (20˚C)	77˚F (25˚C)
Resistance	Approx. 16 kΩ	Approx. 13 kΩ	Approx. 11 kΩ

If the meter does not indicate above resistance, replace the thermistor.

5. Reconnect all leads removed from components during testing.
6. Reinstall the outer case (cabinet).
7. Reconnect the power supply cord after the outer case is installed.
8. Run the oven and check all functions.

L NOISE FILTER TEST

1. Disconnect the power supply cord, and then remove outer case.
2. Open the door and block it open.
3. Discharge high voltage capacitor.
4. Disconnect the lead wires from the terminal the noise filter. Using an ohmmeter, check between the terminals as described in the following table. If incorrect reading are obtained, replace the noise filter.
5. Reconnect all leads removed from components during testing.
6. Reinstall the outer case (cabinet).
7. Reconnect the power supply cord after the outer case is installed.
8. Run the oven and check all functions.

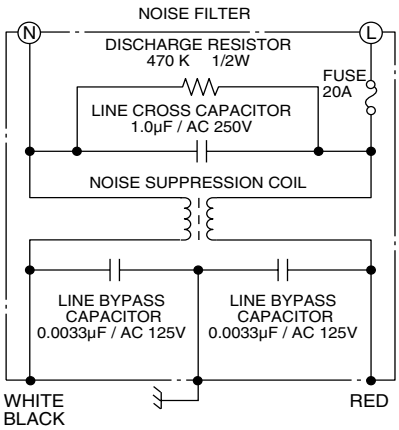

MEASURING POINT	INDICATION OF OHMMETER
Between N and L	Approx. 470 KΩ
Between terminal N and WHITE/ BLACK	Short circuit.
Between terminal L and RED	Short circuit.

M TOUCH CONTROL PANEL ASSEMBLY TEST

The touch control panel consists of circuits including semiconductors such as LSI, ICs, etc. Therefore, unlike conventional microwave ovens, proper maintenance cannot be performed with only a voltmeter and ohmmeter.
In this service manual, the touch control panel assembly is divided into two units, Control Unit and Key Unit, and troubleshooting by unit replacement is described according to the symptoms indicated.

TEST PROCEDURES

PROCEDURE LETTER	COMPONENT TEST

Before testing,

1) Disconnect the power supply cord, and then remove outer case.
2) Open the door and block it open.
3) Discharge two high voltage capacitors.
4) Disconnect the leads to the primary of the power transformer.
5) Ensure that these leads remain isolated from other components and oven chassis by using insulation tape.

1. Key Unit.

NOTE ;

1) Check Key unit ribbon connection before replacement.
2) Reconnect all leads removed from components during testing.
3) Re-install the outer case (cabinet).
4) Reconnect the power supply cord after the outer case is installed.
5) Run the oven and check all functions.

The following symptoms indicate a defective key unit.

a) When touching the pads, a certain pad produces no signal at all.
b) When touching a number pad, two figures or more are displayed.
c) When touching the pads, sometimes a pad produces no signal.

If the Key unit is defective.

1) Disconnect the power supply cord, and then remove outer case.
2) Open the door and block it open.
3) Discharge two high voltage capacitors.
4) Replace the Key unit.
5) Reconnect all leads removed from components during testing.
6) Re-install the outer case (cabinet).
7) Reconnect the power supply cord after the outer case is installed.
8) Run the oven and check all functions.

2. Control Unit

The following symptoms indicate a defective control unit. Before replacing the control unit, perform the Key unit test (Procedure N) to determine if control unit is faulty.

Re-connect the power supply cord. And check for followings.

2-1 In connection with pads.

a) When touching the pads, a certain group of pads do not produce a signal.
b) When touching the pads, no pads produce a signal.

2-2 In connection with display

a) At a certain digit, all or some segments do not light up.
b) At a certain digit, brightness is low.
c) Only one indicator does not light.
d) The corresponding segments of all digits do not light up; or they continue to light up.
e) Wrong figure appears.
f) A certain group of indicators do not light up.
g) The figure of all digits flicker.

2-3 Other possible problems caused by defective control unit.

a) Buzzer does not sound or continues to sound.
b) Cooking is not possible.

When testing is completed,

1) Disconnect the power supply cord, and then remove outer case.
2) Open the door and block it open.
3) Discharge two high voltage capacitors.
4) Reconnect all leads removed from components during testing.
5) Re-install the outer case (cabinet).
6) Reconnect the power supply cord after the outer case is installed.
7) Run the oven and check all functions.

TEST PROCEDURES

PROCEDURE LETTER	COMPONENT TEST

N **KEY UNIT TEST**

1. Disconnect the power supply cord, and then remove outer case.
2. Open the door and block it open.
3. Discharge two high voltage capacitors.
4. If the display fails to clear when the STOP/CLEAR pad is depressed, first verify the flat ribbon cable is making good contact, verify that the door sensing switch (stop switch) operates properly; that is the contacts are closed when the door is closed and open when the door is open. If the door sensing switch (stop switch) is good, disconnect the flat ribbon cable that connects the key unit to the control unit and make sure the door sensing switch is closed (either close the door or short the door sensing switch connecter). Use the Key unit matrix indicated on the control panel schematic and place a jumper wire between the pins that correspond to the STOP/CLEAR pad making momentary contact. If the control unit responds by clearing with a beep the key unit is faulty and must be replaced. If the control unit does not respond, it is faulty and must be replaced. If a specific pad does not respond, the above method may be used (after clearing the control unit) to determine if the control unit or key pad is at fault.
5. Reconnect all leads removed from components during testing.
6. Re-install the outer case (cabinet).
7. Reconnect the power supply cord after the outer case is installed.
8. Run the oven and check all functions.

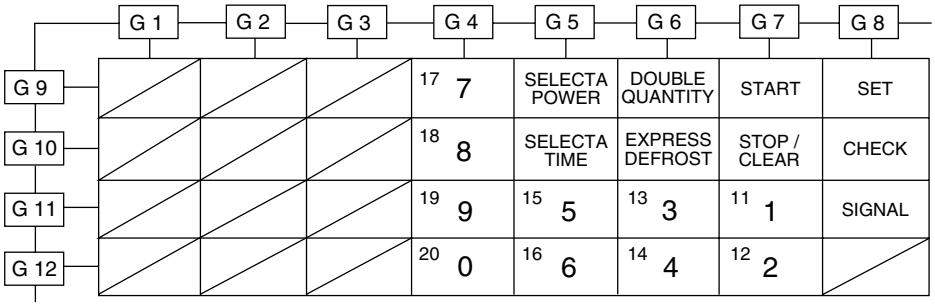

O **RELAY TEST**

1. Disconnect the power supply cord, and then remove outer case.
2. Open the door and block it open.
3. Discharge two high voltage capacitors.
4. Disconnect the leads to the primary of the power transformer.
5. Ensure that these leads remain isolated from other components and oven chassis by using insulation tape.
6. After that procedure, re-connect the power supply cord.
7. Remove the outer case and check voltage between Pins No. 5 (or No. 3 at 230V) and No. 7 of the 7 pin connector (A) on the control unit with an A.C. voltmeter.
   The meter should indicate rated voltage, if not check oven circuit.

RY1, RY2 and RY3 Relay Test

These relays are operated by D.C. voltage

Check voltage at the relay coil with a D.C. voltmeter during the microwave cooking operation.

DC. voltage indicated ..... Defective relay.

DC. voltage not indicated ..... Check diode which is connected to the relay coil. If diode is good, control unit is defective.

RELAY SYMBOL	OPERATIONAL VOLTAGE	CONNECTED COMPONENTS
RY1	Approx. 12.0V D.C.	Oven lamp / Blower motor / Stirrer motors
RY2	Approx. 12.0V D.C.	Power transformer 1
RY3	Approx. 12.0V D.C.	Power transformer 2

8. Disconnect the power supply cord, and then remove outer case.
9. Open the door and block it open.
10. Discharge two high voltage capacitors.
11. Reconnect all leads removed from components during testing.
12. Re-install the outer case (cabinet).

TEST PROCEDURES

PROCEDURE LETTER	COMPONENT TEST

13. Reconnect the power supply cord after the outer case is installed.
14. Run the oven and check all function.

P **FOIL PATTERN ON THE PRINTED WIRING BOARD TEST**

To protect the electronic circuits, this model is provided with a fine foil pattern added to the primary on the PWB, this foil pattern acts as a fuse.

1. Foil pattern check and repairs.
   1) Disconnect the power supply cord, and then remove outer case.
   2) Open the door and block it open.
   3) Discharge two high voltage capacitors.
   4) Follow the troubleshooting guide given below for repair.

STEPS	OCCURRENCE	CAUSE OR CORRECTION
1	Only pattern at "a" is broken.	*Insert jumper wire J1 and solder.
2	Pattern at "a" and "b" are broken.	*Insert the coil RCILF2003YAZZ between "c" and "d".

   5) Make a visual inspection of the varistor. Check for burned damage and examine the transformer with a tester for the presence of layer short-circuit (check the primary coil resistance which is approximately 865Ω ± 10% between 208V terminals and 970Ω ± 10% between 230V terminals). If any abnormal condition is detected, replace the defective parts.

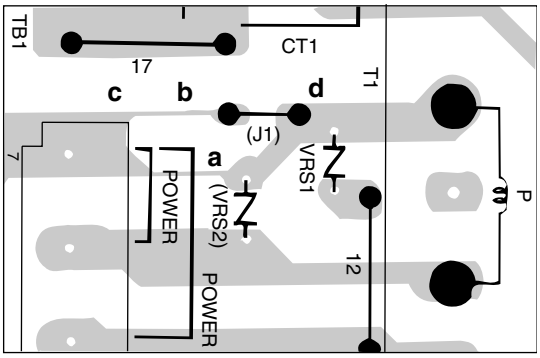

   6) Reconnect all leads removed from components during testing.
   7) Re-install the outer case (cabinet).
   8) Reconnect the power supply cord after the outer case is installed.
   9) Run the oven and check all functions.

2. Follow the troubleshooting guide given below, if indicator does not light up after above check and repairs are finished.
   1) Disconnect the power supply cord, and then remove outer case.
   2) Open the door and block it open.
   3) Discharge two high voltage capacitors.
   4) Disconnect the leads to the primary of the power transformer.
   5) Ensure that these leads remain isolated from other components and oven chassis by using insulation tape.
   6) After that procedure, re-connect the power supply cord.
   7) Follow the troubleshooting guide given below for repair.

STEPS	OCCURRENCE	CAUSE OR CORRECTION
1	The rated AC voltage is not present to power terminal of CPU connector CN-A.	Check supply voltage and oven power cord.
2	The rated AC voltage is present at primary side of low voltage transformer.	Low voltage transformer or secondary circuit defective. Check and repair.

   8) Disconnect the power supply cord, and then remove outer case.
   9) Open the door and block it open.
   10) Discharge two high voltage capacitors.
   11) Reconnect all leads removed from components during testing.
   12) Re-install the outer case (cabinet).
   13) Reconnect the power supply cord after the outer case is installed.
   14) Run the oven and check all functions.

TOUCH CONTROL PANEL ASSEMBLY

OUTLINE OF TOUCH CONTROL PANEL

The touch control section consists of the following units as shown in the touch control panel circuit.

(1) Control Unit
(2) Key Unit

The principal functions of these units and the signals communicated among them are explained below.

1. Control Unit
Signal of key touch and oven function control are all processed by one microcomputer.

1) Power Supply Circuit
This circuit changes output voltage at the secondary side of the low voltage (T1) transformer to voltages required at each part by full wave rectifying circuit, constant voltage circuit, etc..

2) ACL Circuit
This is an Auto-clear Circuit, i.e., a reset circuit, which enables IC1 to be activated from initial state.

3) Power Synchronizing Signal Generating Circuit
This is a circuit for generating power synchronizing signal by virtue of the secondary side output of transformer T1. This signal is used as a basic frequency for time processing.

4) Clock Circuit
This is a circuit for controlling clock frequency required for operating IC1.

5) IC1 (Main Processor)
This is a one-chip microcomputer, responsible for controlling the entire control unit.

6) IC2 (Memory Processor)
This is a memory IC, responsible for memory function.

7) IC3
This is a IC for driving light emitting diode.

8) Display Circuit
This is a circuit for driving light emitting diode by IC1 output.

9) Key Input Circuit
This is a circuit for transmitting key input information to IC1.

10) Sound-body Driving Circuit
This is a circuit for driving sound body by IC1 output.

11) Relay Driving Circuit
This is a circuit for driving output relay by IC1 output.

12) Door Sensing Switch Circuit
This is a circuit for driving IC1 to detect door opening/closing.

13) Exhaust Air Temperature Detecting Circuit
This is a circuit for transmitting output change of thermistor (Oven thermistor (1)) to IC1.

14) Magnetron Temperature Circuit (Detect no load or fan lock)
This is a circuit for transmitting output change of thermistor (Magnetron thermistor) to IC1.

15) Oven Cavity Temperature Detecting Circuit
This is a circuit for transmitting output change of thermistor (Oven thermistor (2)) to IC1.

16) High Voltage Monitoring Circuit.
This circuit detects problems in the magnetron / high voltage circuit by sensing a variation in the current flowing through the primary winding of the high voltage transformer.
During heating, the primary current of the high voltage transformers also flows through the primary winding of the current transformer CT1. This causes a current to be induced in the secondary winding of CT1 and results in an AC voltage which is determined by R100.
This AC voltage is then half wave rectified by D100 and smoothed (filtered) by C100.
This AC voltage is the input to the AN3 port of IC1, which determines if there is a magnetron / high voltage problem.

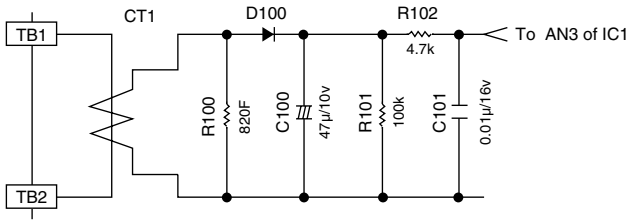

Figure T-1. High Voltage Monitoring Circuit

17) Supply Voltage Detecting Circuit
This is a circuit for detecting troubles of input voltage at microwave oven. The function of this circuit is to divide the variation of voltage across C1 to supply voltage variation by ZD1, R1 and R2 and to put the result to AN6 port of IC1 for detection.

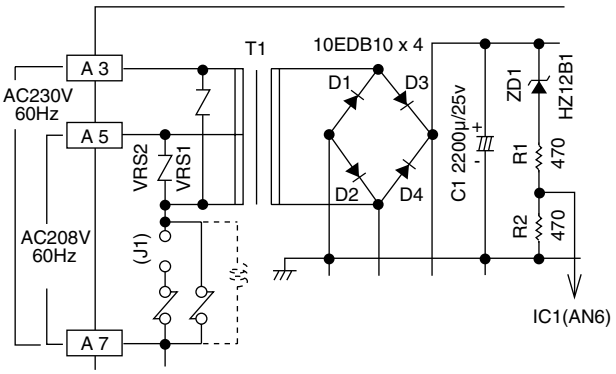

FIgure T-2. Supply Voltage Detecting Circuit

VOLTAGE REGULATION FOR "ERROR" INDICATION

	Voltage regulation	Input to 208V	Input to 230V
*Normal	+6% excel.	208.0--220.48	230.0--243.8
*Normal	-9% excel.	189.28--208.0	209.3--230.0
*Error.or indication range	+6% to +13% excel.	220.48 235.04	243.8 259.9
	-9% to -13% excel.	189.28 180.96	209.3 200.1
Not cookable	over +13% under -13%	over 235.04 under 180.96	over 259.9 under 200.1

* Cookable Range

2. Key Unit

The key unit is composed of a matrix circuit in which when a key it touched, one of signals P30--P34 generated by the LSI, is passed through the key and returned to the LSI as one of signals P24--P27.
This model has 20 Memory pads.
When the oven is shipped, Memory pad 1 to 10 are set as follows: fig.1.

Memory No.	Cook Time	Output Power
1	10 sec.	100%
2	20 sec.	100%
3	30 sec.	100%
4	45 sec.	100%
5	1 min.	100%
6	1 min. 15 sec.	100%
7	1 min. 30 sec.	100%
8	2 min.	100%
9	2 min. 30 sec.	100%
0	3 min.	100%

(fig. 1)

This model has a double quantity pad. When the oven is shipped, Magnification "1.8" is preset in the double quantity pad.
This model has an express defrost pad. When the oven is shipped, express defrost is set as follows: fig.2.

	1 STAGE	2 STAGE	3 STAGE
FORMULA	P = 0.2T + 20	P = 0.13T + 30	P = 0.67T - 50
POWER	40 %	30 %	20 %

T : Total cooling time

(fig. 2)

● When 1/2 total cooking time is passed, the signal will sound and "CHECK" indicator will flash.

DESCRIPTION OF LSI

LSI(IZA633DR)

The I/O signal of the LSI(IZA633DR) is detailed in the following table.

Pin No.	Signal	I/O	Description
1	VCC	IN	**Power source voltage: +5V.** VC voltage of power source circuit input.
2/3	VEE/AVSS	IN	Connected to GND
4	VREF	IN	Connected to VC. (+5V)
5	AN7	IN	**Temperature measurement input: INTAKE THERMISTOR.** By inputting DC voltage corresponding to the temperature detected by the thermistor, this input is converted into temperature by the A/D converter built into the LSI.
6	AN6	IN	Used (judge for input voltage).
7-8	AN5-AN4	IN	**Terminal to change functions according to the model.** Signal in accordance with the model in operation is applied to set up its function.
9	AN3	IN	A/D input for troubleshooting Magnetron 1. and/or Magnetron 2.
10	AN2	IN	**Temperature measurement input: OVEN THERMISTOR.** By inputting DC voltage corresponding to the temperature detected by the thermistor, this input is converted into temperature by the A/D converter built into the LSI.
11	AN1	IN	**Input signal which communicates the door open/close information to LSI.** Door closed; "L" level signal (0V). Door opened; "H" level signal (+5V).
12	AN0	IN	**Temperature measurement input: FAN LOCK THERMISTOR.** By inputting DC voltage corresponding to the temperature detected by the thermistor, this input is converted into temperature by the A/D converter built into the LSI.
13-14	P55-P54	OUT	**Magnetron high-voltage circuit driving signal.** To turn on and off the cook relay. In 100% power level operation, "H" level during cooking; "L" level otherwise. In other power level operation (90,80,70,60,50,40,30,20,10 or 0%), "H" and "L" level is repeated according to power level.
15	P53	OUT	**Oven thermistor circuit power supply control signal.** Output the "H" signal to supply power to oven thermistor circuit about 1.7msec. after plugging in.
16-18	P52-P50	IN	Terminal not used.
19	P47	OUT	**Signal to sound buzzer.** This signal is to control the 2.5kHz continuous signal through IC3. A: key touch sound. B: Guydance sound. C: Completion sound.
20	P46	OUT	**Oven lamp, Blower motor and Stirrer motor driving signal. (Square Waveform : 60Hz)** To turn on and off the shut-off relay (RY1). The Square waveform voltage is delivered to the RY1 driving circuit and relays(RY2,RY3,COOK RELAY) control circuit.

Power level	ON	OFF	Power level	ON	OFF
100%	32sec.	0sec.	40%	16sec.	16sec.
90%	30sec.	2sec.	30%	12sec.	20sec.
80%	26sec.	6sec.	20%	8sec.	24sec.
70%	24sec.	8sec.	10%	6sec.	26sec.
60%	22sec.	10sec.	0%	0sec.	32sec.
50%	18sec.	14sec.			

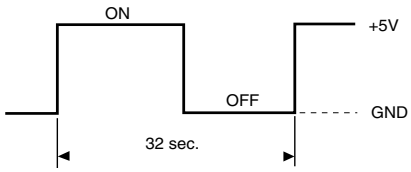

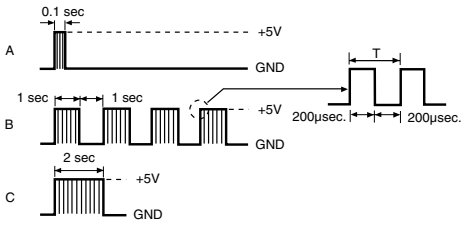

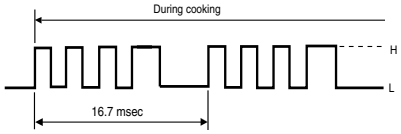

Pin No.	Signal	I/O	Description
21	P45	OUT	**Digit selection signal.** The relation between digit signal and digit are as follows: Digit signal Digit P42 ..... 1st. P43 ..... 2nd. P44 ..... 3rd. P45 ..... 4th. Normally, one pulse is output in every ß period, and input to the grid of the light-emitting diode. 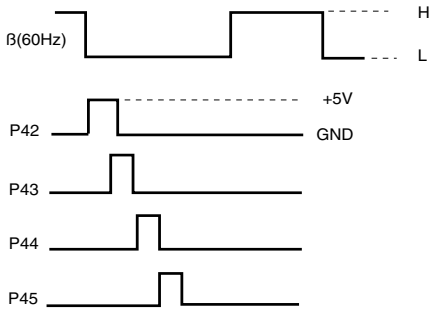
22-24	P44-P42	OUT	**Digit selection signal.** Signal similar to P45.
25	INT1	IN	**Signal synchronized with commercial power source frequency.** This is basic timing for all time processing of LSI. 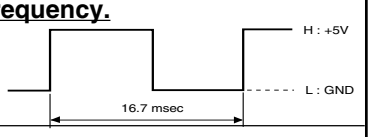
26	INT0	IN	Connected to GND through resistor.
27	RESET	IN	**Auto clear terminal.** Signal is input to reset the LSI to the initial state when power is supplied. Temporarily set to "L" level the moment power is supplied, at this time the LSI is reset. Thereafter set at "H" level.
28	P71	OUT	Memory (EEPROM) clock output.
29	P70	IN/OUT	Memory (EEPROM) data input/output.
30	XIN	IN	**Internal clock oscillation frequency setting input.** The internal clock frequency is set by inserting the ceramic filter oscillation circuit with respect to XOUT terminal.
31	XOUT	OUT	**Internal clock oscillation frequency control output.** Output to control oscillation input of XIN.
32	VSS	IN	Connected to GND.
33	P27	IN	**Signal coming from touch key.** When either one of G-12 line keys on key matrix is touched, a corresponding signal out of P30, P31, P32, P33, P34 will be input into P27. When no key is touched, the signal is held at "L" level.
34	P26	IN	**Signal similar to P27.** When either one of G-11 line keys on key matrix is touched, a corresponding signal will be input into P26.
35	P25	IN	**Signal similar to P27.** When either one of G-10 line keys on key matrix is touched, a corresponding signal will be input into P25.
36	P24	IN	**Signal similar to P27.** When either one of G-9 line keys on key matrix is touched, a corresponding signal will be input into P24.
37-38	P23-P22	OUT	Terminal not used.
39-40	P21-P20	OUT	**Segment data signals.** The relation between signals and indicators are as follows: Signal Segment Signal Segment P21,P20 ..... 1 P05,P04 ..... 7 P17.P16 ..... 2 P03,P02 ..... 8 P15,P14 ..... 3 P01,P00 ..... 9 P13,P12 ..... 4 P11,P10 ..... 5 P07,P06 ..... 6 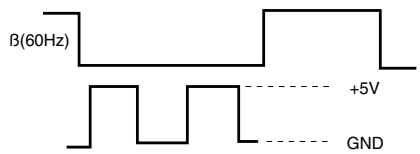

Pin No.	Signal	I/O	Description
41-48	P17-P10	OUT	**Segment data signal.** Signal similar to P21.
49-56	P07-P00	OUT	**Segment data signal.** Signal similar to P21.
57-59	P37-P35	OUT	Terminal not used.
60	P34	OUT	**Key strobe signal.** Signal applied to touch-key section. A pulse signal is input to P27, P26, P25 and P24 terminals while one of G4 line keys on key matrix is touched.
61	P33	OUT	**Key strobe signal.** Signal applied to touch-key section. A pulse signal is input to P27, P26, P25 and P24 terminals while one of G5 line keys on key matrix is touched.
62	P32	OUT	**Key strobe signal.** Signal applied to touch-key section. A pulse signal is input to P27, P26, P25 and P24 terminals while one of G6 line keys on key matrix is touched.
63	P31	OUT	**Key strobe signal.** Signal applied to touch-key section. A pulse signal is input to P27, P26, P25 and P24 terminals while one of G7 line keys on key matrix is touched.
64	P30	OUT	**Key strobe signal.** Signal applied to touch-key section. A pulse signal is input to P27, P26, P25 and P24 terminals while one of G8 line keys on key matrix is touched.

2-2 Memory IC (IC2)

X24C02P is a 2K-bit, serial memory, enabling CMOS to be erased/written electrically. This memory is constructed with 256 registers x 8bits, enabling individual access, read and write operations to be performed. Details of input/output signal for IC2 are as shown in the following diagram.

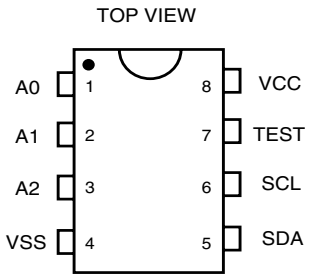

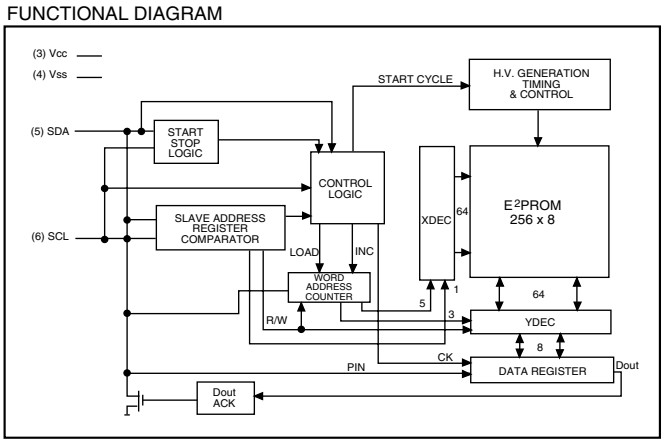

Figure T-3 Relation between Pin Nos, and Signals

Pin No.	Signal	I/O	Description
1-3	A0-A2	IN	Connected to +5V.
4	VSS	IN	Connected to GND.
5	SDA	IN/OUT	Serial data input/output : input/outputs data to IC1.
6	SCL	IN	Clock signal input : input/outputs sireal data at every one pulse.
7	TEST	IN	Connected to GND.
8	VCC	IN	Connected to +5V.

SERVICING

1. Precautions for Handling Electronic Components

This unit uses CMOS LSI in the integral part of the circuits. When handling these parts, the following precautions should be strictly followed. CMOS LSI have extremely high impedance at its input and output terminals. For this reason, it is easily influenced by the surrounding high voltage power source, static electricity charge in clothes, etc. and sometimes it is not fully protected by the built-in protection circuit.

In order to protect CMOS LSI.

1) When storing and transporting, thoroughly wrap them in aluminium foil. Also wrap all PW boards containing them in aluminium foil.
2) When soldering, ground the technician as shown in the figure and use grounded soldering iron and work table.

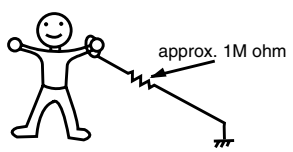

2. Shapes of Electronic Components

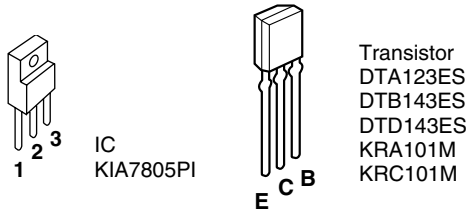

3. Servicing of Touch Control Panel

We describe the procedures to permit servicing of the touch control panel of the microwave oven and the precautions you must take when doing so. To perform the servicing, power to the touch control panel is available either from the power line of the oven itself or from an external power source.

(1) Servicing the touch control panel with power supply of the oven:

CAUTION:

THE HIGH VOLTAGE TRANSFORMER OF THE MICROWAVE OVEN IS STILL LIVE DURING SERVICING AND PRESENTS A HAZARD.

Therefore, before checking the performance of the touch control panel,

1) Disconnect the power supply cord, and then remove outer case.
2) Open the door and block it open.
3) Discharge high voltage capacitor.
4) Disconnect the leads to the primary of the power transformer.
5) Ensure that these leads remain isolated from other components and oven chassis by using insulation tape.
6) After that procedure, re-connect the power supply cord.

After checking the performance of the touch control panel,

1) Disconnect the power supply cord.
2) Open the door and block it open.
3) Re-connect the leads to the primary of the power transformer.
4) Re-install the outer case (cabinet).
5) Re-connect the power supply cord after the outer case is installed.
6) Run the oven and check all functions.

A. On some models, the power supply cord between the touch control panel and the oven itself is so short that the two can't be separated. For those models, check and repair all the controls (sensor-related ones included) of the touch control panel while keeping it connected to the oven.

B. On some models, the power supply cord between the touch control panel and the oven proper is long enough that they may be separated from each other. For those models, it is possible to check and repair the controls of the touch control panel while keeping it apart from the oven proper; in this case you must short both ends of the door sensing switch (on PWB) of the touch control panel with a jumper, which activates an operational state that is equivalent to the oven door being closed. As for the sensor-related controls of the touch control panel, checking them is possible if dummy resistor(s) with resistance equal to that of the controls are used.

(2) Servicing the touch control panel with power supply from an external power source:

Disconnect the touch control panel completely from the oven proper, and short both ends of the door sensing switch (on PWB) of the touch control panel, which activates an operational state that is equivalent to the oven door being closed. Connect an external power source to the power input terminal of the touch control panel, then it is possible to check and repair the controls of the touch control panel it is also possible to check the sensor-related controls of the touch control panel by using the dummy resistor(s).

4. Servicing Tools

Tools required to service the touch control panel assembly.

1) Soldering iron: 30W
   (It is recommended to use a soldering iron with a grounding terminal.)
2) Oscilloscope: Single beam, frequency range: DC-10MHz type or more advanced model.
3) Others: Hand tools

5. Other Precautions

1) Before turning on the power source of the control unit, remove the aluminium foil applied for preventing static electricity.
2) Connect the connectors of the key unit to the control unit being sure that the lead wires are not twisted.
3) After aluminium foil is removed, be careful that abnormal voltage due to static electricity etc. is not applied to the input or output terminals.
4) Attach connectors, electrolytic capacitors, etc. to PWB, making sure that all connections are tight.
5) Be sure to use specified components where high precision is required.

PROCEDURE FOR CHECKING/CLEARING SERVICE COUNTS OF MICROWAVE OVEN

The following procedure enables the servicer to obtain the total using times (cook cycles) since the microwave oven is purchased and the total operation time (hours) since the microwave oven is purchased. The maximum capacity of the total using is 999,999 times, and the maximum capacity of total operation time is 999,999 hours.

1) Practice for checking total using times (Ex. 345678 times).
... Flashing / ○... 0.1sec BUZZER

PAD	DISPLAY	INDICATOR	TONE
(Door close)	.		
CHECK	. .	CHECK No.	○
CHECK	82 68 (user total count)	CHECK	○
SIGNAL SIGNAL DOUBLE QUANTITY	34 56 (service total count upper figure) 3456XX		○
1 (No 1) (after 1 sec.)	1 34 56 (service total count upper figure)	No.	○
2 (No 2) (after 1 sec.)	2 78 (service total count lower figure)	No.	○
CHECK	.		○

2) Practice for checking total operation time (Ex. 4567 hours).
... Flashing / ○... 0.1sec BUZZER

PAD	DISPLAY	INDICATOR	TONE
(Door close)	.		
CHECK	. .	CHECK No.	○
CHECK	82 68 (user total count)	CHECK	○
SIGNAL SIGNAL DOUBLE QUANTITY	34 56 (service total count upper figure) 3456XX		○
9 (No 9) (after 1 sec.)	9 45 (Total operation time upper figure)	No.	○
0 (No 0) (after 1 sec.)	0 67 (Total operation time lower figure)	No.	○
CHECK	.		○

3) Practice for inputting total using times (Ex. 310000 times).
... Flashing / ○... 0.1sec BUZZER

PAD	DISPLAY	INDICATOR	TONE
(Door close)	.		
	.		
CHECK	.	CHECK No.	○
CHECK	82 68 (user total count)	CHECK	○
SIGNAL SIGNAL DOUBLE QUANTITY	34 56 (service total count upper figure) 3456XX		○
2 (after 1 sec.)	2 78 (service total count lower figure) XXXX78	No.	○
1 (after 1 sec.)	1 34 56	No.	○
SET	0		○
3,1,0,0	31 00		○ x 4
SET	31 00		○
2 (after 1 sec.)	2 78	No.	○
SET 0 SET	0 0 0 (service total count 310000 set)		○ ○ ○
CHECK	.		○

4) Practice for inputting total operation time (Ex. 1234 hours).
... Flashing / ○... 0.1sec BUZZER

PAD	DISPLAY	INDICATOR	TONE
(Door close)	.		
	.		
CHECK	.	CHECK No.	○
CHECK	82 68 (user total count)	CHECK	○
SIGNAL SIGNAL DOUBLE QUANTITY	34 56 (service total count upper figure) 3456XX		○
9 (after 1 sec.)	9 45	No.	○
SET	0		○
1,2	12		○ x 2
SET	12		○
0 (after 1 sec.)	10 67	No.	○
SET	0		○
3,4	34		○ x 2
SET	34 (Total operation time 1234 hours set)		○
CHECK	.		○

5) Practice for cancelling total using times and total operation time (user and service) and all other counter.

... Flashing / ○... 0.1sec BUZZER

PAD	DISPLAY	INDICATOR	TONE
(Door close)	.		
SET	.		
SET	.	No.	○
(within 2.0sec.)	.		
	.		
DOUBLE QUANTITY	.	DOUBLE	○
CHECK	.	↓	
SINGLE	.		
SET	.		○

OTHER SETTING AND CHECKING PROCEDURE

1. EXPRESS DEFROST

T = STG1 + STG 2 + STG3

STG = A x T + B

1) To set the constants of Express defrost.

(Ex. 0.20T + 20, 40% at 1st stage
0.13T + 30, 30% at 2nd stage
0.67T - 50, 20% at 3rd stage)

" ": Flicker / ○ 0.1 sec BUZZER

PAD ORDER	DISPLAY	TONE
(Door close)	.	
SET	.	
SET (within 2 sec.)	"NO" .	○
#1 START	.	
EXPRESS DEF	0.00 DEF.	○
2,0	0.20 DEF (A)	○ x 2
#2 SELECTATIME	0 DEF	○
2	20 DEF (+ - B)	○
#4 SELECTAPOWER	DEF P -	○
4	DEF P - 40	○
SELECTATIME	0.00 DEF	○
1,3	0.13 DEF (A)	○ x 2
SELECTATIME	0 DEF	○
3	30 DEF (+ - B)	○
#4 SELECTAPOWER	DEF P -	○
3	DEF P - 30	○
SELECTATIME	0 DEF	○
#3 5	5 DEF	○
SELECTAPOWER	DEF P -	○
2	DEF P - 20	○
SET	. DEF	○
SET	.	○

#1 : No key entry signal.
#2 : To set -B, touch the selectapower key twice.
#3 : Ex. defrost is paused after 50% of cooking time has lapsed when 5 key is entered, otherwise it is paused at the end of each stage.

KEY	DISPLAY	PAUSE
0	0	End of each stage
1	1	After 10% of total cooking time is passed
:	:	:
9	9	After 90% of total cooking time is passed
START	A	There is no pause

2) To check the constants of Express defrost.

" ": Flicker / ○: 0.1 sec BUZZER

PAD	DISPLAY	INDICATOR	TONE
	.		
CHECK	.	"No." CHECK	○
EXPRESS DEFROST	0.20 (A) 20 (+-B) ↓ P - 40 (PL) ↓ 0.13 (A) 30 (+-B) ↓ P - 30 (PL) ↓ 5 (pause time) ↓ P - 20 (PL) ↓ (repeat)	DEF ↓ ↓	○
CHECK	.		○

3) To set user counts

Practice for inputting total number of using times (Ex. 3100 times), and using times of Memory 1 (Ex. 100 times).

" ": Flicker / ○ : 0.1 sec BUZZER

PAD	DISPLAY	INDICATOR	TONE
(Door close)	.		
	.		
CHECK	.	CHECK No.	○
CHECK	82 68 (user total count)	CHECK	○
DOUBLE QUANTITY	↓	↓	
SIGNAL	↓	↓	○
SET	0	↓	○
3,1,0,0	31 00	↓	○ x 4
SET	31 00 (user total count 3100 set)	↓	○
#A 1	1 ↓	↓ No.	○
(after 1 sec.)	1 32 (memory 1 count)	↓	
SET	0	↓	○
1,0,0	1 00	↓	○ x 3
SET	1 00 (memory 1 count 100 set) ↓	↓	○
CHECK	.		○

NOTE:
1 : To input using times of other memory, touch necessary Memory key at above step #A.
2 : To input using times of manual cooking, touch SELECTATIME key at above step #A.
3 : To input using times of Express Defrost, touch EXPRESS DEFROST key at above step #A.

MEMORY READJUSTMENT PROCEDURE

1. To set the standard voltage

When the IC2 is changed in the control unit, the standard voltage must be set again for power supply check.
The power supply must be set 230V within ± 1V, and 230V connector in control unit installed.

PAD ORDER	DISPLAY		TONE
(230V power) (Door close) (Plug in)	(BLANK) .		
SIGNAL	.		
DOUBLE	.		
SET	.		
CHECK	0633	All indicators ON	○
(plug off)	(BLANK)		

NOTE :
1. This procedure must be performed within 1 minute.
2. When IC2 malfunctions the unit does not function normally (correct cooking data is not output, data is not stored correctly in memory, etc.).
3. Initialization of memory after repairing the touch control panel.

After repairing the touch control panel, reset all counters to 0 (including service counter). Make sure that the constant which is stated on page 22 (fig.2) has been memorized. If it mismatches, input the constant according to "EXPRESS DEFROST" on page 28.

A CHECK PROCEDURE FOR ERROR CODE INDICATION EE1, EE2

When the error code EE1 or EE2 is displayed, carry out following procedures and find out the defective parts. When oscillation is unstable due to defect of upper and/or lower magnetron or defective driving circuits, error code indications EE1 or EE2 do not function properly.

[CHECK METHOD FOR ERROR CODE INDICATION]

Put water in a cup and place inside the oven inside, and operate each circuit separately.
And check working of each circuit by temperature rise of the water and judge which magnetron circuit is defect.
After judging, please replace or repair applicable part according to the troubleshooting guide in the service manual.

[CAUTION ABOUT HIGH VOLTAGE]

There is high voltage present inside, disconnect the power supply cord from the outlet before removing the outer case.
Reinstall the outer case when operate the unit.

[JUDGMENT PROCEDURE]

1]. PREPARATION FOR JUDGMENT

1. Disconnect the plug from the outlet.
2. Remove the air filter and unscrew two screws at the control panel lower holding the control panel.
3. Push up the control panel and pull it toward.

2]. [JUDGMENT PROCEDURE FOR UPPER MAGNETRON AND ITS CIRCUIT]

Disconnect the power supply cord.

↓

Disconnect lead wires to the interlock relay RY3 to avoid operation of lower magnetron circuit.

↓

Reconnect power supply

↓

Heating for one minute.

↓

Temperature of the water increased? *1

No → If **EE1** is indicated, carry out Test procedures A-J and find out the defective part. **Upper magnetron**, its driving circuit or any parts on its circuit may be **defective**.

Yes ↓

EE2 should be indicated.
Upper magnetron, its driving circuit and parts on the circuit are **normal**.

*1**: CHECK OF TEMPERATURE RISE**
Fill approx. 453 CC of water in a measuring cup and place it in the oven.
Operate the oven for one minute.
Substract cold water temperature from hot water temperature.
The result should be approx. 18 - 36F (10 - 20 deg. C).

3]. [JUDGMENT PROCEDURE FOR LOWER MAGNETRON AND ITS CIRCUIT]

Disconnect the power supply cord.

↓

Disconnect lead wires to the interlock relay RY2 to avoid operation of lower magnetron circuit. Lead wires to the interlock relay RY3 should be connected.

↓

Reconnect power supply

↓

Heating for one minute.

↓

Temperature of the water increased? *1

No → If **EE2** is indicated, carry out Test procedures A-J and find out the defective part. **Lower magnetron**, its driving circuit or any parts on its circuit may be **defective**.

Yes ↓

EE1 should be indicated.
Lower magnetron, its driving circuit and parts on the circuit are **normal**.

*1**: CHECK OF TEMPERATURE RISE**
Fill approx. 453 CC of water in a measuring cup and place it in the oven.
Operate the oven for one minute.
Substract cold water temperature from hot water temperature.
The result should be approx. 18 - 36F (10 - 20 deg.C).

COMPONENT REPLACEMENT AND ADJUSTMENT PROCEDURE

WARNING AGAINST HIGH VOLTAGE:

Microwave ovens contain circuitry capable of producing very high voltage and current, contact with following parts may result in severe, possibly fatal, electric shock.
(Example)
High Voltage Capacitor, Power Transformer, Magnetron, High Voltage Rectifier Assembly, High Voltage Harness etc..

WARNING: Avoid possible exposure to microwave energy. Please follow the instructions below before operating the oven.

1. Disconnect the power supply cord.
2. Make sure that a definite “click” can be heard when the microwave oven door is unlatched. (Hold the door in a closed position with one hand, then pull the door release lever with the other, this causes the latch leads to rise, it is then possible to hear a “click” as the door switches operate.)
3. Visually check the door and cavity face plate for damage (dents, cracks, signs of arcing etc.).

Carry out any remedial work that is necessary before operating the oven.
Do not operate the oven if any of the following conditions exist;
1. Door does not close firmly.
2. Door hinge, support or latch hook is damaged.
3. The door gasket or seal is damaged.
4. The door is bent or warped.
5. There are defective parts in the door interlock system.
6. There are defective parts in the microwave generating and transmission assembly.
7. There is visible damage to the oven.

Do not operate the oven:
1. Without the RF gasket (Magnetron).
2. If the wave guide or oven cavity are not intact.
3. If the door is not closed.
4. If the outer case (cabinet) is not fitted.

WARNING FOR WIRING

To prevent an electric shock, take the following precautions.
1. Before wiring,
   1) Disconnect the power supply cord.
   2) Open the door and block it open.
   3) Discharge the two high voltage capacitors and wait for 60 seconds.
2. Don’t let the wire leads touch to the followiong parts;
   1) High voltage parts:
      Magnetron, High voltage transformer, High voltage capacitor, High voltage rectifier assembly and High voltage wire.
   2) Hot parts:
      Oven lamp, Magnetron, High voltage transformer, and Oven cavity.
   3) Sharp edge:
      Bottom plate, Oven cavity, Waveguide flange, Chassis support and other metallic plate.
   4) Movable parts (to prevent a fault)
      Blower fan blade, Blower fan motor, Switches, Switch levers, Antenna motor and Sirrer antennas.
3. Do not catch the wire leads in the outer case cabinet.
4. Insert the positive lock connector until its pin is locked and make sure that the wire leads do not come off even if the wire leads are pulled.
5. To prevent an error function, connect the wire leads correctly, referring to the Pictorial Diagram.

Please refer to ‘OVEN PARTS, CABINET PARTS, CONTROL PANEL PARTS, DOOR PARTS’, when carrying out any of the following removal procedures:

OUTER CASE, REAR CABINET AND POWER SUPPLY CORD REMOVAL

To remove the components, procedure as follows.
1. Disconnect the power supply cord.
2. Remove the screws from the rear and along side the edge of the outer case.
3. Slide the case back about 1 inch (3 cm) to free it from the oven cavity.
4. Lift entire case from the unit.
5. **DISCHARGE TWO HIGH VOLTAGE CAPACITORS BEFORE TOUCHING ANY OVEN COMPONENTS OR WIRING.**
6. Now, outer case is free.

To remove rear cabinet and power supply cord:
7. Remove the screws holding the rear cabinet to the oven cavity and blower motor.
8. Remove the one (1) screws holding the switch mounting angle to the rear cabinet and release the switch mounting angle from the rear cabinet.
9. Disconnect the power supply cord from the supply harness.
10. Remove the one (1) screws holding the grounding wire of power supply cord to the oven cavity.
11. Remove the rear cabinet with the power supply cord from the oven cavity.
12. Loosen the tab of the cord bushing, and remove the power supply cord with the cord bushing from the rear cabinet.
13. Remove the cord bushing from the power supply cord,
14. Now, the power supply cord and rear cabinet are free.

POWER TRANSFORMERS (1) AND/OR (2) REMOVAL

1. Disconnect the power supply cord and then remove outer case and rear cabinet, referring to "OUTER CASE, REAR CABINET AND POWER SUPPLY CORD REMOVAL".
2. Open the oven door and block it open.
3. Discharge two high voltage capacitors.
4. Disconnect wire leads of power transformers (1) and/or (2) from magnetrons (1) and/or (2).
5. Remove the wire leads of power transformers from the wire holder.
6. Pull out the wire leads of power transformers from the tube.
7. Disconnect wire leads of power transformers (1) and/or (2) from high voltage capacitors (1) and/or (2).
8. Disconnect the high voltage wire lead(s) from power transformers (1) and/or (2).
9. Disconnect the main wire harness from power transformers (1) and/or (2).
10. Remove two (2) screws holding each power transformer (1) and/or (2) to base plate.
11. Remove the power transformers (1) and/or (2) from base plate.
12. Now, power transformers (1) and/or (2) are free.

MAGNETRONS (1) AND/OR (2) REMOVAL

Removal

1. Disconnect the power supply cord and then remove outer case and rear cabinet, referring to "OUTER CASE, REAR CABINET AND POWER SUPPLY CORD REMOVAL".
2. Open the oven door and block it open.
3. Discharge two high voltage capacitors.
4. Remove the two (2) screws holding magnetron exhaust duct to upper and lower waveguide.
5. Remove the magnetron exhaust duct from oven cavity.
6. Disconnect wire leads from magnetrons (1) and/or (2).
7. Disconnect magnetron thermistor from the connector of the stop switch harness.
8. Remove the one (1) screw holding the thermistor angle to the upper magnetron.
9. Remove the four (4) screws holding each magnetron (1) and/or (2) to upper and/or lower waveguide. When removing the screws, hold the magnetron to prevent it from falling.
10. Remove the magnetrons (1) and/or (2) from upper and/or lower waveguide with care so magnetron antenna is not hit by any metal object around antenna.
11. Pull out the thermistor angle from the upper magnetron (1).
12. Remove the thermo-contactor from the upper magnetron (1).
13. Now, the magnetrons (1) and/or (2) are free.

CAUTION: WHEN REPLACING MAGNETRON, BE SURE THE R.F. GASKET IS IN PLACE AND MOUNTING SCREWS ARE TIGHTENED SECURELY.

MAGNETRON THERMISTOR REPLACEMENT

Removal

1. Disconnect the power supply cord and then remove outer case and rear cabinet, referring to "OUTER CASE, REAR CABINET AND POWER SUPPLY CORD REMOVAL".
2. Open the oven door and block it open.
3. Discharge two high voltage capacitors.
4. Remove the upper magnetron from the upper waveguide flange, referring to "MAGNETRON (1) AND /OR (2) REMOVAL".
5. Now, the upper magnetron with the magnetron thermistor should be free.
6. Remove the thermistor angle from the upper magnetron by pulling out.
7. Straighten the tab of the magnetron thermistor angle holding the magnetron thermistor.
8. Remove the magnetron thermistor from the thermistor angle.
9. Now, the magnetron thermistor is free.

Re-install

1. Apply the silicone grease (Shinetsu silicone grease G746 of Shinetsu Chemical Co. Ltd.) to the thermo-contactor and the magnetron thermistor.
2. Insert the thermo-contactor between the 1st. fin and the 2nd. fin.
3. Install the magnetron thermistor to the thermistor angle as shown in Figure C-1.
4. Hold the magnetron thermistor to the thermistor angle by bending the tab of the thermistor angle.
5. Insert the thermistor angle between the 2nd. fin and 3rd. fin from the upper fin of the upper magnetron and push it until the thermistor angle stops.

NOTE: The magnetron thermistor should be between the upper fin and the 2nd. fin.

6. Re-install the upper magnetron to the upper waveguide flange with four (4) screws.
7. Re-install the thermistor angle to the upper waveguide flange with one (1) screw.
8. Re-install the magnetron exhaust duct to the upper and lower waveguide flanges with two (2) screws.
9. Route the thermistor harness under the magnetron temperature fuse.
10. Connect the thermistor harness to the stop switch harness.
11. Connect the wire leads to the upper magnetron, referring to the pictorial diagram.
12. Re-install the power supply cord, rear cabinet and outer case cabinet to the oven by reversing the procedures of "OUTER CASE, REAR CABINET AND POWER SUPPLY CORD REMOVAL".

CAUTION: WHEN REPLACING MAGNETRON, BE SURE THE R.F. GASKET IS IN PLACE AND MOUNTING SCREWS ARE TIGHTENED SECURELY.

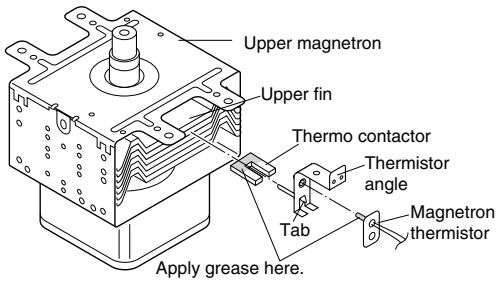

Figure C-1. Magnetron thermistor installation

HIGH VOLTAGE CAPACITOR AND HIGH VOLTAGE RECTIFIER ASSEMBLY REMOVAL

1. Disconnect the power supply cord and then remove outer case and rear cabinet , referring to "OUTER CASE, REAR CABINET AND POWER SUPPLY CORD REMOVAL".
2. Open the oven door and block it open.
3. Discharge two high voltage capacitors.
4. Remove two (2) screws holding ground side terminals of high voltage rectifier assembly to the capacitor holder and oven cavity.
5. Disconnect all wire leads from the high voltage capacitor.
6. Disconnect wire leads of high voltage rectifier assembly from the power transformers (1) and/or (2).
   Now, high voltage assembly is free.
7. Remove the three (3) screws holding the blower motor to the top of oven cavity, the chassis support and air duct.
8. Remove two (2) screws holding the capacitor holder to oven cavity.
   Now, the capacitors (1), (2) and the high voltage rectifier assembly are free.

CAUTION:
1. DISCHARGE THE TWO HIGH VOLTAGE CAPACITOR BEFORE TOUCHING ANY OVEN COMPONENTS OR WIRING.
2. DO NOT REPLACE ONLY THE HIGH VOLTAGE RECTIFIER. IF IT IS DEFECTIVE, REPLACE THE HIGH VOLTAGE RECTIFIER ASSEMBLY.
3. WHEN REPLACING THE HIGH VOLTAGE RECTIFIER ASSEMBLY AND THE HIGH VOLTAGE CAPACITOR, THE GROUND SIDE TERMINAL OF THE HIGH VOLTAGE RECTIFIER MUST BE SECURED FIRMLY WITH A GROUNDING SCREW.

HOW TO RELEASE THE POSITIVE LOCK® CONNECTOR.

Procedure
1. Disconnect the power supply cord and then remove outer case and rear cabinet, referring to "OUTER CASE, REAR CABINET AND POWER SUPPLY CORD REMOVAL".
2. Open the oven door and block it open.
3. Discharge two high voltage capacitors.
4. Pushing the lever of positive lock® connector, pull down the connector from the terminal.
5. Now, the connector is free.

Note: If the positive lock® has a insulation sleeve, first remove it. If you do not, you can not push the lever of positive lock®.

CAUTION: THE POSITIVE LOCK® TERMINAL CAN NOT BE REMOVED BYJUST PULLING ON IT. THE LOCK LEVER MUST BE RELEASED TO REMOVE THE CONNECTOR FROM THE TERMINAL.

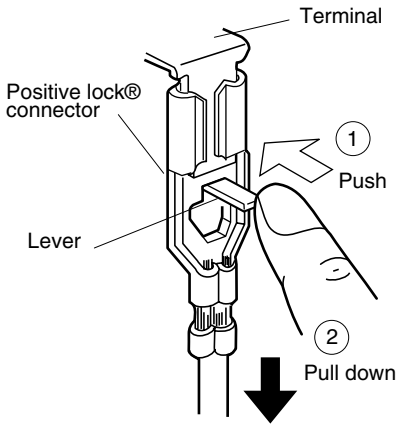

Figure C-2. How to release the positive lock connector.

BLOWER MOTOR REMOVAL

1. Disconnect the power supply cord and then remove outer case and rear cabinet, referring to "OUTER CASE, REAR CABINET AND POWER SUPPLY CORD REMOVAL".
2. Open the oven door and block it open.
3. Discharge two high voltage capacitors.
4. Disconnect the main wire harness from the blower motor and noise filter.
5. Remove the two (2) screws holding the blower motor angle to the oven cavity.
6. Remove the one (1) screw holding the blower motor angle to the chassis support.
7. Remove the blower motor from the oven cavity.
8. Remove the two (2) screws holding the noise filter angle to the blower motor.
9. Now, the blower motor is free.

STIRRER MOTORS (UPPER AND LOWER) REMOVAL

UPPER
1. Disconnect the power supply cord and then remove outer case, referring to "OUTER CASE, REAR CABINET AND POWER SUPPLY CORD REMOVAL".
2. Open the oven door and block it open.
3. Discharge two high voltage capacitors.
4. Disconnect the wire leads from the stirrer motor (upper).
5. Remove the one (1) screw holding the stirrer motor (upper) to the oven cavity.
6. Turn and lift up the stirrer motor (upper).
7. Now, the stirrer motor (upper) is free.

LOWER
1. Disconnect the power supply coed.
2. Remove the stirrer motor cover by snipping off the material in four portions.
3. Where the portions have been snipped off bend the portions flat. No sharp edge must be evident after removal of the stirrer motor cover.
4. Disconnect the wire leads from the stirrer motor (lower).
5. Remove the one (1) screw holding the stirrer motor (Lower) to the oven cavity.
6. Now, the stirrer motor (lower) is free.
7. After replacement use one (1) screw to fit the stirrer motor cover. (This screw has been fitted to the base plate near the stirrer motor cover beforehand.)

CONTROL PANEL ASSEMBLY AND CONTROL UNIT REMOVAL

CONTROL PANEL ASSEMBLY REMOVAL

The complete control panel should be removed for replacement of components. To remove the control panel, proceed as follows:

1. Disconnect the power supply cord.
2. Remove the air intake filter assembly from the base plate.
3. Remove two (2) screws holding the control panel to the base plate.
4. Pull down the control panel and remove it forward.
5. Disconnect connectors (A), (B), (D), (H), wiring from tab terminal 1 and 2 and wiring from RY1 and RY2.
6. Now the control panel assembly is free.

CAUTION FOR TOUCH CONTROL PANEL REMOVAL

1) Hold the lower end (Position A, Fig. 1) of the touch control panel assembly firmly while sliding it down and toward you.

DO NOT FORCE THE CONTROL UNIT TO SLIDE DOWN DURING REMOVAL. THIS MAY CAUSE DAMAGE TO THE CONTROL UNIT BY HITTING THE TAB TERMINALS LOCATED AT THE FRONT OF THE OVEN CAVITY.

2) If the Touch Control Panel is hard to remove;
(1) Insert a flat head screw driver into space B . (Fig. 1)
(2) Rotate the screwdriver clockwise while holding position C of the Touch Control Panel. (Fig. 2)

TO AVOID DAMAGE TO TOUCH CONTROL PANEL, COVER THE TIP OF SCREWDRIVER WITH TAPE.

Replacement of individual component is as follows:

CONTROL UNIT AND CONTROL PANEL FRAME (WITH KEY)

7. Remove two (2) screws holding the control panel mounting angle to the panel frame.
8. Lift up the control panel mounting angle from the panel frame.
9. Disconnect connector (G) from the control unit by pushing the hooks of cable holder inwardly.
10. Remove five (5) screws holding the control unit to the panel frame assembly.
11. Push down the right side two (2) hooks fixing the control unit to the panel frame assembly, and lift up the control unit upward.
12. Now, the control unit and control panel frame (with key) are free.

CAUTION:
When installing the control unit into the control panel frame:

1. **Be careful not to damage any of the components on the control unit.**
2. **When inserting key units ribbon cable through the frame, ensure it is not pinched or bent. Ensure the control unit is pushed upward to lock into the control panel frame prior to screwing the control unit into the frame.**
3. **Ensure there are not any wires near the varistors, if the explode, they may damage the wires.**

NOTE: 1. Before attaching a new key unit, remove remaining adhesive on the control panel frame surfaces completely with a soft cloth soaked in alcohol.
2. When attaching the key unit to the control panel frame, adjust the upper edge and right edge of the key unit to the correct position of control panel frame.
3. Stick the key unit firmly to the control panel frame by rubbing with soft cloth to prevent scratching.

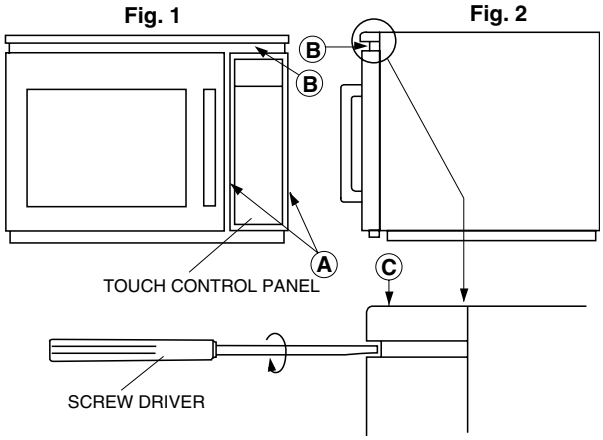

VOLTAGE SELECT SWITCH REMOVAL

1. Disconnect the power supply cord and then remove outer case and rear cabinet, referring to "OUTER CASE, REAR CABINET AND POWER SUPPLY CORD REMOVAL".
2. Now, the switch mounting angle should be removed from the rear cabinet.
3. Remove the two (2) screws and the two (2) nuts holding the voltage select switches and the switch spacer to the switch mounting angle.
4. Remove the voltage select switches and the switch spacer f rom the switch mounting angle.
5. Now, the voltage select switches are free.

DOOR SENSING SWITCH/SECONDARY INTERLOCK SWITCHES (1), (2) AND MONITOR SWITCHES (1), (2) REPLACEMENT

REMOVAL

1. Disconnect the power supply cord and then remove outer case, referring to "OUTER CASE, REAR CABINET AND POWER SUPPLY CORD REMOVAL".
2. Open the oven door and block it open.
3. Discharge two high voltage capacitors.
4. Remove outer control panel reffering to "CONTROL PANEL ASSEMBLY AND CONTROL UNIT REMOVAL".
5. Disconnect all wire leads from the all switches.
6. Remove two (2) screws holding latch hook to oven flange.
7. Remove latch hook assembly from oven flange.
8. Remove the switch(es) in accordance with following

procedure.

DOOR SENSING SWITCH

Push the two (2) tabs outward and pull switch forwards to release switch.

MONITOR SWITCHES OR SECONDARY INTERLOCK SWITCHES

Remove one (1) screw and nut holding two switches together to latch hook.

8. Now, switch(es) is now free.

RE-INSTALL

1. Re-install the switch(es) in accordance with following procedure.

DOOR SENSING SWITCH

Mount the door sensing switch in the lower position of latch hook.

MONITOR SWITCHES

1) Mount the two (2) switches side by side in the top position of the latch hook.
2) Fasten both switches together to latch hook with one (1) screw and nut.

SECONDARY INTERLOCK SWITCHES

1) Mount the two (2) switches side by side in the middle position of the latch hook.
2) Fasten both switches together to latch hook with one (1) screw and nut.

2. Re-install latch hook assembly and fasten it to oven flange with two (2) screws.
3. Re-connect all wire leads to all switches, referring to pictorial diagram. Be careful to ensure proper connection of the wire leads.
4. Make sure that the monitor switches (1), (2) and all other switches are operating properly. And check continuity of the monitor circuit. Refer to chapter "Test Procedure" and Adjustment procedure.

DOOR SENSING SWITCH/SECONDARY INTERLOCK SWITCHES (1), (2) AND MONITOR SWITCHES (1), (2) ADJUSTMENT

1. Disconnect the power supply cord and then remove outer case, referring to "OUTER CASE, REAR CABINET AND POWER SUPPLY CORD REMOVAL".
2. Open the oven door and block it open.
3. Discharge two high voltage capacitors.

If the door sensing switch, secondary interlock switches (1), (2) and monitor switches (1), (2) do not operate properly due to a misadjustment, the following adjustment should be made.

4. Loosen the two (2) screws holding latch hook to the oven cavity front flange.
5. With door closed, adjust latch hook by moving it back and forth, and up and down. In and out play of the door allowed by the upper and lower position of the latch hook should be less than 0.5mm. The vertical position of the latch hook should be adjusted so that the door sensing switch and secondary interlock switches (1), (2) are activated with the door closed. The horizontal position of the latch hook should be adjusted so that the monitor switches (1), (2) are activated with the door closed.
6. Secure the screws with washers firmly.
7. Check the operation of all switches. If all switches have not activated with the door closed, loosen two (2) screws and adjust the latch hook position.

After adjustment, check the following.

1. In and out play of door remains less than 0.5mm when in the latched position.
2. The door sensing switch and secondary interlock switches (1), (2) interrupt the circuit before the door can be opened.
3. Monitor switches (1), (2) contacts close when door is opened.
4. Re-install outer case and check for microwave leakage around door with an approved microwave survey meter. (Refer to Microwave Measurement Procedure.)

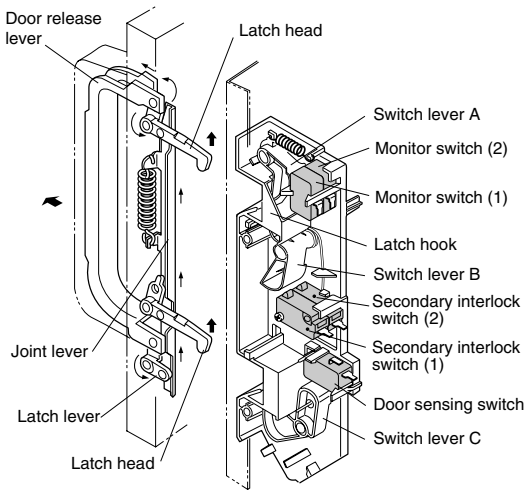

Figure C-3. Latch Switch Adjustments

DOOR REPLACEMENT

REMOVAL

1. Disconnect the power supply cord and then remove outer case, referring to "OUTER CASE, REAR CABINET AND POWER SUPPLY CORD REMOVAL".
2. Open the oven door and block it open.
3. Discharge two high voltage capacitors.
4. Remove the two (2) screws holding each of the upper and lower oven hinges to the oven cavity.
5. Remove door assembly with upper and lower oven hinges by pulling it forward.
6. Release upper and lower oven hinges from door assembly.
7. Now, door assembly is free.

NOTE: When individual parts are replaced, refer to "Door Disassembly".

RE-INSTALL

1. Insert the upper and lower oven hinges into door hinge pins.
2. Insert the upper and lower oven hinges with door assembly into rectangular holes of oven cavity front plate.
3. Make sure that the door is parallel with oven face lines (left and upper side line) and door latch heads pass through the latch holes correctly.
4. Fasten upper and lower oven hinges firmly to oven cavity with two (2) screws on each hinge.

Note: After any service to the door;

(A) Make sure that door sensing switch, secondary interlock switches (1), (2) and monitor switches (1), (2) are operating properly. (Refer to chapter "Test Procedures".).

(B) An approved microwave survey meter should be used to assure compliance with proper microwave radiation emission limitation standards.

DOOR ADJUSTMENT

Door adjustment is performed with the door properly installed and closed and while the oven hinges are loose.

1. Loosen upper and lower oven hinges with phillips head screw driver.
2. Adjust the door by moving it vertically so that the top right hand corner of the door is in line with the top of the control panel frame assembly.
3. Tighten the upper and lower oven hinge screws.

After adjustment, make sure of the following:

1. Door latch heads smoothly catch the latch hook through the latch holes, and the latch head goes through the center of the latch hole.
2. Deviation of the door alignment from horizontal line of cavity face plate is to be less than 1.0mm.
3. The door is positioned with its face depressed toward the cavity face plate.
4. Re-install outer case and check for microwave leakage around door with an approved microwave survey meter. (Refer to Microwave Measurement Procedure.)

Note: The door on a microwave oven is designed to act as an electronic seal preventing the leakage of microwave energy from oven cavity during cook cycle.

This function does not require that door be air-tight, moisture (condensation)-tight or light-tight. Therefore, occasional appearance of moisture, light or sensing of gentle warm air movement around oven door is not abnormal and do not of themselves, indicate a leakage of microwave energy from oven cavity. If such were the case, your oven could not be equipped with a vent, the very purpose of which is to exhaust the vapor-laden air from the oven cavity.

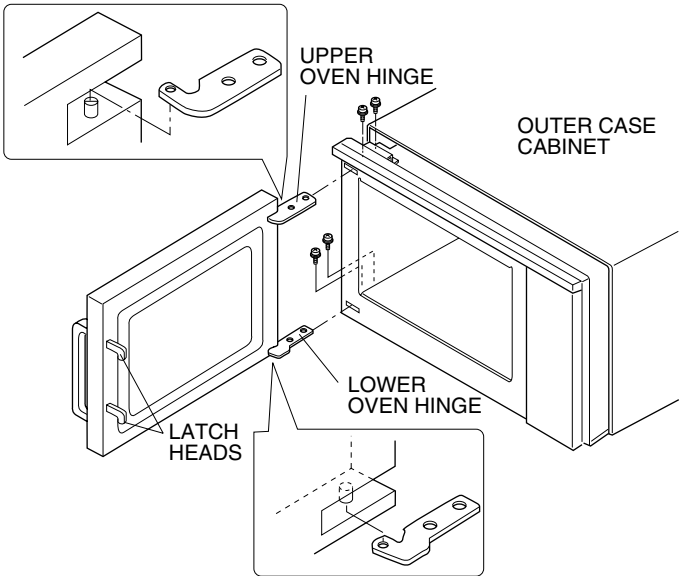

Figure C-4. Door Replacement

DOOR DISASSEMBLY

CHOKE COVER REMOVAL

1. Open the door and insert a putty knife (thickness of about 0.5mm) in gap between the choke cover and corner portion of door panel to free engaging parts. Refer to Fig. C-5.

NOTE: As the choke cover and door panel are engage at 16 places, do not force any perticular part.

2. Remove the choke cover carefully. (If choke cover is broken, replace with a new one.)

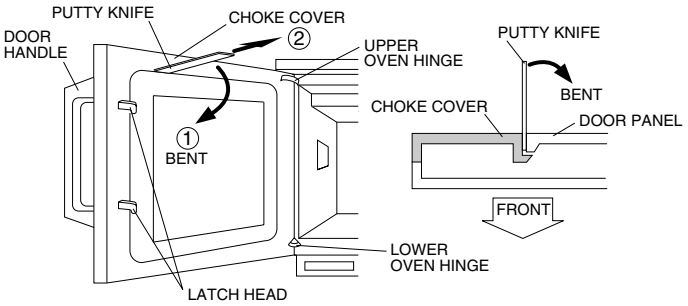

Figure C-5. Choke cover

DOOR COMPONENTS REMOVAL

DOOR HANDLE REMOVAL

1. Remove the door assembly from oven cavity, referring to "DOOR REMOVAL".
2. Place door assembly on a soft cloth with latches facing up.
3. Remove choke cover from door panel, referring to "CHOKE COVER REMOVAL".
4. Remove two (2) screws holding the door handle to door.
5. Remove the door handle from door panel.
6. Now, door handle is free.

UPPER AND LOWER LATCH HEADS REMOVAL

7. Remove the door release lever from the door assembly.
8. Remove the three (3) screws holding the joint plate to the door panel.
9. Release the latch spring from the tab of the joint lever and joint plate.
10. Release the latch heads from joint lever and joint plate.
11. Now, the latch heads are free.

DOOR CASE REMOVAL

1. Remove the door assembly from oven cavity, referring to "DOOR REMOVAL".
2. Remove choke cover from door panel, referring to "CHOKE COVER REMOVAL".
3. Remove door handle from door panel, referring to "DOOR HANDLE REMOVAL".
4. Bend up four (4) nails of door case.
5. Remove door case from door panel.
6. Now, the door case is free.

DOOR GLASS REMOVAL

7. Remove the four (4) screws holding two (2) outside window fixing plates to door panel.
8. Now, the door glass is free.

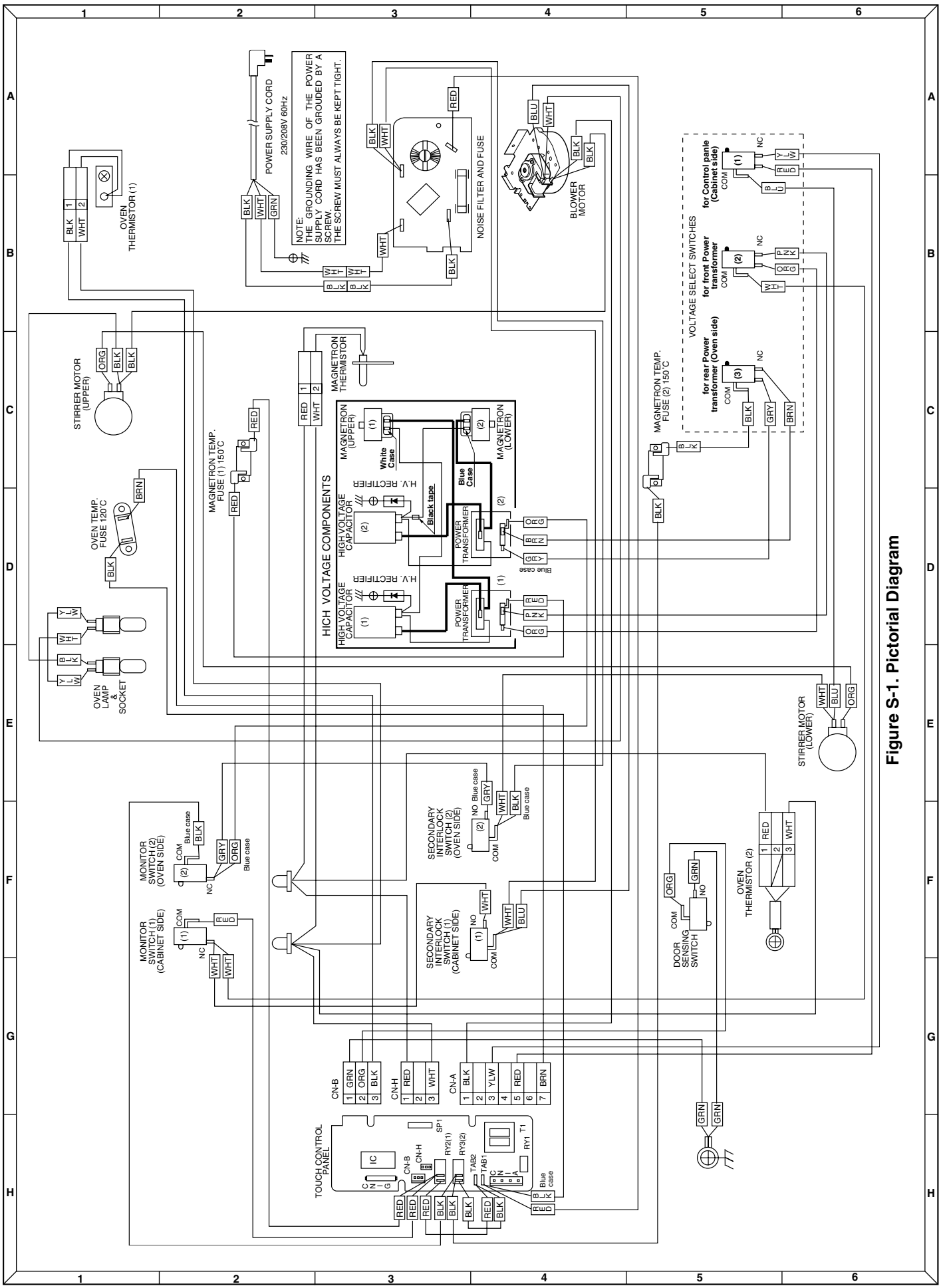

Figure S-1. Pictorial Diagram

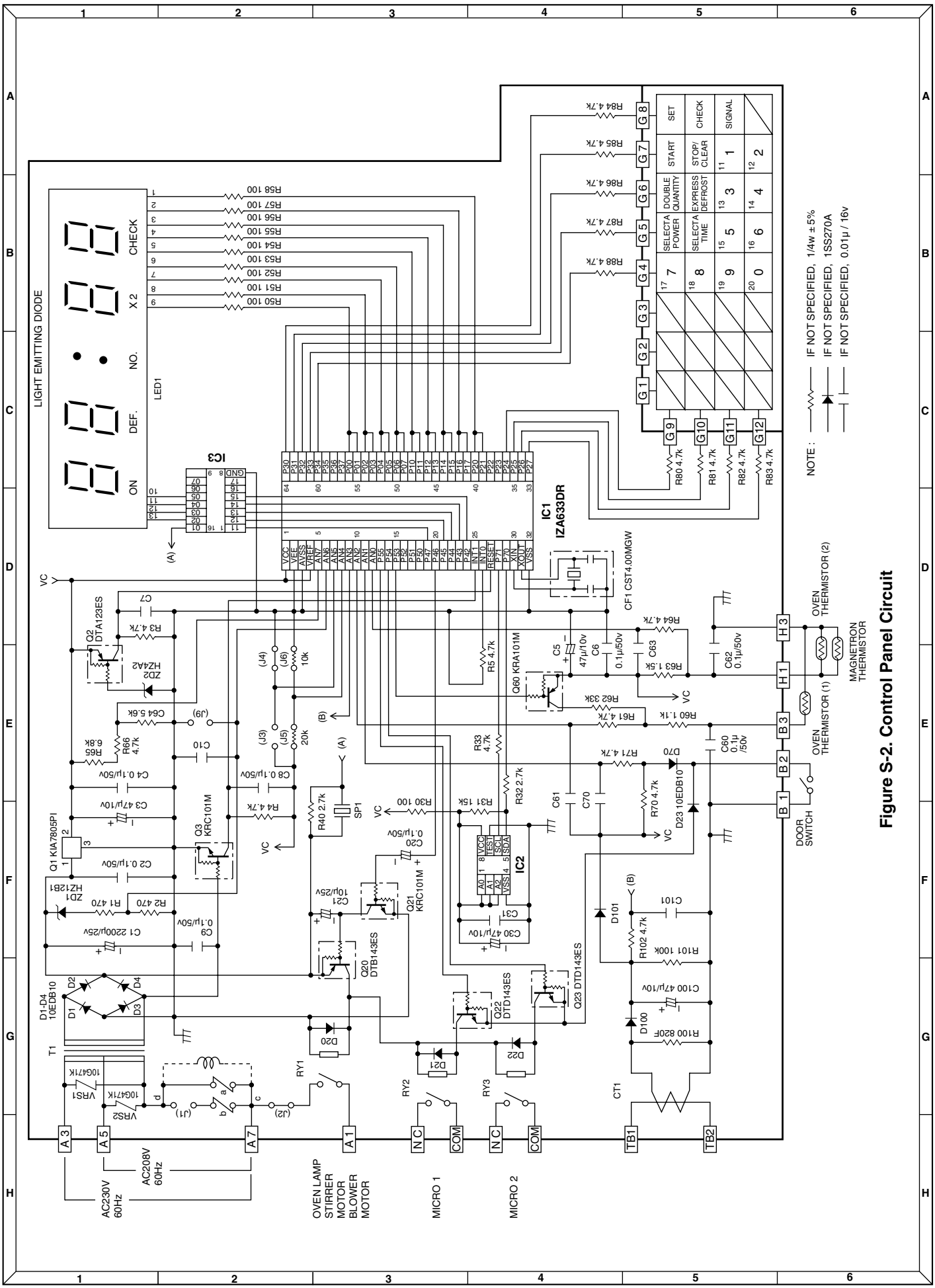

Figure S-2. Control Panel Circuit

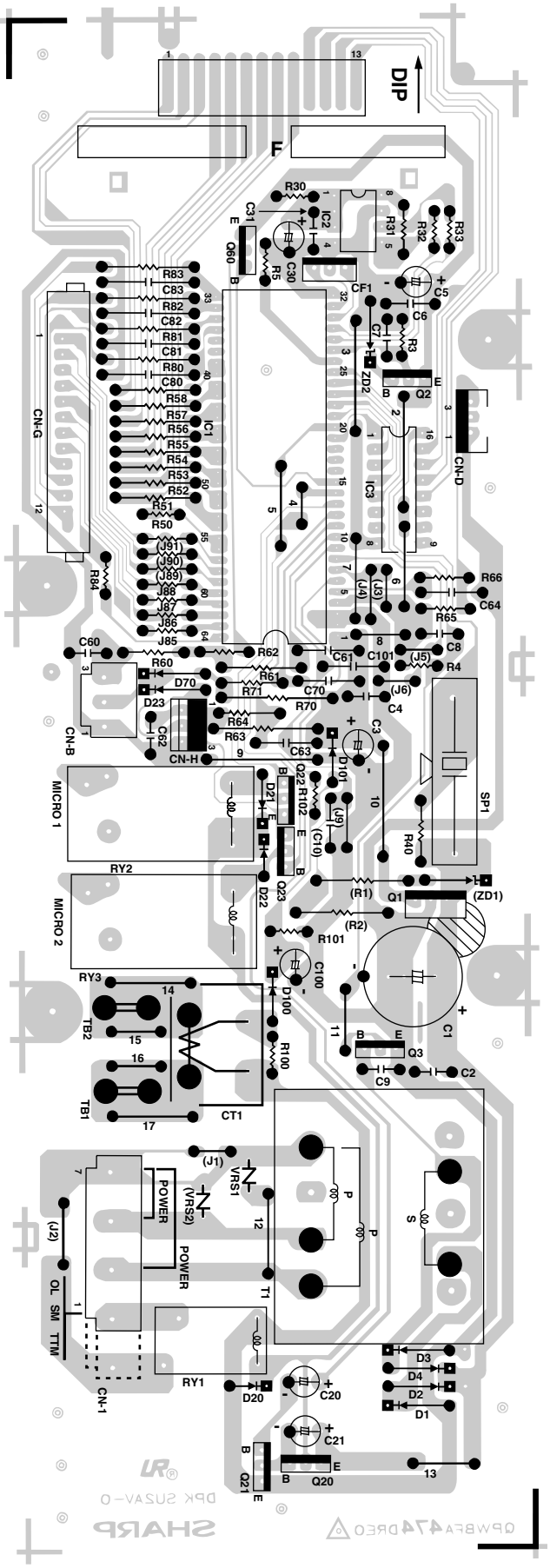

Figure S-3. Printed Wiring Board

PARTS LIST

Note: The parts marked "Δ" may cause undue microwave exposure.
The parts marked "*" are used in voltage more than 250V.

ELECTRIC PARTS

	REF. NO.	PART NO.	DESCRIPTION	Q'TY	CODE
	1- 1	FH-HZA064WRE0	Oven thermistor (2)	1	AV
	1- 2	QSOCLA026WRZZ	Oven lamp socket	2	AF
Δ*	1- 3	RV-MZA295WRE0	Magnetron	2	BF
	1- 4	FMOTEA503WRKZ	Blower motor	1	
	1- 5	FPWBFA383WRKZ	Noise filter	1	AN
	1- 6	FACCDA114WRKZ	Power supply cord	1	AZ
	1- 7	FH-HZA070WRE0	Oven thermistor (1) & Magnetron thermistor	2	AM
*	1- 8	FW-QZA117WRK0	High voltage rectifier assembly	1	AU
	1- 9	FFS-BA033WRKZ	Monitor switch (V-5220Q) and fuse (20A) assembly	2	--
	1-10	QSW-MA087WRE0	Voltage select switch	3	AF
	1-11	QSW-MA085WRE0	Secondary interlok switch and Door sensing switch	3	AF
*	1-12	RC-QZA260WRE0	High voltage capacitor	2	AU
	1-13	RLMPTA081WRZZ	Oven lamp	2	AK
	1-14	RMOTDA209WRE0	Stirrer motor	2	AR
	1-15	QFS-TA014WRE0	Temperature fuse 150C (MG.)	2	AG
	1-16	QFS-TA015WRE0	Temperature fuse 120C (OVEN)	1	AG
*	1-17	RTRN-A594WRE0	Power transformer	2	BM

CABINET PARTS

	2- 1	FDAI-A275WRTZ	Base plate assembly	1	BC
	2- 2	PSHEGA009WREZ	Rubber sheet D	2	AF
	2- 3	PSHEGA010WREZ	Rubber sheet E	2	AE
	2- 4	GCOVAA271WRW0	Rear cabinet	1	AX
	2- 5	FFTASA064WRY0	Oven lamp access cover assembly	1	AN
	2- 5-1	PCUSUA585WRPZ	Cushion	1	AF
	2- 5-2	PREFHA059WRP0	Reflector	1	AF
	2- 6	GCABUA860WRPZ	Outer case cabinet	1	BD
	2- 7	FFPF-A016WRK0	Vibration-proof sheet	1	AU
	2- 8	TMAPCA778WRRZ	Schematic diagram	1	AE

CONTROL PANEL PARTS

	3- 1	DPWBFB975WRU0	Control unit [R-25JT-F]	1	BG
	3- 1A	QCNCMA308DRE0	4-pin connector (A)	1	AC
	3- 1B	QCNCMA312DRE0	3-pin connector (B)	1	AB
	3- 1C	QCNCMA039DRE0	3-pin connector (H)	1	AB
	3- 1D	QCNCWA030DRE0	12-pin connector (G)	1	AE
	3- 1E	QLUGPA012DRE0	Tab terminal (TAB1,TAB2)	2	AB
	C1	VCEAB51EW228M	Capacitor 2200 uF 25V	1	AE
	C2	VCKYD11HF104Z	Capacitor 0.1 uF 50V	1	AB
	C3	VCEAB31AW476M	Capacitor 47 uF 10V	1	AA
	C4	VCKYD11HF104Z	Capacitor 0.1 uF 50V	1	AB
	C5	VCEAB31AW476M	Capacitor 47 uF 10V	1	AA
	C6	VCKYD11HF104Z	Capacitor 0.1 uF 50V	1	AB
	C7	VCKYD11CY103N	Capacitor 0.01 uF 16V	1	AA
	C8-9	VCKYD11HF104Z	Capacitor 0.1 uF 50V	2	AB
	C10	VCKYD11CY103N	Capacitor 0.01 uF 16V	1	AA
	C20	VCEAB31HW104M	Capacitor 0.1 uF 50V	1	AM
	C21	VCEAB31EW106M	Capacitor 10 uF 25V	1	AA
	C30	VCEAB31AW476M	Capacitor 47 uF 10V	1	AA
	C31	VCKYD11CY103N	Capacitor 0.01 uF 16V	1	AA
	C60	VCKYD11HF104Z	Capacitor 0.1 uF 50V	1	AB
	C61	VCKYD11CY103N	Capacitor 0.01 uF 16V	1	AA
	C62	VCKYD11HF104Z	Capacitor 0.1 uF 50V	1	AB
	C63	VCKYD11CY103N	Capacitor 0.01 uF 16V	1	AA
	C64	VRD-Q12EF562J	Resistor 5.6k ohm 1/4W	1	AA
	C70	VCKYD11CY103N	Capacitor 0.01 uF 16V	1	AA
	C100	VCEAB31AW476M	Capacitor 47 uF 10V	1	AA
	C101	VCKYD11CY103N	Capacitor 0.01 uF 16V	1	AA
	CF1	RCRS-A010DRE0	Ceramic resonator CST4.00MGW	1	AD
	D1-4	VHD10EDB10+-1T	Diode (10EDB10)	4	AB
	D20-22	VHD1SS270A/-1	Diode (1SS270A)	3	AA
	D23	VHD10EDB10+-1T	Diode (10EDB10)	1	AB
	D70	VHD1SS270A/-1	Diode (1SS270A)	1	AA
	D100-101	VHD1SS270A/-1	Diode (1SS270A)	2	AA
	IC1	RH-IZA633DRE0	LSI	1	AW
	IC2	RH-IZA980DRE0	IC (AT24C02-10PC2.5)	1	AN
	IC3	RIC--A025BDE0	IC (KID65004AP)	1	AE

REF. NO.	PART NO.	DESCRIPTION	Q'TY	CODE
LED1	VHPSL3966T/1B	Light emitting diode	1	AS
Q1	RIC--A022BDE0	IC (KIA7805PI)	1	AE
Q2	VSDTA123ES/-3	Transistor (DTA123ES)	1	AA
Q3	RH-TZA036CBE0	Transistor (KRC101M)	1	AA
Q20	VSDTB143ES/-3	Transistor (DTB143ES)	1	AC
Q21	RH-TZA036CBE0	Transistor (KRC101M)	1	AA
Q22-23	VSDTD143ES/-3	Transistor (DTD143ES)	2	AC
Q60	RH-TZA037CBE0	Transistor (KRA101M)	1	AA
R1-2	VRD-Q12EF471J	Resistor 470 ohm 1/4W	2	AA
R3-5	VRD-Q12EF472J	Resistor 4.7k ohm 1/4W	3	AA
R30	VRD-Q12EF101J	Resistor 100 ohm 1/4W	1	AA
R31	VRD-Q12EF153J	Resistor 15k ohm 1/4W	1	AA
R32	VRD-Q12EF272J	Resistor 2.7k ohm 1/4W	1	AA
R33	VRD-Q12EF472J	Resistor 4.7k ohm 1/4W	1	AA
R40	VRD-Q12EF272J	Resistor 2.7k ohm 1/4W	1	AA
R50-58	VRD-Q12EF101J	Resistor 100 ohm 1/4W	9	AA
R60	VRD-Q12EF112J	Resistor 1.1k ohm 1/4W	1	AA
R61	VRD-Q12EF472J	Resistor 4.7k ohm 1/4W	1	AA
R62	VRD-Q12EF333J	Resistor 33k ohm 1/4W	1	AG
R63	VRD-Q12EF152J	Resistor 1.5k ohm 1/4W	1	AA
R64	VRD-Q12EF472J	Resistor 4.7k ohm 1/4W	1	AA
R65	VRD-Q12EF682J	Resistor 6.8k ohm 1/4W	1	AA
R66	VRD-Q12EF472J	Resistor 4.7k ohm 1/4W	1	AA
R70-71	VRD-Q12EF472J	Resistor 4.7k ohm 1/4W	2	AA
R80-88	VRD-Q12EF472J	Resistor 4.7k ohm 1/4W	9	AA
R100	VRN-R12EK821F	Resistor 820 ohm (F) 1/4W	1	AA
R101	VRD-Q12EF104J	Resistor 100k ohm 1/4W	1	AA
R102	VRD-Q12EF472J	Resistor 4.7k ohm 1/4W	1	AA
(J5)	VRD-Q12EF203J	Resistor 20k ohm 1/4W	1	AA
(J6)	VRD-Q12EF103J	Resistor 10k ohm 1/4W	1	AA
RY1	RRLY-A071DRE0	Relay (OJE-SS-112LM)	1	AG
RY2-3	RRLY-A094DRE0	Relay (OMIF-S-112LM)	2	AN
SP1	RALM-A014DRE0	Buzzer (PKM22EPT)	1	AG
T1	RTRNPA095DRE0	Touch control transformer	1	AU
CT1	RTRN-026CHRE0	Current transformer	1	AH
VRS1-2	RH-VZA034DRE0	Varistor (10G471K)	2	AD
ZD1	VHEHZ12B1//-1	Zener diode (HZ12B1)	1	AB
ZD2	VHEHZ4A2///-1	Zener diode (HZ4A2)	1	AA
3- 2	FPNLCB468WRK0	Control panel frame with key unit	1	AZ
3- 2-1	FUNTKA773WRE0	Key unit	1	AT
3- 2-2	HDECAA195WRP0	Decoration metal fittings	1	AP
3- 2-3	PCUSUA417WRP0	Cushion	1	AB
3- 3	LANGTA243WRW0	Control panel mounting angle	1	AF
3- 4	XEPS730P10XS0	Screw; control unit mounting	5	AA
3- 5	XEPS740P12000	Screw; control panel mounting angle mounting	2	AA
3- 6	LX-BZA138WREZ	Screw; decoration panel mounting for earth	1	AB

OVEN PARTS

	4- 1	PGLSPA632WREZ	Lamp glass	1	AG
	4- 2	FDUC-A345WRY0	Exhaust duct assembly	1	AP
Δ	4- 3	**********	Oven cavity (Not a replaceable part)	1	--
	4- 4	PFILWA063WRPZ	Oven light screen (Inside)	1	AD
	4- 5	MLEVPA153WRF0	Switch lever A	1	AC
	4- 6	MLEVPA154WRF0	Switch lever B	1	AC
	4- 7	MLEVPA155WRF0	Switch lever C	1	AC
	4- 8	MSPRCA075WRE0	Switch spring A	1	AB
	4- 9	MSPRCA076WRE0	Switch spring B	2	AB
Δ	4-10	PHOK-A081WRF0	Latch hook	1	AP
Δ	4-11	MHNG-A216WRM0	Lower oven hinge	1	AG
	4-12	PSPAGQ002YBE0	Vibration-proof spacer	1	AA
	4-13	PCUSU0407WRP0	Cushion	2	AA
	4-14	FGLSPA067WRYZ	Ceramic shelf	1	BH
	4-15	FPLT-A008WRY0	Stirrer antenna upper assembly	1	AV
	4-16	FPLT-A009WRY0	Stirrer antenna lower assembly	1	AV
	4-17	LANGKA762WRP0	Partition angle R	1	AE
	4-18	LANGQA228WRW0	Oven lamp mounting plate	1	AF
	4-19	LBNDKA068WRP0	Capacitor holder	1	AD
	4-20	PGIDHA054WRW0	Water-proof cover	1	AF
	4-21	NSFTPA031WRF0	Antenna motor shaft	2	AH
	4-22	LANGQA622WRPZ	Noise filter angle	1	AK
	4-23	PCUSUA417WRP0	Cushion	1	AB
Δ	4-24	MHNG-A215WRM0	Upper oven hinge	1	AG
	4-25	PCUSUA413WRP0	Cushion	1	AG
	4-26	PCUSUA415WRP0	Cushion	3	AC

REF. NO.	PART NO.	DESCRIPTION	Q'TY	CODE
4-27	PDUC-A729WRF0	Air duct	1	AL
4-28	PDUC-A564WRW0	Mg exhaust duct	1	AP
4-29	PCUSUA414WRP0	Cushion	1	AD
4-30	LANGKA679WRPZ	Fixing angle S	1	AD
4-31	HDECQA147WRM0	Corner cap right	1	AE
4-32	LANGFA195WRW0	Chassis support	1	AG
4-33	LBSHCA014WRE0	Cord bushing	1	AF
4-34	LANGQA593WRPZ	Blower motor angle	1	AH
4-35	FFIL-A003WRK0	Air intake filter assembly	1	AV
4-36	HDECEA001WRP0	Decoration sash	1	AR
4-37	HDECQA146WRM0	Corner cap left	1	AE
4-38	PCUSGA409WRP0	Cushion	2	AE
4-39	PCOVPA422WRFZ	Splash cover	1	BK
4-40	LANGQA512WRP0	Thermistor angle	1	AE
4-41	LANGKA475WRP0	Switch mounting angle	1	AD
4-42	LANGKA760WRP0	Switch lever	1	AE
4-43	PCUSUA268WRP0	Cushion	1	AA
4-44	MSPRCA101WRE0	Switch lever spring C	1	AC
4-45	LSUB-A133WRPZ	Thermo contactor	1	AD
4-46	LANGTA408WRWZ	Lamp glass mounting plate	1	AK
4-47	PSPA-A114WRF0	Switch spacer	1	AC
4-48	LSUB-A134WRPZ	Hinge support angle	1	AD

DOOR PARTS

Δ	5	CDORFB029WRKZ	Door assembly	1	BT
	5- 2	GCOVAA242WRY0	Door case	1	BD
	5- 3	FHNDMA011WRY0	Door lever assembly	1	AP
Δ	5- 4	GCOVHA350WRF0	Choke cover	1	AR
	5- 5	JHNDMA039WRM0	Door handle	1	AX
	5- 6	LANGKA766WRP0	Outside window fixing plate	2	AF
	5- 7	PCUSGA430WRP0	Cushion	2	AM
	5- 8	PGLSPA457WRE0	Door glass	1	AV
	5- 9	PPACGA142WRP0	Door case packing	2	AF
	5-10	PGID-0024WRF0	Handle guide	4	AC
	5-11	PGID-0025WRF0	Handle spacer	1	AC
	5-12	PSPA-A102WRE0	Door case spacer	2	AE
	5-13	XHTS740P08RV0	Screw : 4mm x 8mm	9	AG
	5-14	FANGKA200WRY0	Latch fixing angle	1	AQ
	5-15	FLEVFA019WRY0	Joint lever	1	AP
Δ	5-16	LSTPCA002WRM0	Latch head	2	AM
	5-17	MLEVPA220WRF0	Head lever	1	AM
	5-18	MSPRCA097WRE0	Latch spring	1	AG
	5-19	HBDGCA090WRE0	Door badge	1	AF
	5-20	PCUSGA486WRP0	Handle cushion	1	AM

MISCELLANEOUS

	6- 1	TINSEB105WRRZ	Instruction manual	1	AG
	6- 2	TLABHA024WRR0	Menu sticker	1	AH
	6- 3	FW-VZB755WRE0	Switch harness	1	AQ
	6- 4	FW-VZC077WREZ	Main wire harness	1	BD
	6- 5	LHLDWQ005YBE0	Purse lock LL	1	AA
	6- 6	LBNDKA079WRE0	Wire holder	3	AB
	6- 7	FW-VZC039WREZ	Supply harness	1	AL
	6- 8	TCAUAA130WRR0	Lamp caution	1	AC
	6- 9	QW-QZA238WRE0	High voltage wire	2	AF
*	6-10	TCAUAA288WRRZ	Monitor caution label	1	AD
	6-11	TCAUA0165WRR0	DHHS caution label	1	AB
	6-12	TCAUAA279WRRZ	Voltage caution label	1	AF
	6-13	LHOLDA004WRE0	Cord holder	1	AA
	6-14	TCAUAA181WRR0	Filter caution label	1	AC
	6-15	TCAUAA165WRR0	User caution	1	AC
	6-16	LHLDWQ004YBE0	Purse lock L	1	AA

SCRE,NUTS AND WASHERS

7- 1	XCBWW30P08000	Screw : 3mm x 8mm	6	AB
7- 2	XBPS730P28KS0	Screw : 3mm x 28mm	2	AB
7- 3	XNES730-24000	Nut : 3mm x 2.4mm	4	AE
7- 4	LX-BZA130WRE0	Special screw	1	AD
7- 5	LX-BZA116WRE0	Special screw	2	AD
7- 6	LX-BZA041WRE0	Special screw	2	AA
7- 7	LX-BZA132WREZ	Special screw	4	AB
7- 8	LX-BZA138WREZ	Special screw	11	AB
7- 9	LX-BZA139WREZ	Special screw	1	AA

REF. NO.	PART NO.	DESCRIPTION	Q'TY	CODE
7-10	LX-EZA004WRE0	Special screw	2	AA
7-11	XOTS740P06000	Screw : 4mm x 6mm	1	AA
7-12	LX-NZ0082WRE0	Special nut	1	AA
7-13	LX-BZA152WREZ	Special screw	1	AB
7-14	LX-BZA164WREZ	Special screw	12	AC
7-15	LX-CZA095WREZ	Special screw	3	AB
7-16	LX-WZA035WRE0	Special washer	1	AB
7-17	XOTS740P10RV0	Screw : 4mm x 10mm	3	AB
7-18	XOTS740P08000	Screw : 4mm x 8mm	6	AA
7-19	XCHWW40P08000	Screw : 4mm x 8mm	2	AB
7-20	XBPS730P50K00	Screw : 3mm x 50mm	2	
7-21	XJPS740P10000	Screw : 4mm x 10mm	3	AA
7-22	XOTWW40P08000	Screw : 4mm x 8mm	32	AB
7-23	LX-BZA169WREZ	Special screw	4	AC

HOW TO ORDER REPLACEMENT PARTS

To have your order filled promptly and correctly, please furnish the following information.

1. MODEL NUMBER 2. REF. NO. 3. PART NO. 4. DESCRIPTION

Order Parts from the authorized SHARP parts Distributor for your area.
Defective parts requiring return should be returned as indicated in the Service Policy.

PACKING AND ACCESSORIES

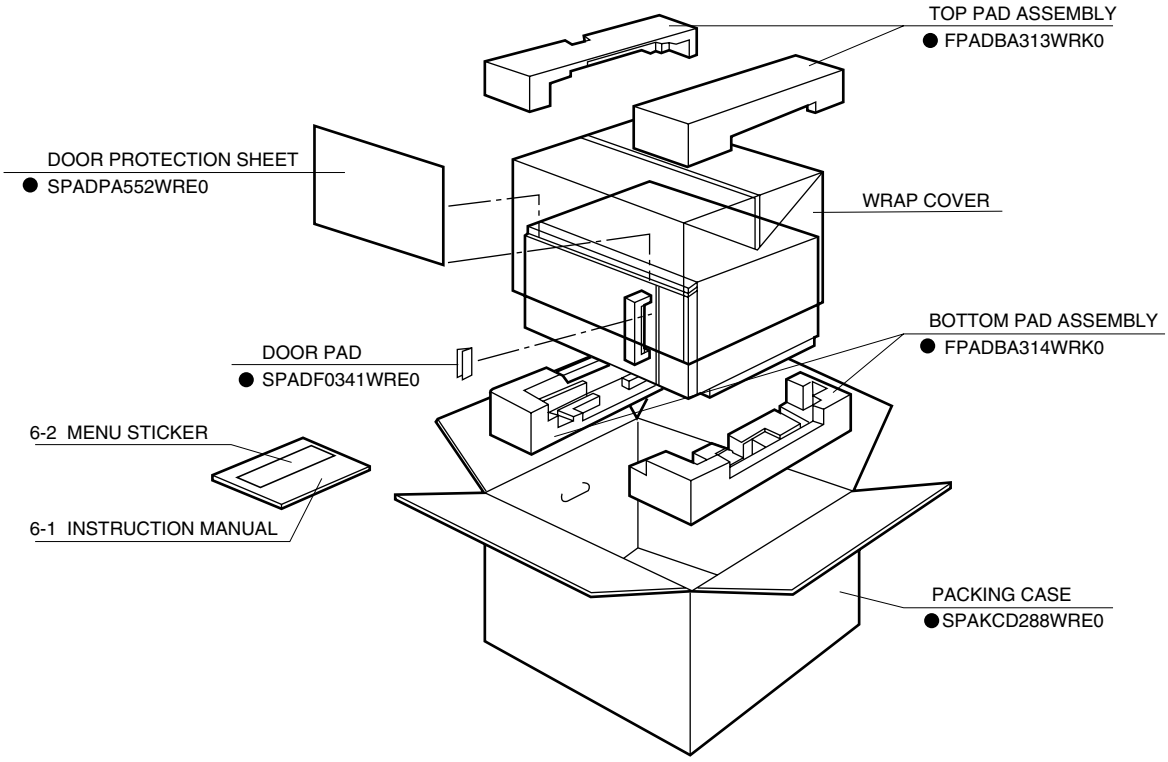

● Not replaceable items.

OVEN AND CABINET PARTS

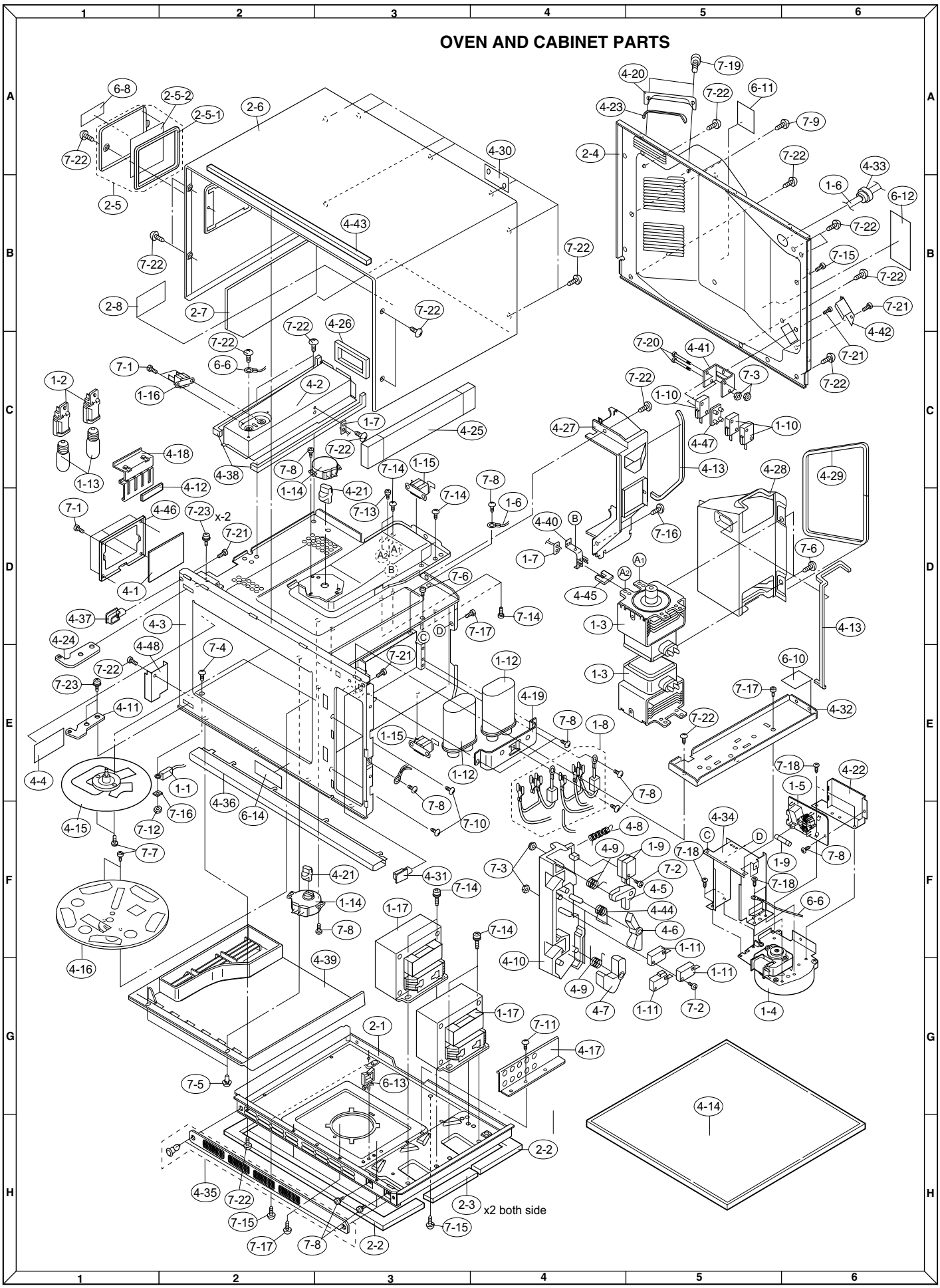

CONTROL PANEL PARTS

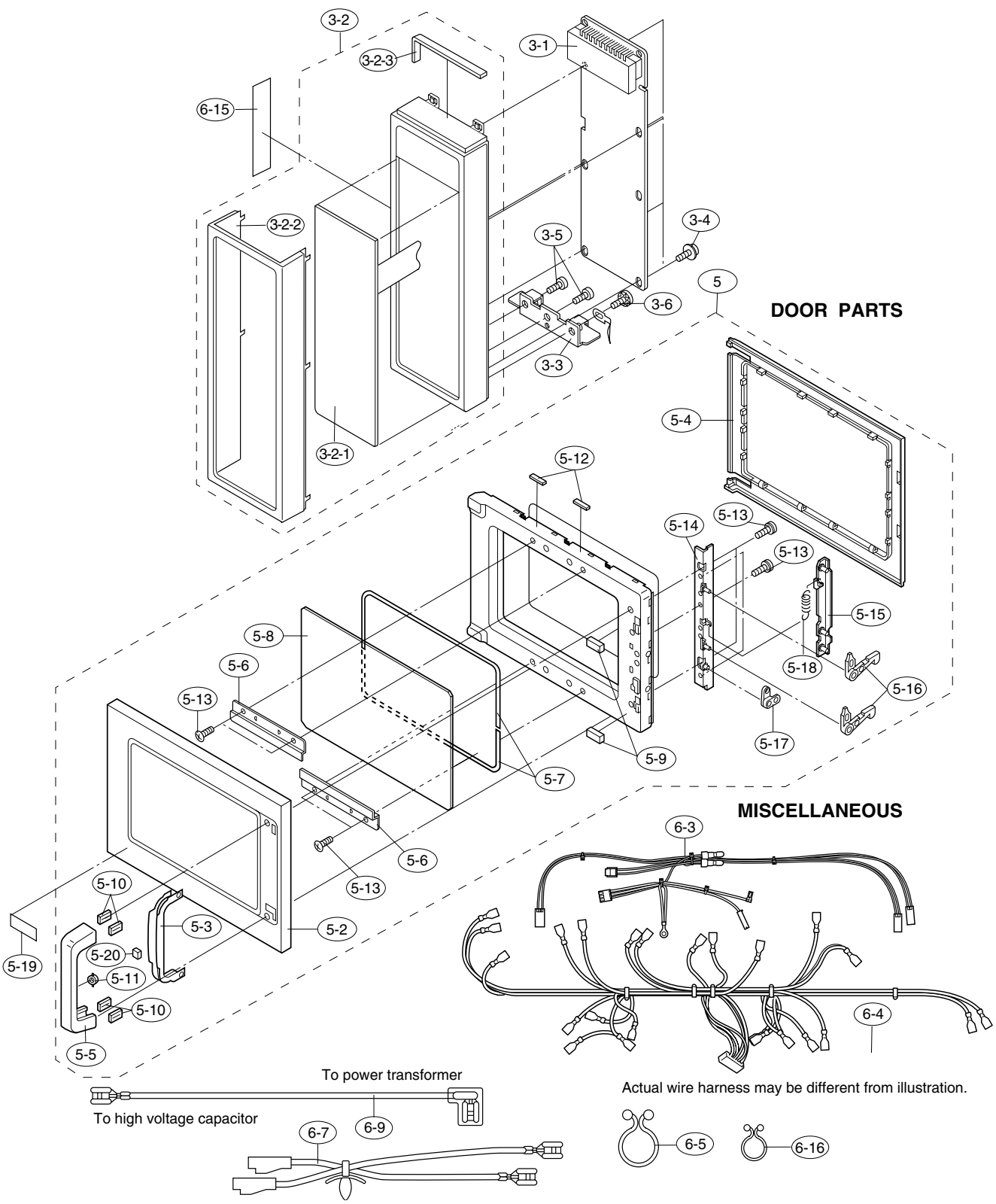

SHARP

COPYRIGHT © 2005 BY SHARP CORPORATION

ALL RIGHTS RESERVED.

No part of this publication may be reproduced, stored in retrieval systems, or transmitted in any form or by any means, electronic, mechanical, photocopying, recording, or otherwise, without prior written permission of the publisher.