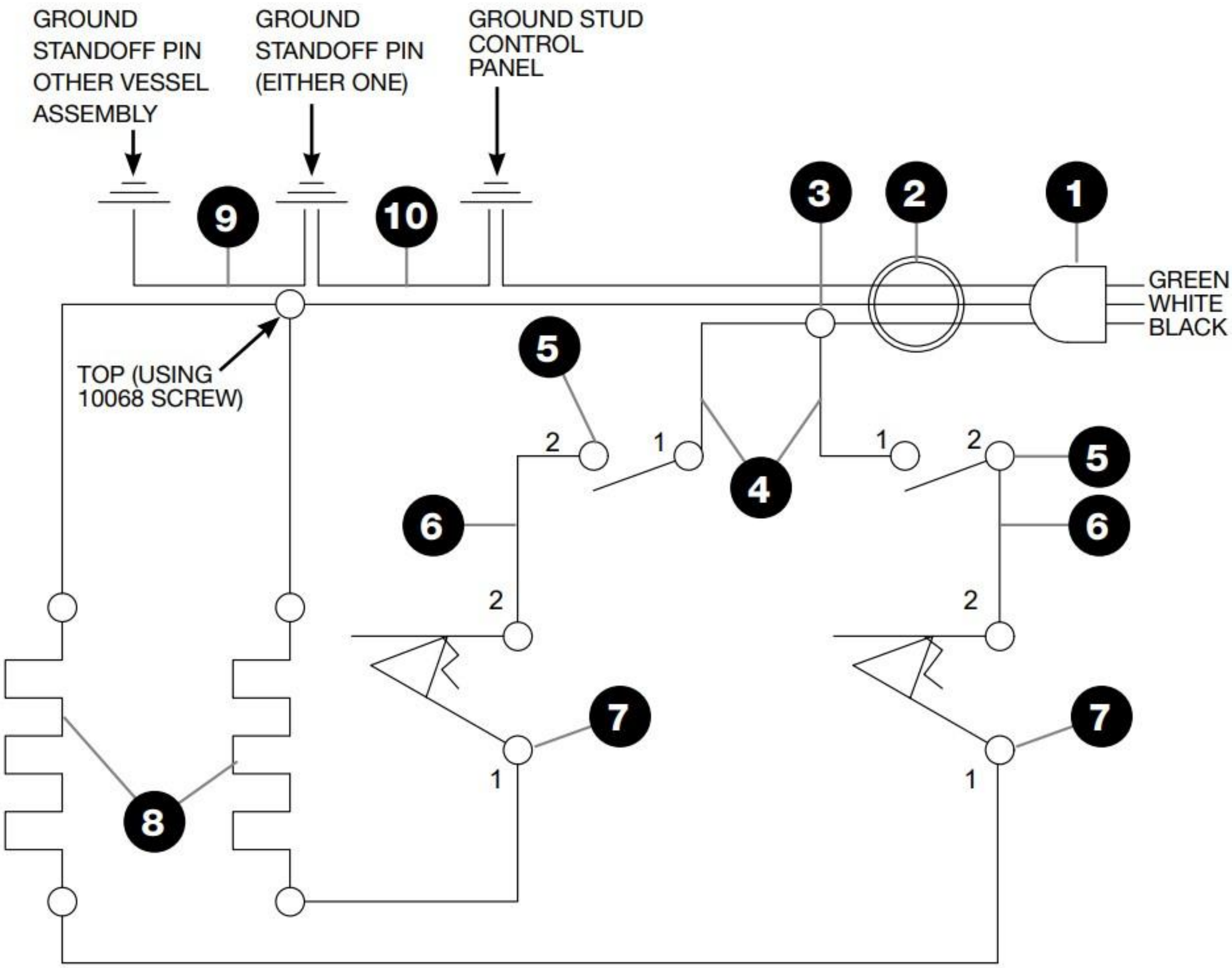
GROUND STANDOFF PIN OTHER VESSEL ASSEMBLY
GROUND STANDOFF PIN (EITHER ONE)
GROUND STUD CONTROL PANEL
9
10
3
2
1
GREEN
WHITE
BLACK
TOP (USING 10068 SCREW)
5
2
1
1
2
5
4
6
6
2
2
7
7
1
1
8