SERVER

**Server Products Inc.**
3601 Pleasant Hill Road
Richfield, WI 53076 USA

262.628.5600 | 800.558.8722

SPSALES@SERVER-PRODUCTS.COM

# 83110

## Condiment Pump CP-G 120MM

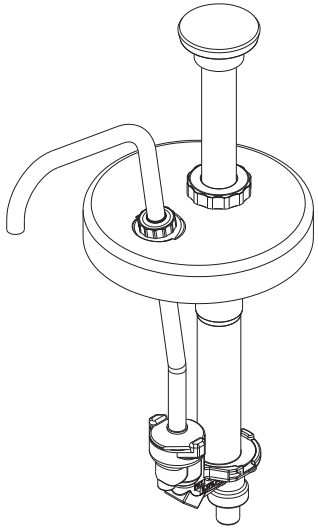
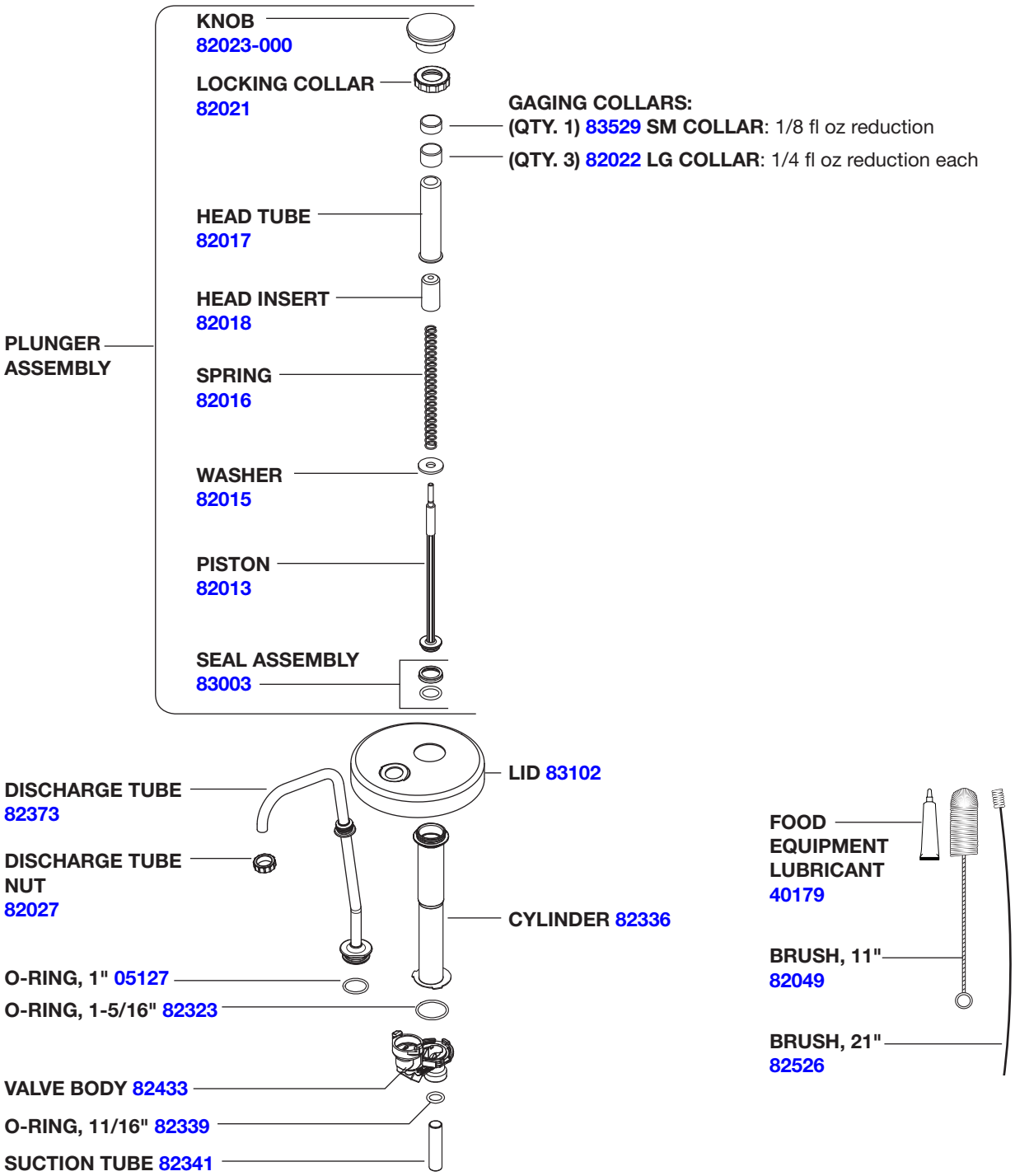
*Complete View for Reference*