NME1250R SERVICE PARTS

This parts list contains the part numbers and descriptions of the service parts for the NME1250R remote ice machine.

Table of Contents

PANELS ..... Page 2

REFRIGERATION ..... Page 3

EVAPORATOR ..... Page 4

CONTROL BOX ..... Page 5

GEARMOTOR ..... Page 6

RESERVOIR, DRAINS, ICE CHUTE, ICE LEVEL SENSORS ..... Page 7

REMOTE CONDENSER ..... Page 8

Component Layout Diagram ..... Page 9

Schematic Diagram ..... Page 10

NME1250R SERVICE PARTS
PANELS

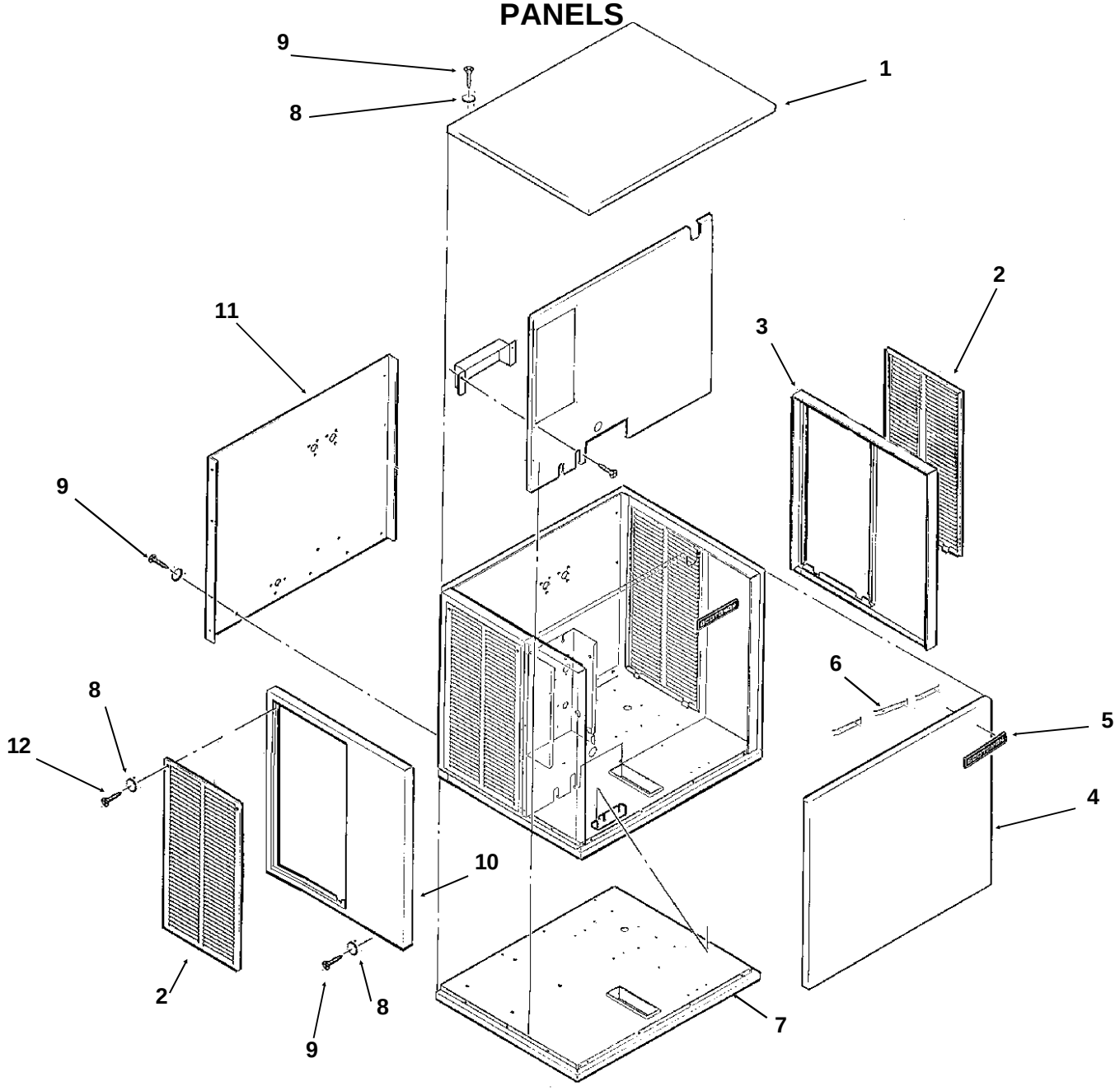

ITEM NUMBER	PART NUMBER	DESCRIPTION
1.	A32159-001	Top Panel sandalwood
	A32159-015	Top panel, gray
	A32159-002	Top Panel Stainless
2.	A32161-001	Service Panel sandalwood
	A32161-015	Service panel, gray
	A33946-002	Service Panel for S.S.
3.	A32162-001	Right End Panel sandalwood
	A32162-015	Right end panel, gray
	A32162-002	Right End Panel S.S.
4.	A32160-001	Front Panel sandalwood
	A32160-015	Front panel, gray
	A32160-002	Front Panel S.S.

ITEM NUMBER	PART NUMBER	DESCRIPTION
5.	15-0711-01	Emblem for sandalwood
	15-0711-02	Emblem for stainless or gray
6.	03-0271-00	Clip For Emblem (3)
7.	A35955-001	Base Assembly
8.	03-1417-27	Washer
9.	03-1531-01	Screw
10.	A32163-001	Left End Panel sandalwood
	A32163-015	Left end panel, gray
	A32163-002	Left End Panel S.S.
11.	A32201-003	Back Panel SS
	A32201-015	Back panel, gray
	A32201-001	Back panel, sandalwood
12.	03-1404-12	Screw

NME1250R SERVICE PARTS
REFRIGERATION

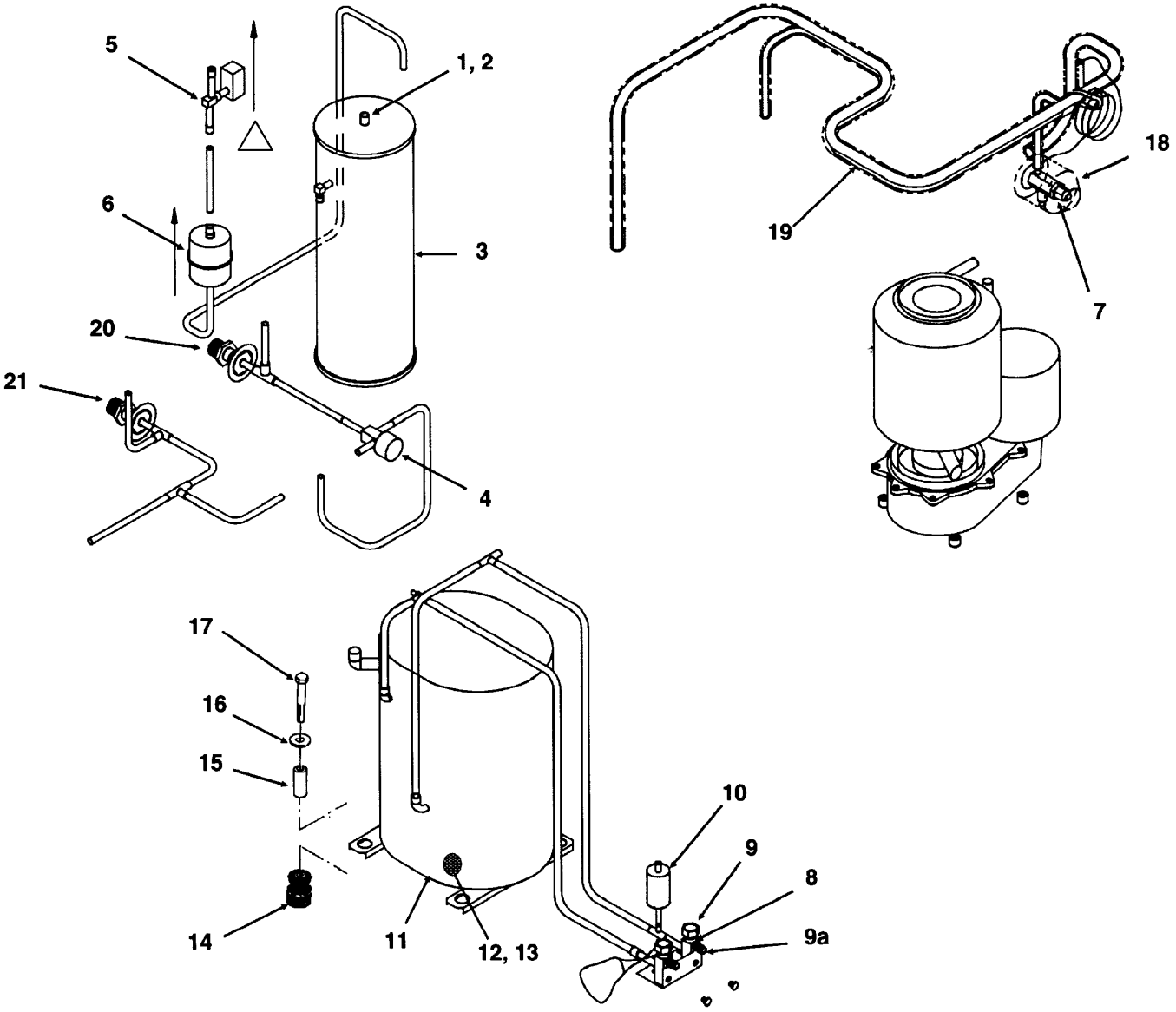

ITEM NUMBER	PART NUMBER	DESCRIPTION
1.	03-1406-13	Nut
2.	03-1410-06	Washer
3.	16-0761-01	Receiver
4.	11-0422-25	Lo Temp Valve
5.	12-2135-22	Liquid Line Valve
6.	02-3319-02	Drier
7.	11-0482-21	Thermo. Exp. Valve
8.	16-0832-20	Access valve
9.	16-0832-02	Stem cap
9a	16-0832-03	Core cap
10.	11-0485-21	High Press. Switch
11.	18-8726-23	Compressor 208-230/60/1 (includes item 12)

ITEM NUMBER	PART NUMBER	DESCRIPTION
12.	12-2308-01	Heater
13.	12-2309-01	clip
14.	18-2200-28	Grommet
15.	18-2200-27	Sleeve
16.	03-1407-07	Washer
17.	03-1405-20	Bolt
18.	A31961-020	TXV insulation
19.	no number	Suction line
20	16-0850-03	Quick connect, 3/8
21	16-0850-01	Quick connect, 1/2"
Not shown, parts to attach receiver:		
	03-1645-01	Screw
	03-1417-09	Washer
	A31801-002	Lower Bracket

NME1250R SERVICE PARTS
EVAPORATOR

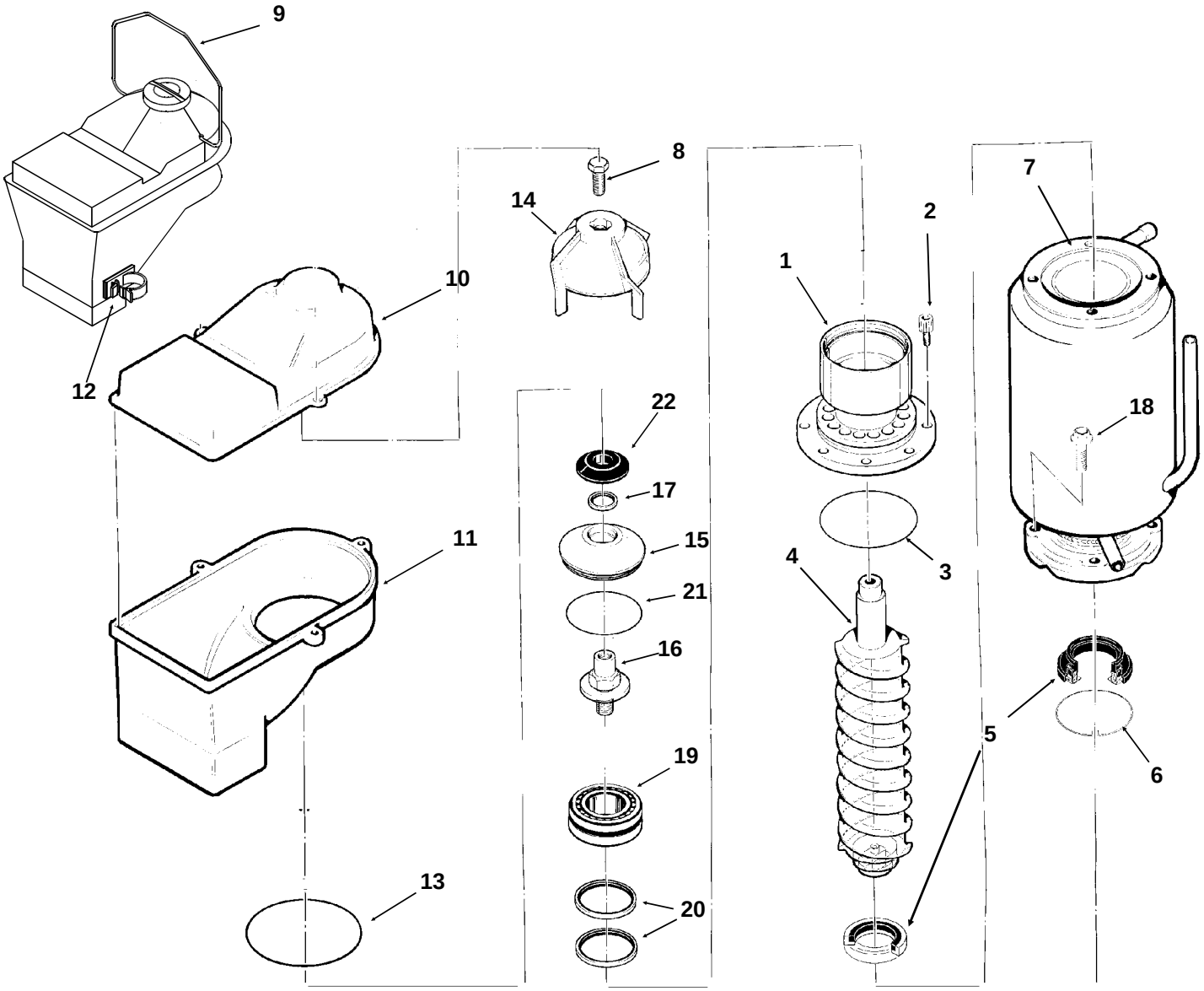

ITEM NUMBER	PART NUMBER	DESCRIPTION
1.	A32900-020	Breaker & bearing
2.	03-1544-08	Soc. head Screw
3.	13-0617-45	O-ring
4.	02-3003-01	Auger
5.	02-0929-03	Water Seal
6.	A32777-001	Ring, Water Seal
7.	A32890-020	Evaporator
8.	03-1405-52	Hex Cap Screw
9.	A34969-001	Bail clamp

Note: Evaporator is not available with internal parts.

ITEM NUMBER	PART NUMBER	DESCRIPTION
10.	02-2930-04	Ice Chute Cover
11.	02-2926-01	Ice Chute Body
12.	02-3268-01	Drain hose clip
13.	13-0617-52	O-ring
14.	02-3001-01	Ice Sweep
15.	02-3128-01	Breaker Cover
16.	08-0660-01	Auger Stud
17.	02-2978-01	Lip Seal
18.	03-1420-03	Cap screw
19.	A34559-020	Bearing
20.	02-2977-01	Lip Seal
21.	13-0617-54	O-Ring
22.	13-0871-01	Water Shed

NME1250R SERVICE PARTS
CONTROL BOX

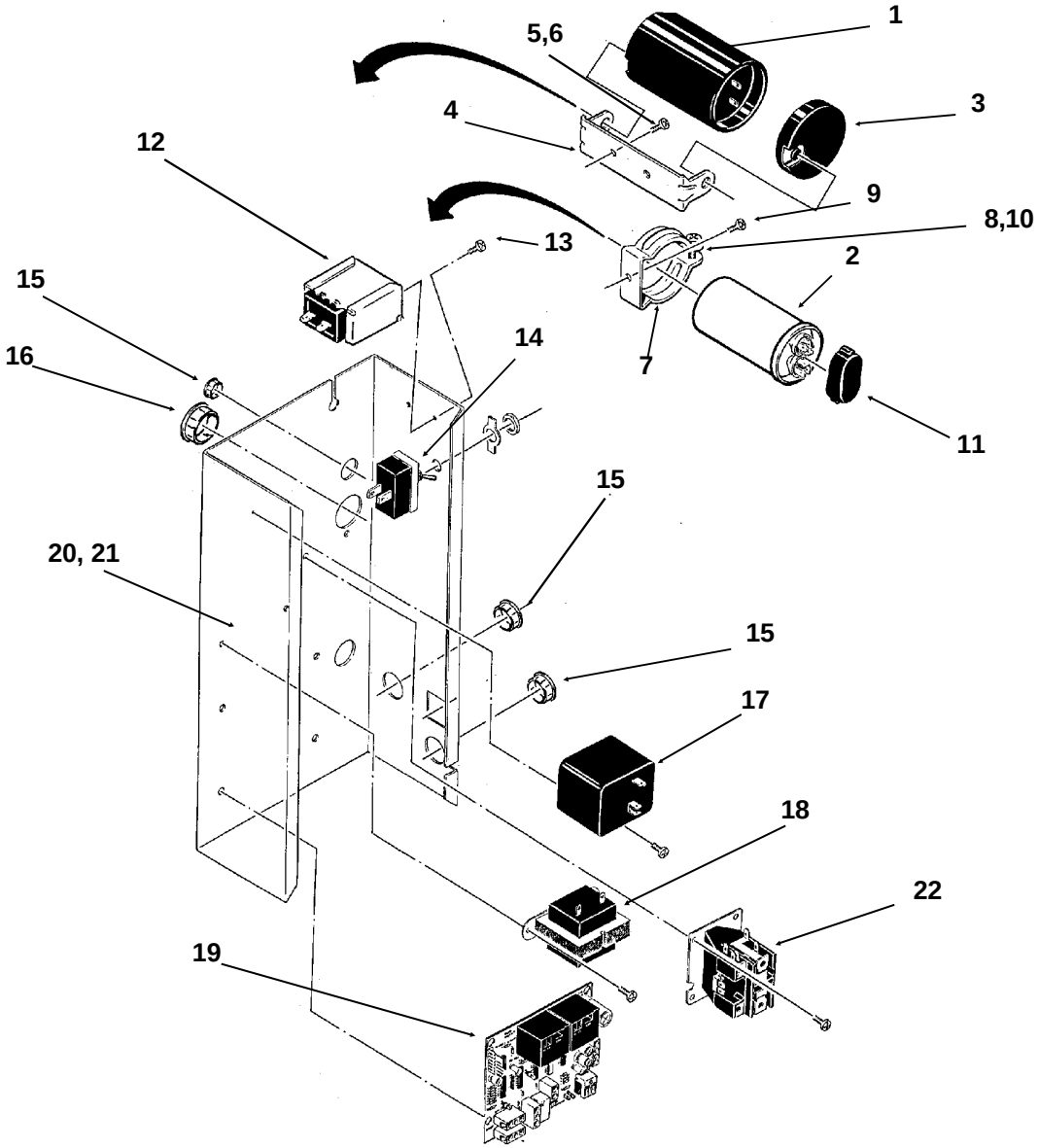

ITEM NUMBER	PART NUMBER	DESCRIPTION
1.	18-1901-15	Start Capacitor
2.	18-1902-53	Run Capacitor
3.	18-4300-50	Start Capacitor Cap
4.	18-2200-39	Start Cap. Bracket
5.	03-1638-04	Screw
6.	03-1417-15	Lockwasher
7.	A32872-001	Run Cap. Bracket
8.	03-1652-02	Bolt
9.	03-1638-03	Screw
10.	03-0255-04	Wing Nut
11.	13-0666-00	Terminal Cover
12.	11-0420-24	Pump Down Control
13.	03-1403-02	Screw
14.	12-0426-01	Master Switch

ITEM NUMBER	PART NUMBER	DESCRIPTION
15.	12-1213-10	Snap Bushing
16.	12-1213-11	Snap Bushing
17.	18-1903-33	Relay
18.	12-2285-22	Transformer
19.	A37750-021	Circuit Board
20.	No Number	Control Box
21.	A32896-001	Cont. Box Cover
22.	12-2469-02	1 Phase Contactor

NOT ILLUSTRATED

23.	12-2337-02	3 pin plug assy (safety circuit to circuit board)
24.	12-2340-01	4 pin plug assy (transformer to circuit board)

NME1250R SERVICE PARTS
GEARMOTOR

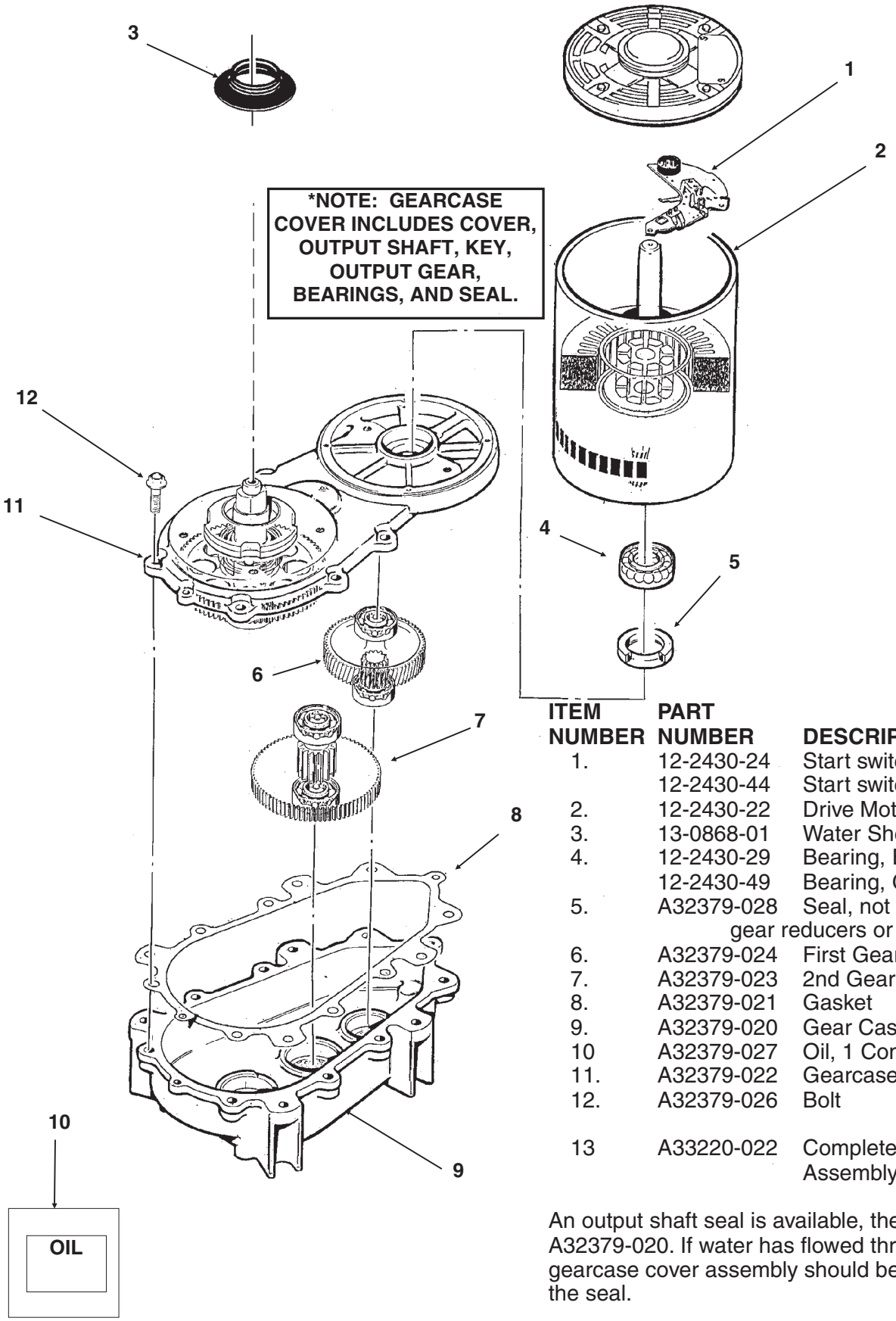

ITEM NUMBER	PART NUMBER	DESCRIPTION
1.	12-2430-24	Start switch, Emerson
	12-2430-44	Start switch, GE split phase
2.	12-2430-22	Drive Motor 208-230 Volt
3.	13-0868-01	Water Shed.
4.	12-2430-29	Bearing, Emerson
	12-2430-49	Bearing, GE split phase
5.	A32379-028	Seal, not used in replacement gear reducers or covers after 2/2000
6.	A32379-024	First Gear & Bearing
7.	A32379-023	2nd Gear & Bearing
8.	A32379-021	Gasket
9.	A32379-020	Gear Case
10	A32379-027	Oil, 1 Container
11.	A32379-022	Gearcase Cover*
12.	A32379-026	Bolt
13	A33220-022	Complete Gearmotor Assembly. 208-230 v.

An output shaft seal is available, the part number is A32379-020. If water has flowed thru the seal, the gearcase cover assembly should be replaced, not just the seal.

NME1250R SERVICE PARTS

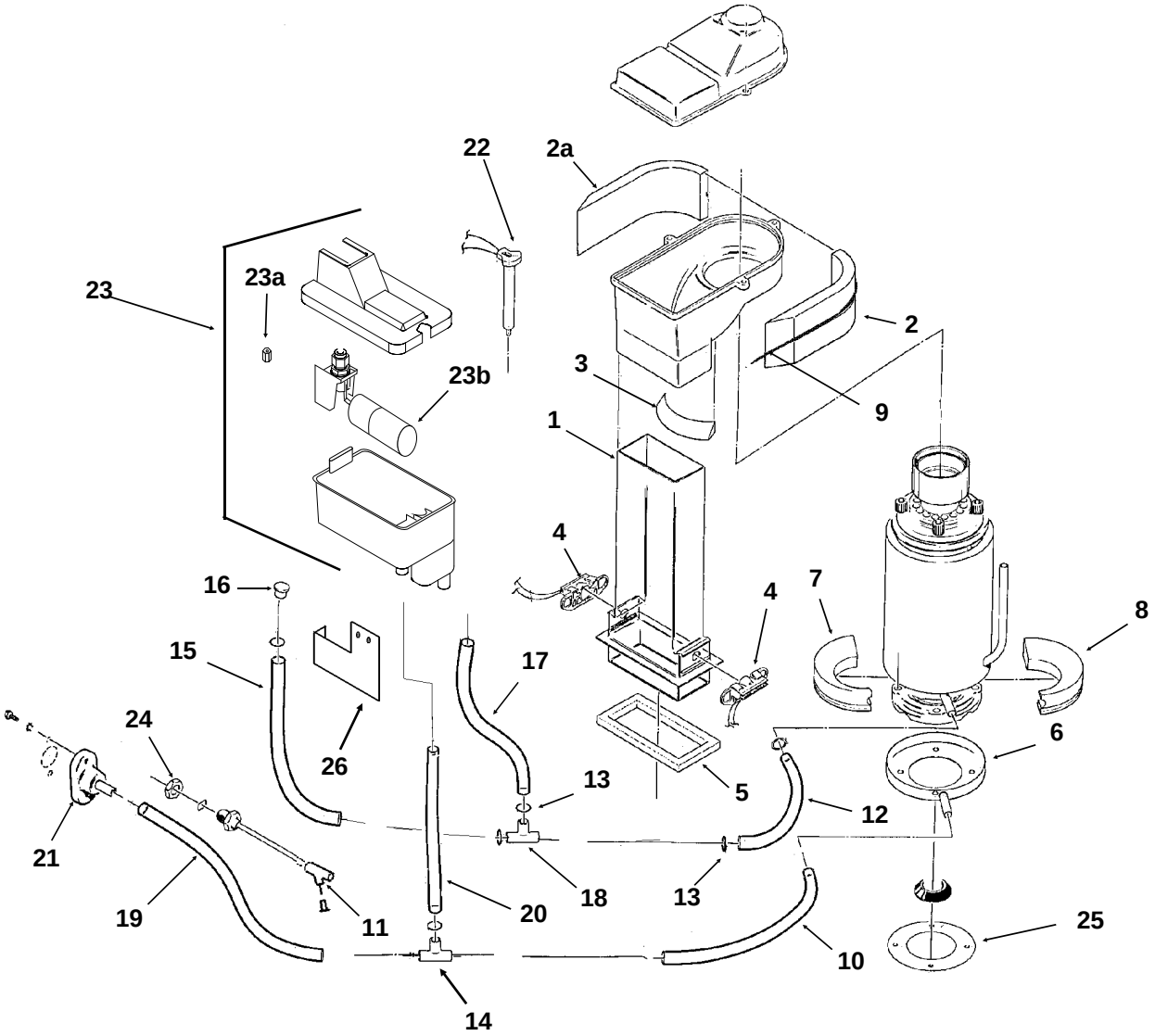

ITEM NUMBER	PART NUMBER	DESCRIPTION
1.	02-2929-04	Ice Chute Lower
2.	A32963-001	Insulation collar, top
2a	A32963-002	Insulation collar, top
3.	A33102-001	Insulation Collar Inside
4.	A33117-020	Ice level sensor set
5.	A32930-001	Chute Gasket
6.	A32050-001	Drip Pan
7.	A32962-001	Insulation Collar Bottom
8.	A32962-002	Insulation Collar Bottom
9	A35419-020	Strap kit
10.	13-0079-03	Hose 9" Order By Ft.
11.	16-0162-00	Strainer
12.	A33203-001	Preformed Hose
13.	02-2814-08	Hose Clamp
14.	16-0670-01	Tee
15.	13-0674-06	Tube, 11" Order By Ft.

ITEM NUMBER	PART NUMBER	DESCRIPTION
16.	13-0840-01	Plug
17.	13-0674-06	Tube, 9" Order By Ft.
18.	16-0670-02	Tee
19.	13-0079-03	Tube, 18" Order By Ft.
20.	13-0079-03	Tube, 12" Order By Ft.
21.	A32282-004	Drain
22.	A33101-022	Thermo Probe
23.	02-3266-20	Float & Reservoir complete
23a	02-3266-21	Seat/plunger
23b	02-3266-22	Float valve
24.	03-1394-01	Pal Nut
25.	13-0704-00	Drip pan gasket
26	.A35956-001	Reservoir bracket

NME1250R SERVICE PARTS
REMOTE CONDENSER

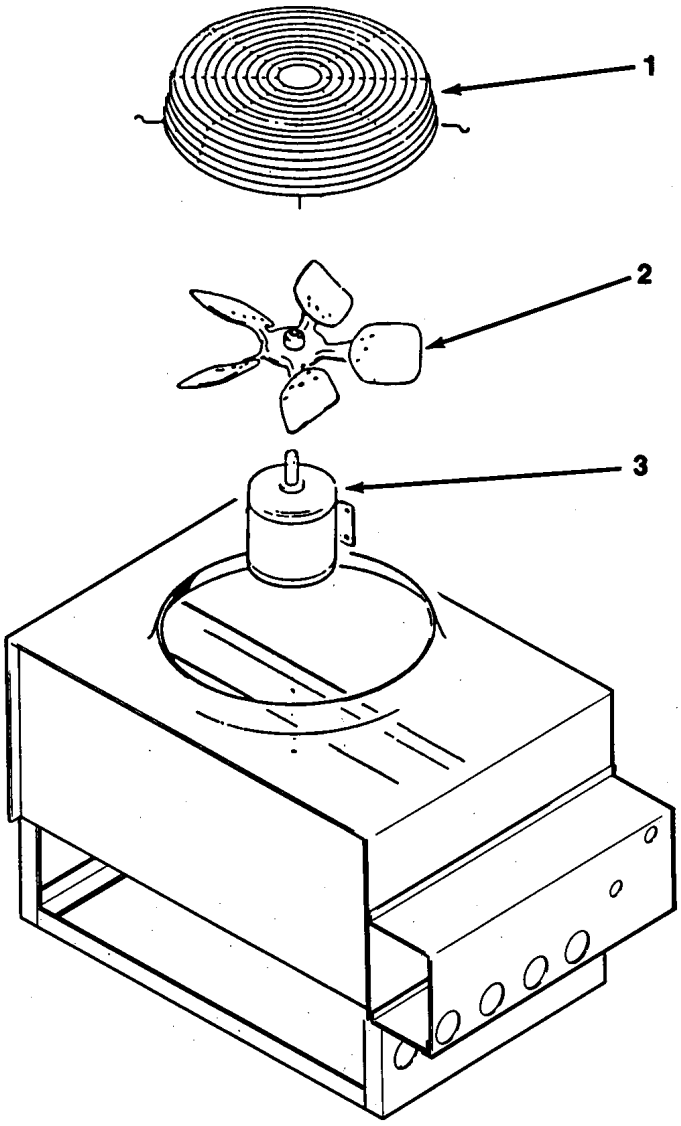

RCE651-32A or RCE652-32A

ITEM NUMBER	PART NUMBER	DESCRIPTION
1.	02-2618-01	Fan Guard
2	18-6304-01	Fan Blade
3.	18-5301-01	Fan Motor
For precharged line set:		
	16-0701-02	Female coupling (3/8")
	16-0701-10	Female coupling (1/2")

ERC201 or ERC402

ITEM NUMBER	PART NUMBER	DESCRIPTION
1	02-3575-01	Fan guard
2	18-8800-01	Fan blade
3	18-8796-32	Fan motor

NME1250R SERVICE PARTS
Component Layout Diagram

208-230/60/1

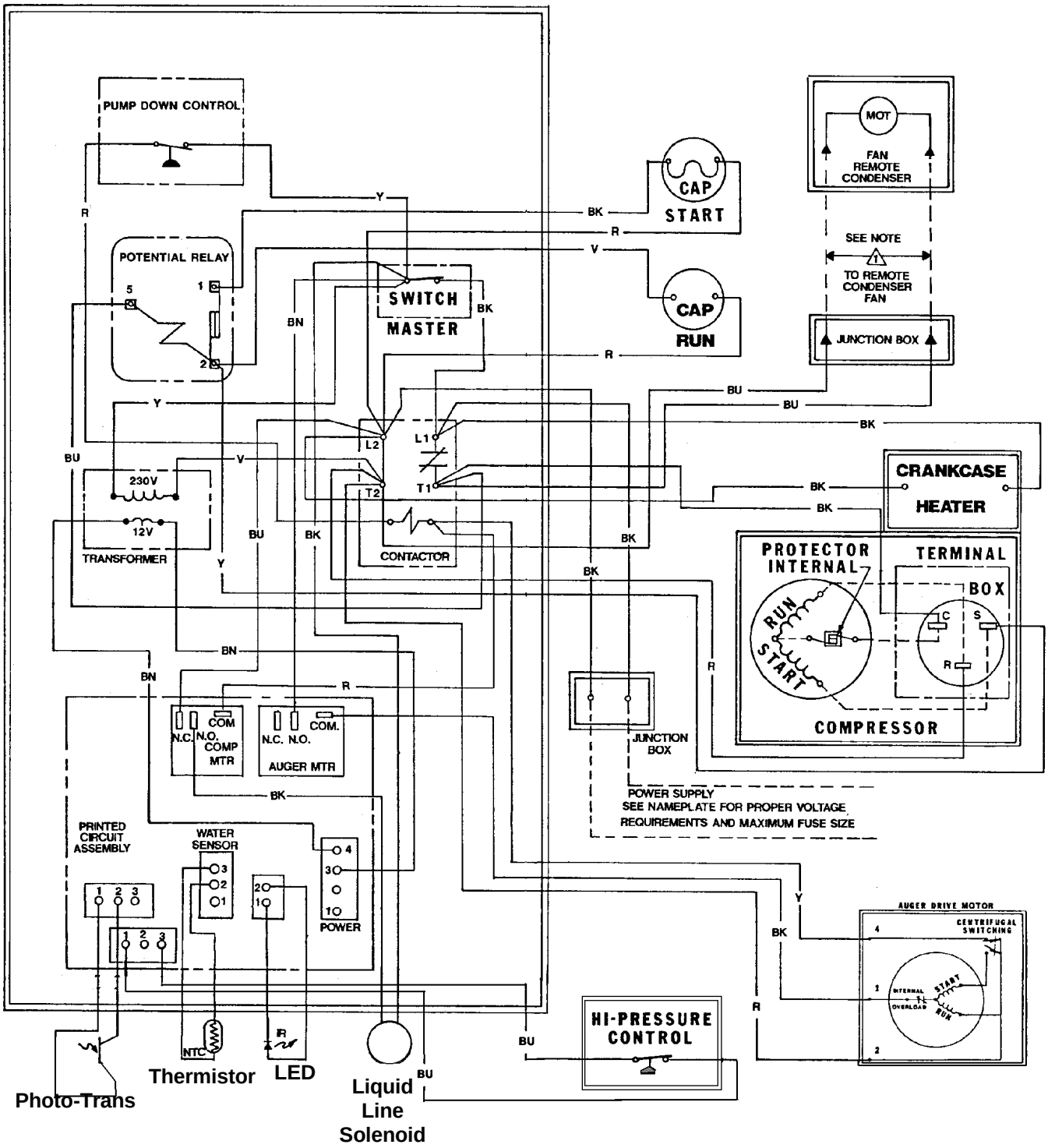

NME1250R SERVICE PARTS
Schematic Diagram

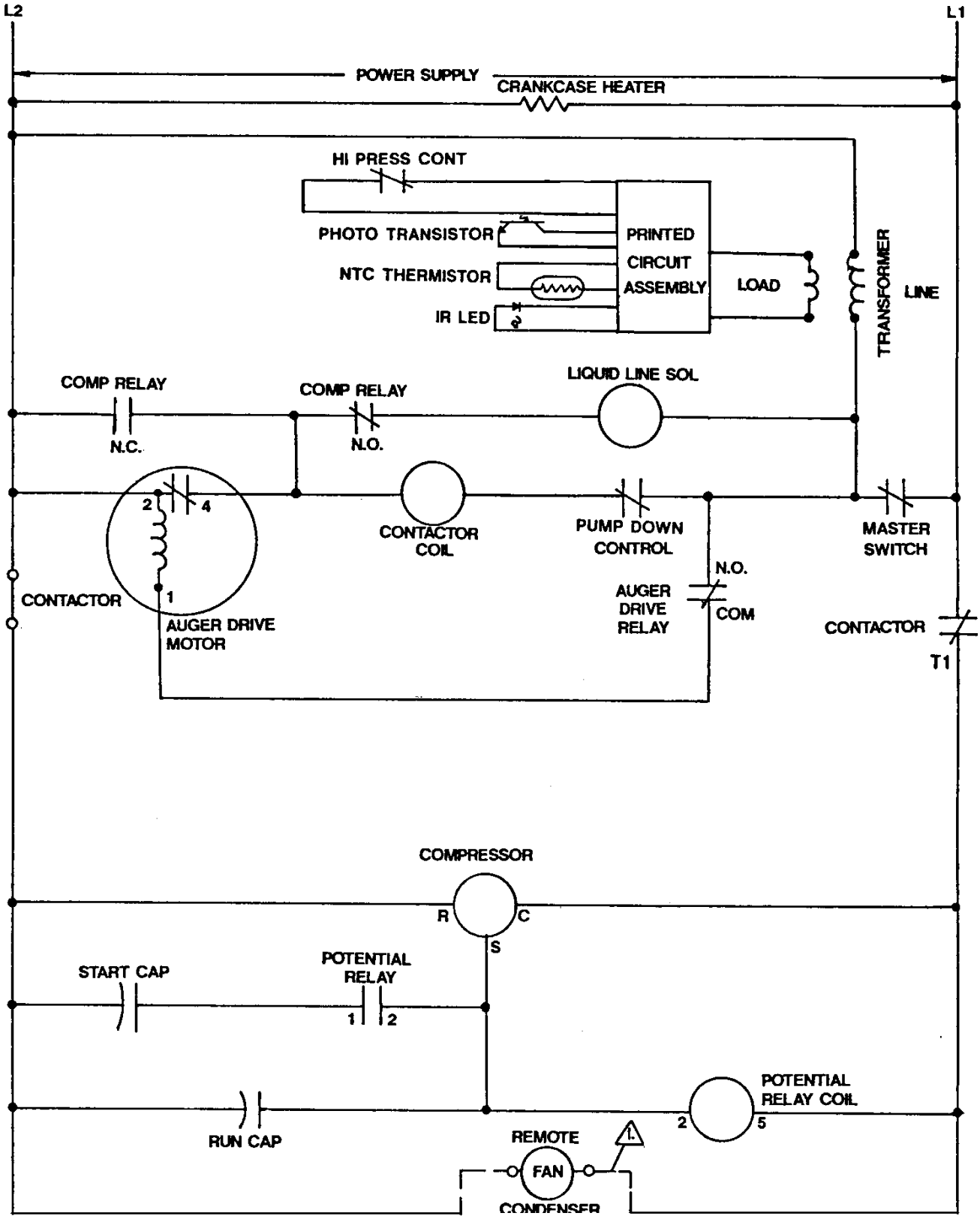

USE COPPER CONDUCTORS ONLY THIS UNIT MUST BE GROUNDED

All Controls Shown in Normal Ice Making Mode

Note: Dashed lines indciate field wiring which must be installed in accordance with the National Electric Code Using a Minimum of 14 ga. awg. wire.