NM1250R SERVICE PARTS

This section contains the parts illustrations and parts lists for the NM1250R.
When ordering parts of assemblies, to avoid costly delays and errors in shipment, give the part number, the complete description as shown in the list and the quantity of each part or assembly.

Table of Contents

Panels page2
Refrigeration page3
Evaporator ..... page 4
Control Box ..... page 5
Gearmotor ..... page 6
Reservoir and drains ..... page 7
Remote condenser ..... page 8

Wiring diagrams ..... page 9

NM1250R SERVICE PARTS

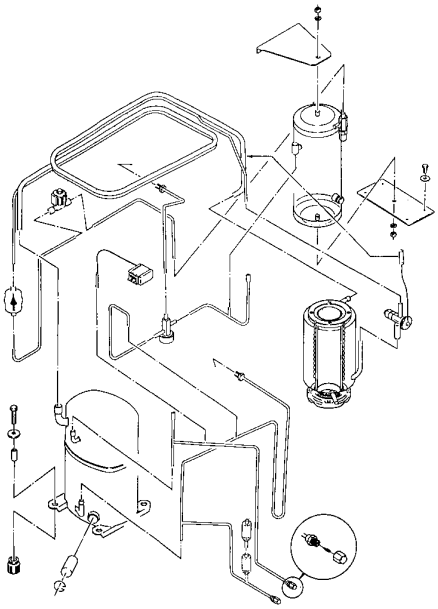

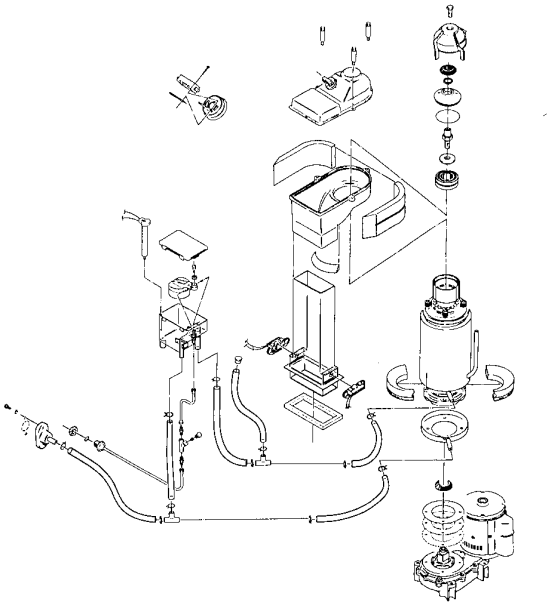

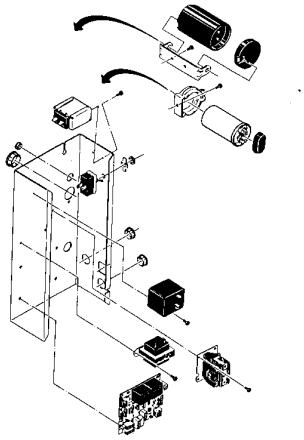

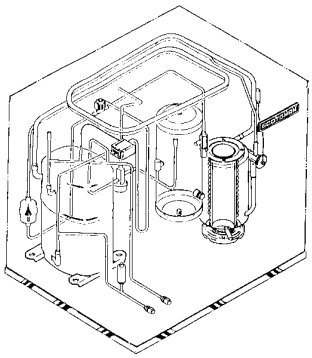

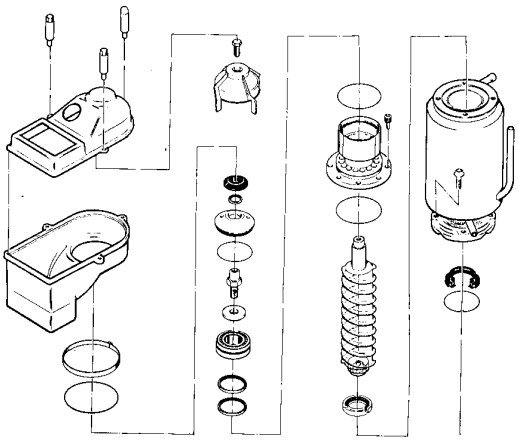

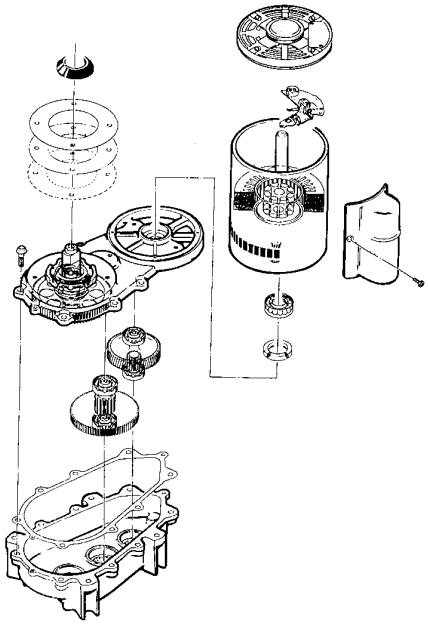

NM1250R SERVICE PARTS
PANELS

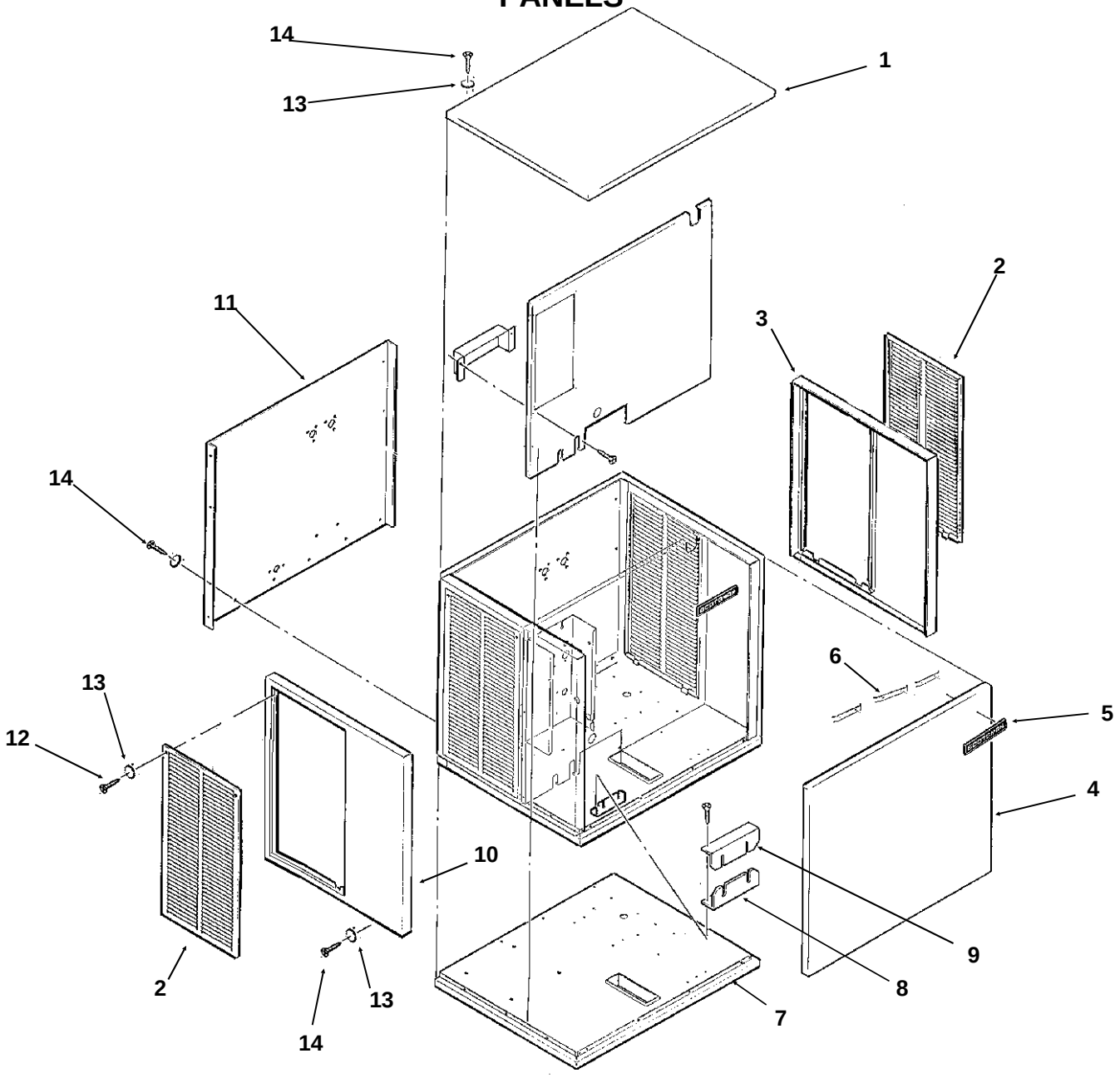

ITEM NUMBER	PART NUMBER	DESCRIPTION
1.	A32159-001	Top Panel Painted
	A32159-002	Top Panel Stainless
2.	A32161-001	Service Panel Paint
	A32161-002	Service Panel S.S.
3.	A32162-001	Right End Panel Pt.
	A32162-002	Right End Panel S.S.
4.	A32160-001	Front Panel Painted
	A32160-002	Front Panel S.S.
5.	15-0711-01	Emblem
6.	03-0271-00	Clip For Emblem (3)

ITEM NUMBER	PART NUMBER	DESCRIPTION
7.	A32542-001	Base Assembly
8.	A31462-001	Tube Bracket
9.	A31461-001	Tube Bracket
10.	A32163-001	Left End Panel Pt.
	A32163-002	Left End Panel S.S.
11.	A32201-001	Back Panel
12.	03-1404-12	Screw
13.	03-1417-03	Washer
14.	03-1531-01	Screw

NM1250R SERVICE PARTS
REFRIGERATION

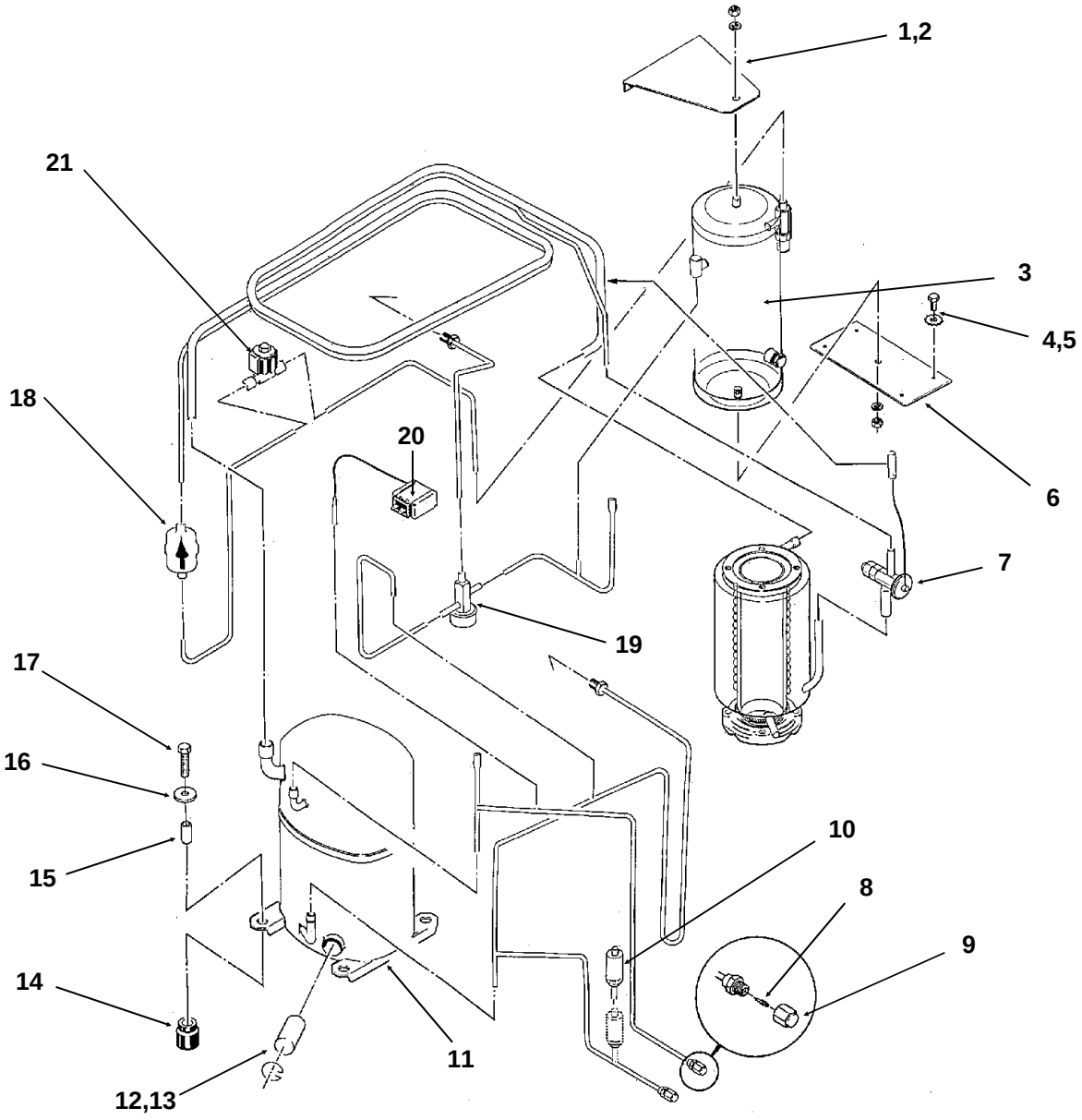

ITEM NUMBER	PART NUMBER	DESCRIPTION
1.	03-1406-13	Nut
2.	03-1410-06	Washer
3.	16-0761-01	Receiver
4.	03-1645-01	Screw
5.	03-1417-09	Washer
6.	A31801-002	Bracket
7.	16-0780-21	Thermo. Exp. Valve
8.	16-0560-00	Valve Core
9.	16-0563-00	Valve Cap
10.	11-0446-21	High Press. Switch
11.	18-5900-04	Compressor 208-230/60/1 (includes item 12)

ITEM NUMBER	PART NUMBER	DESCRIPTION
11.	18-5900-03	Compressor 208-230/60/3 (includes item 12)
12.	12-2308-01	Heater
13.	12-2309-01	clip
14.	18-6800-01	Grommet
15.	18-2300-26	Sleeve
16.	03-1407-07	Washer
17.	03-1405-20	Bolt
18.	02-3319-02	Drier
19.	11-0422-22	Lo Temp Valve
20.	11-0420-23	Pump Down Switch
21.	12-2257-01	Liquid Line Valve

NM1250R SERVICE PARTS
EVAPORATOR

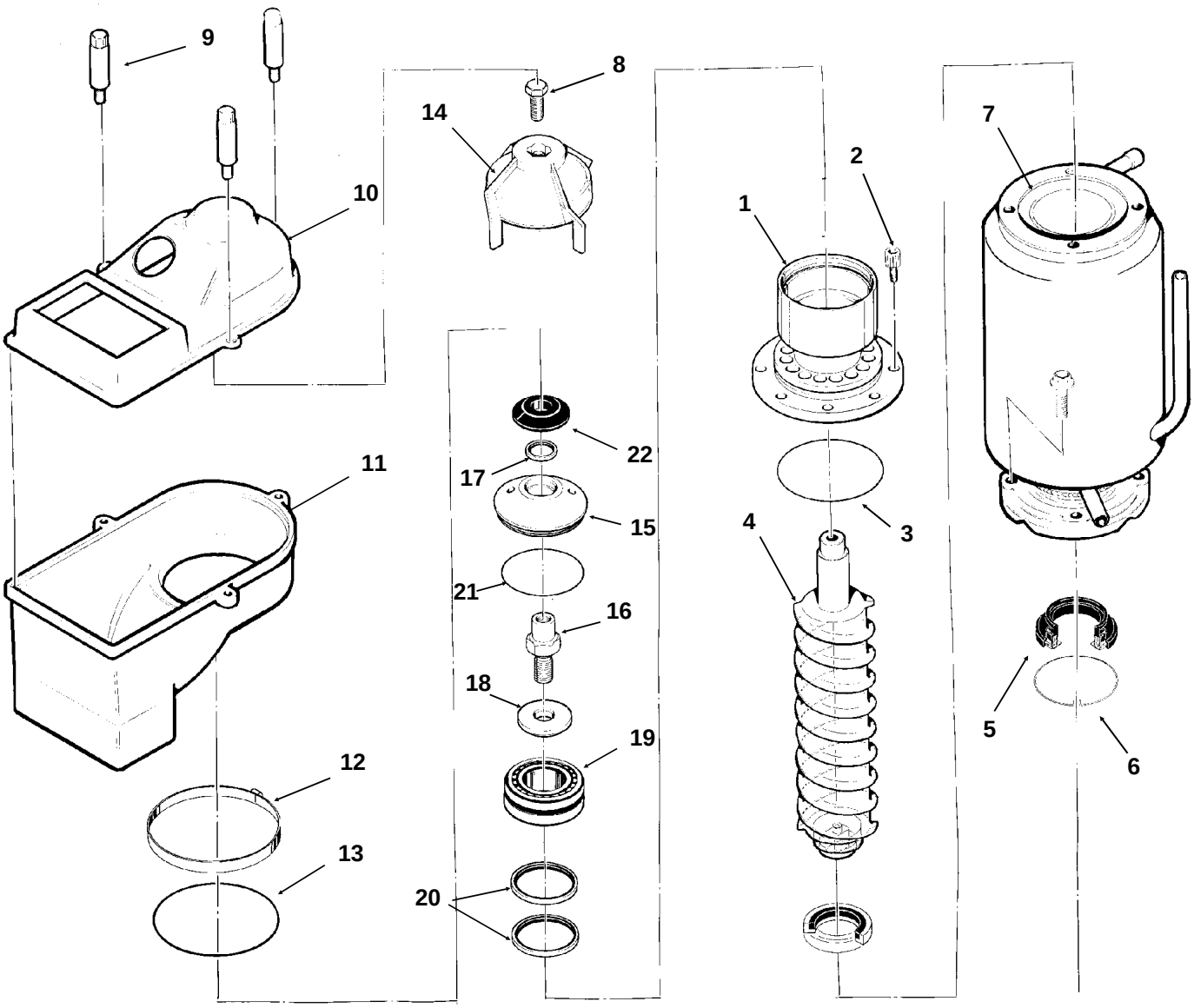

ITEM NUMBER	PART NUMBER	DESCRIPTION
1.	A32900-020	Breaker
2.	03-1544-08	Soc. head Screw
3.	13-0617-45	O-ring
4.	A38071-022	Auger
5.	02-0929-23	Water Seal
6.	A32777-001	Ring, Water Seal
7.	A32890-020	Evaporator
8.	03-1405-52	Hex Cap Screw
9.	02-2933-01	Hex stud
	A34969-001	Bail clamp, use began Jan. 91

Note: Evaporator is not available with internal parts. The auger and water seal must be ordered seperately.

ITEM NUMBER	PART NUMBER	DESCRIPTION
10.	02-2930-01	Ice Chute Cover
11.	02-2926-01	Ice Chute Body
12.	A32905-001	Clamp
13.	13-0617-52	O-ring
14.	02-3001-01	Ice Sweep
15.	02-3128-20	Breaker Cover
16.	08-0660-01	Auger Stud
17.	02-2978-01	Lip Seal
18.	part of item 16	Thrust Washer
19.	A34559-020	Bearing
20.	02-2977-01	Lip Seal
21.	13-0617-54	O-Ring
22.	13-0871-01	Water Shed

NM1250R SERVICE PARTS
CONTROL BOX

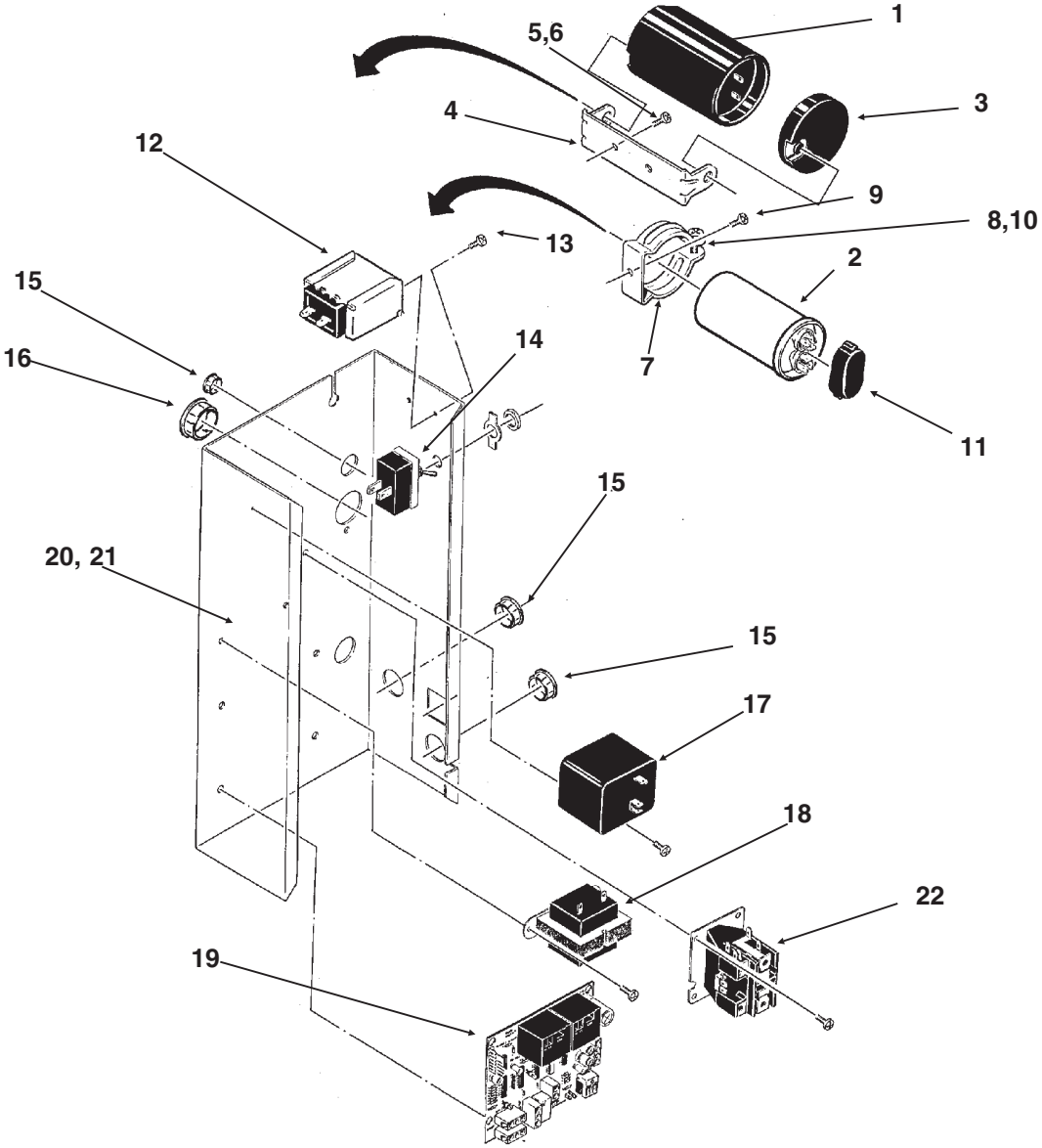

ITEM NUMBER	PART NUMBER	DESCRIPTION
1.	18-1901-48	Start Capacitor
2.	18-1902-53	Run Capacitor
3.	18-4300-50	Start Capacitor Cap
4.	18-2200-39	Start Cap. Bracket
5.	03-1638-04	Screw
6.	03-1417-15	Lockwasher
7.	A32872-001	Run Cap. Bracket
8.	03-1652-02	Bolt
9.	03-1638-03	Screw
10.	03-0255-04	Wing Nut
11.	13-0666-00	Terminal Cover
12.	11-0420-23	Pump Down Control
13.	03-1403-02	Screw
14.	12-0426-01	Master Switch

ITEM NUMBER	PART NUMBER	DESCRIPTION
15.	12-1213-10	Snap Bushing
16.	12-1213-11	Snap Bushing
17.	18-1903-46	Relay
18.	12-2285-22	Transformer
19.	A37750-021	Circuit Board
20.	No Number	Control Box
21.	A32896-001	Cont. Box Cover
22.	12-2469-02	1 Phase Contactor
	12-0739-02	3 Phase Contactor
NOT ILLUSTRATED		
23.	12-2337-02	3 pin plug assy (safety circuit to circuit board)
24.	12-2340-01	4 pin plug assy (transformer to circuit board)

NM1250R SERVICE PARTS
GEARMOTOR

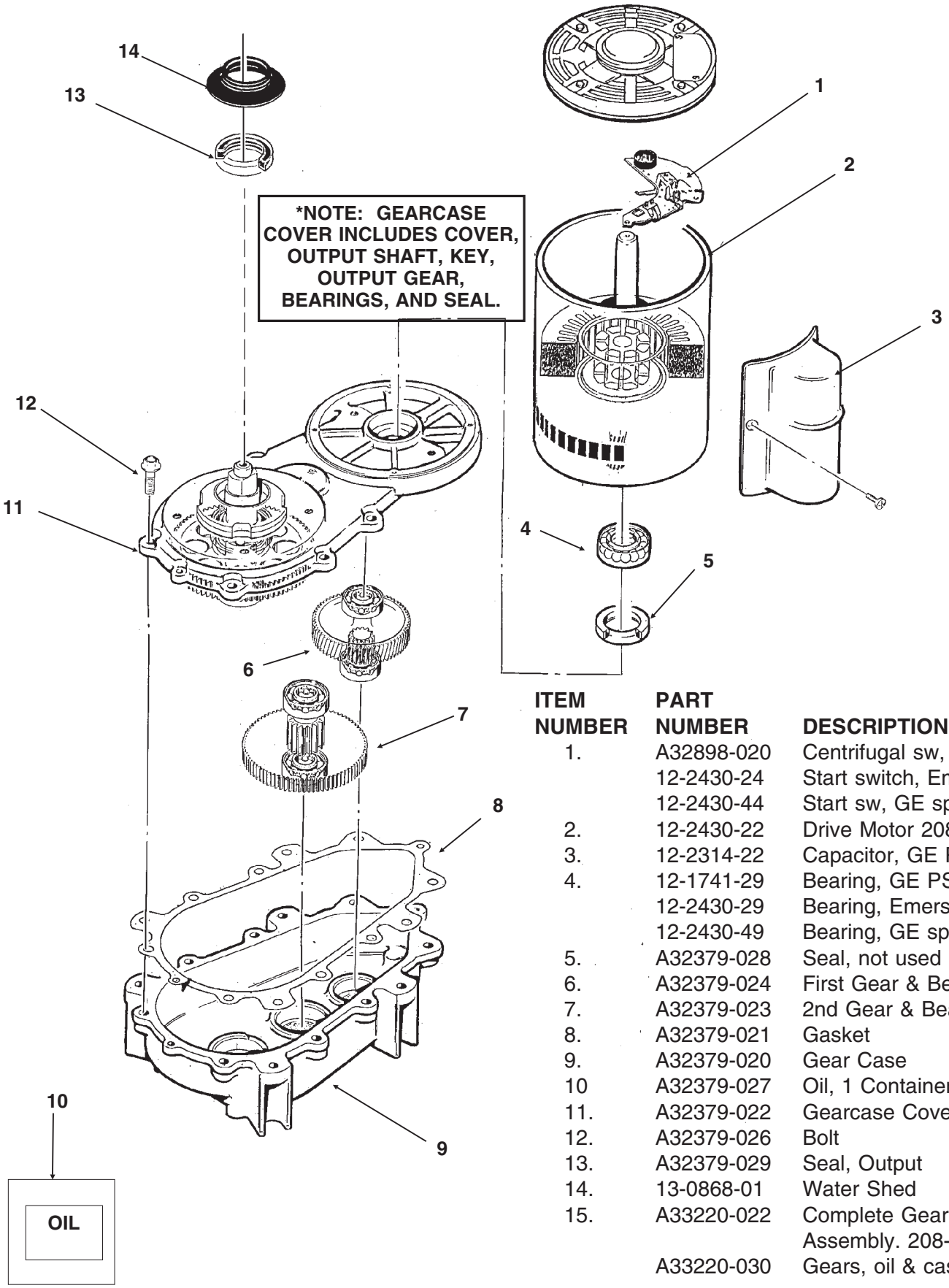

ITEM NUMBER	PART NUMBER	DESCRIPTION
1.	A32898-020	Centrifugal sw, GE PSC
	12-2430-24	Start switch, Emerson
	12-2430-44	Start sw, GE split phase
2.	12-2430-22	Drive Motor 208-230 Volt
3.	12-2314-22	Capacitor, GE PSC only
4.	12-1741-29	Bearing, GE PSC
	12-2430-29	Bearing, Emerson
	12-2430-49	Bearing, GE split phase
5.	A32379-028	Seal, not used after 2/2000
6.	A32379-024	First Gear & Bearing
7.	A32379-023	2nd Gear & Bearing
8.	A32379-021	Gasket
9.	A32379-020	Gear Case
10	A32379-027	Oil, 1 Container
11.	A32379-022	Gearcase Cover*
12.	A32379-026	Bolt
13.	A32379-029	Seal, Output
14.	13-0868-01	Water Shed
15.	A33220-022	Complete Gearmotor Assembly. 208-230 v.
	A33220-030	Gears, oil & cases. No motor

NM1250R SERVICE PARTS
RESERVOIR, DRAINS, ICE CHUTE, ICE LEVEL SENSORS

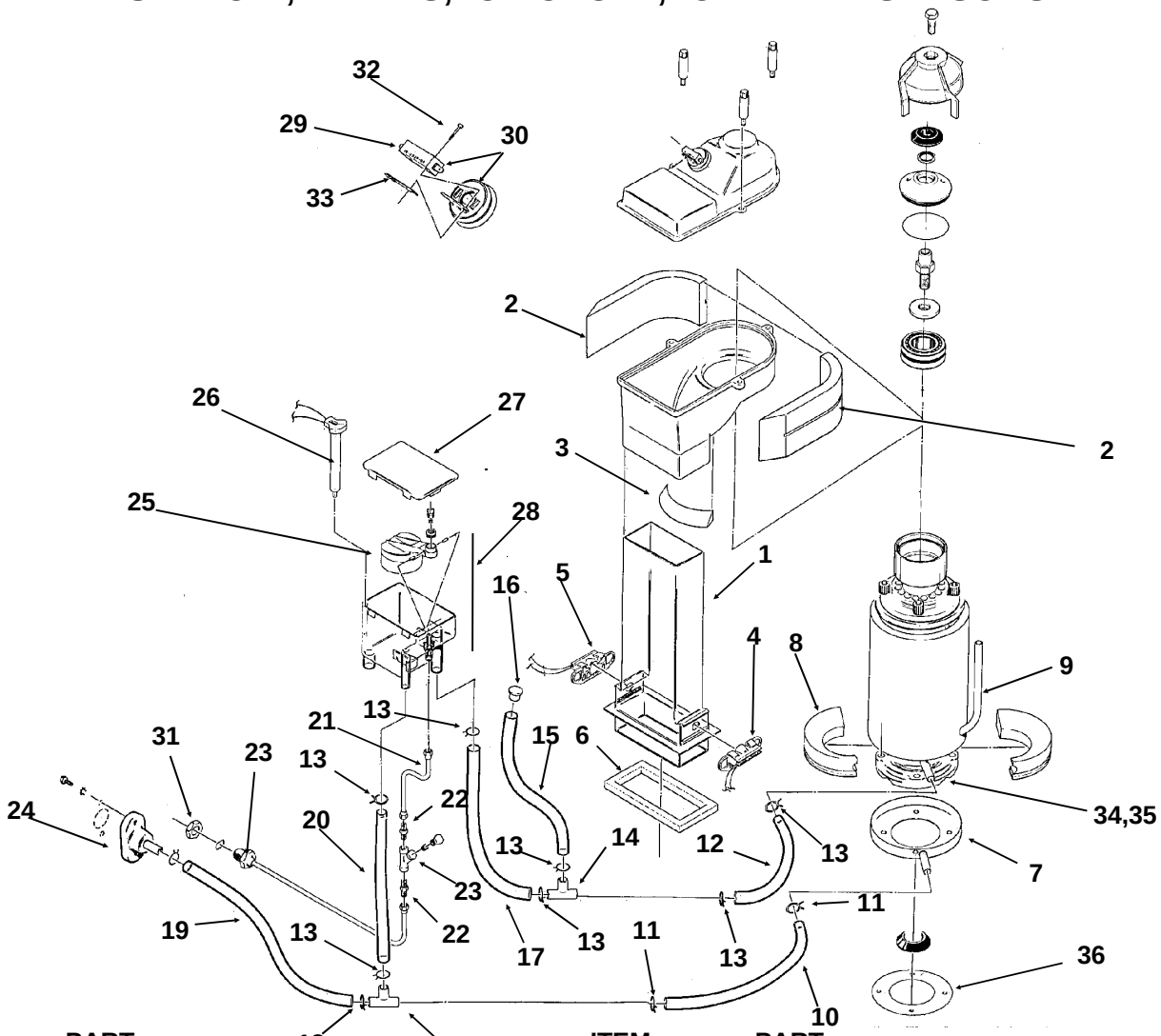

ITEM NUMBER	PART NUMBER	DESCRIPTION
1.	02-2929-01	Ice Chute Lower
2.	A32963-001	Insulation Collar Top
3.	A33102-001	Insulation Collar Inside
	A33210-001	Rubber Band
4.	A37708-021	LED & Phototransistor Assy. (set - includes item 5)
5.	no number	same as item 4
6.	A32930-001	Chute Gasket
7.	A37705-021	Drip Pan
8.	A32962-001	Insulation Collar Bottom
9.	A32962-002	Insulation Collar Bottom
10.	13-0079-03	Hose 3.3" Order By Ft.
11.	02-0538-00	Hose Clamp
12.	A33203-001	Preformed Hose
13.	02-2814-08	Hose Clamp
14.	16-0670-01	Tee
15.	13-0674-06	Tube, 14" Order By Ft.
16.	A33205-001	Plug
17.	13-0674-06	Tube, 9" Order By Ft.
18.	16-0670-02	Tee
19.	13-0079-03	Tube, 18" Order By Ft.

ITEM NUMBER	PART NUMBER	DESCRIPTION
20.	13-0079-03	Tube, 11" Order By Ft.
21.	A32748-001	Tube
22.	16-0791-01	Coupling Union
23.	A32878-001	Inlet Water Tube
24.	A32282-004	Drain
25.	A32922-020	Float Assy With Pin, Housing Seal, Rubber Seal, Insert & Float.
26.	A33101-023	Thermo Probe
27.	02-2936-01	Reservoir Cover
28.	A32929-020	Float And Reservoir Complete
29.	12-2329-01	Switch, auto reset
	12-2398-01	Switch, manual reset
30.	A32891-020	Switch Housing With Switch
31.	03-1394-01	Pal Nut
32.	03-1403-09	Screw
33.	03-0886-00	Speed Nut
34.	03-1405-41	Stud, Evap to GM
35.	03-1417-13	Lock washer
36	13-0704-00	Drip pan gasket

NM1250R SERVICE PARTS
REMOTE CONDENSER

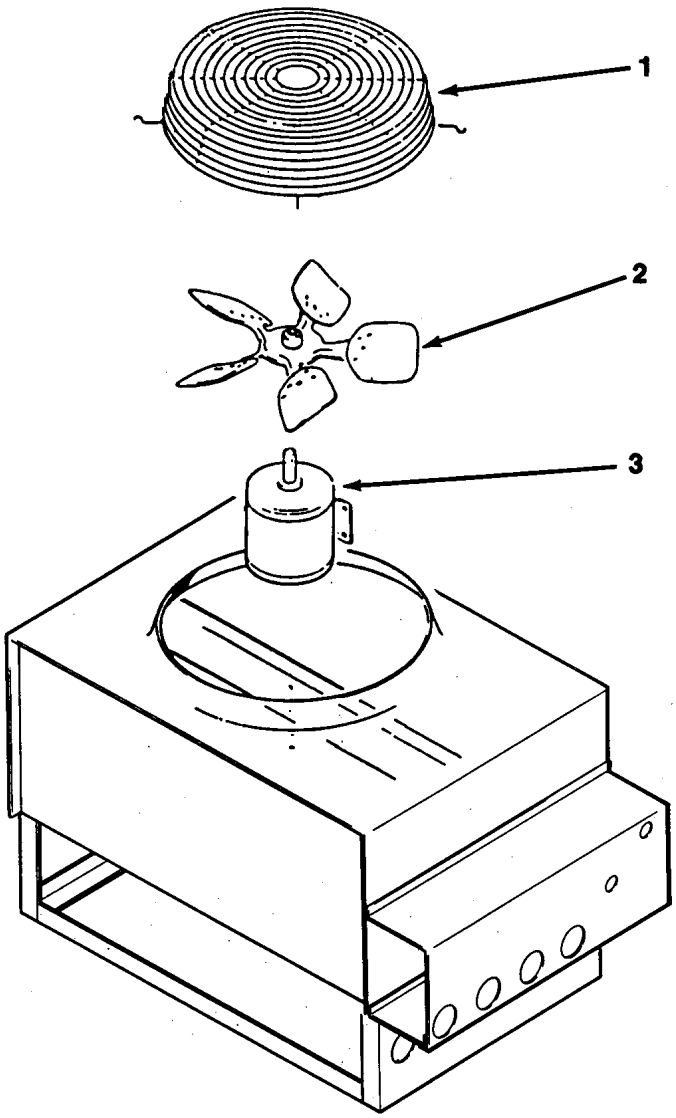

RC1451-32B or
RC1051-32A or RC1052-32A

ITEM NUMBER	PART NUMBER	DESCRIPTION
1.	02-2618-01	Fan Guard
2	18-6304-01	Fan Blade
3.	18-5301-01	Fan Motor

RC651-32B or RC652-32B

ITEM NUMBER	PART NUMBER	DESCRIPTION
1.	02-2618-01	Fan Guard
2	18-3733-01	Fan Blade
3.	18-5301-01	Fan Motor

NM1250R SERVICE PARTS

Component Layout Diagram

208-230/60/1

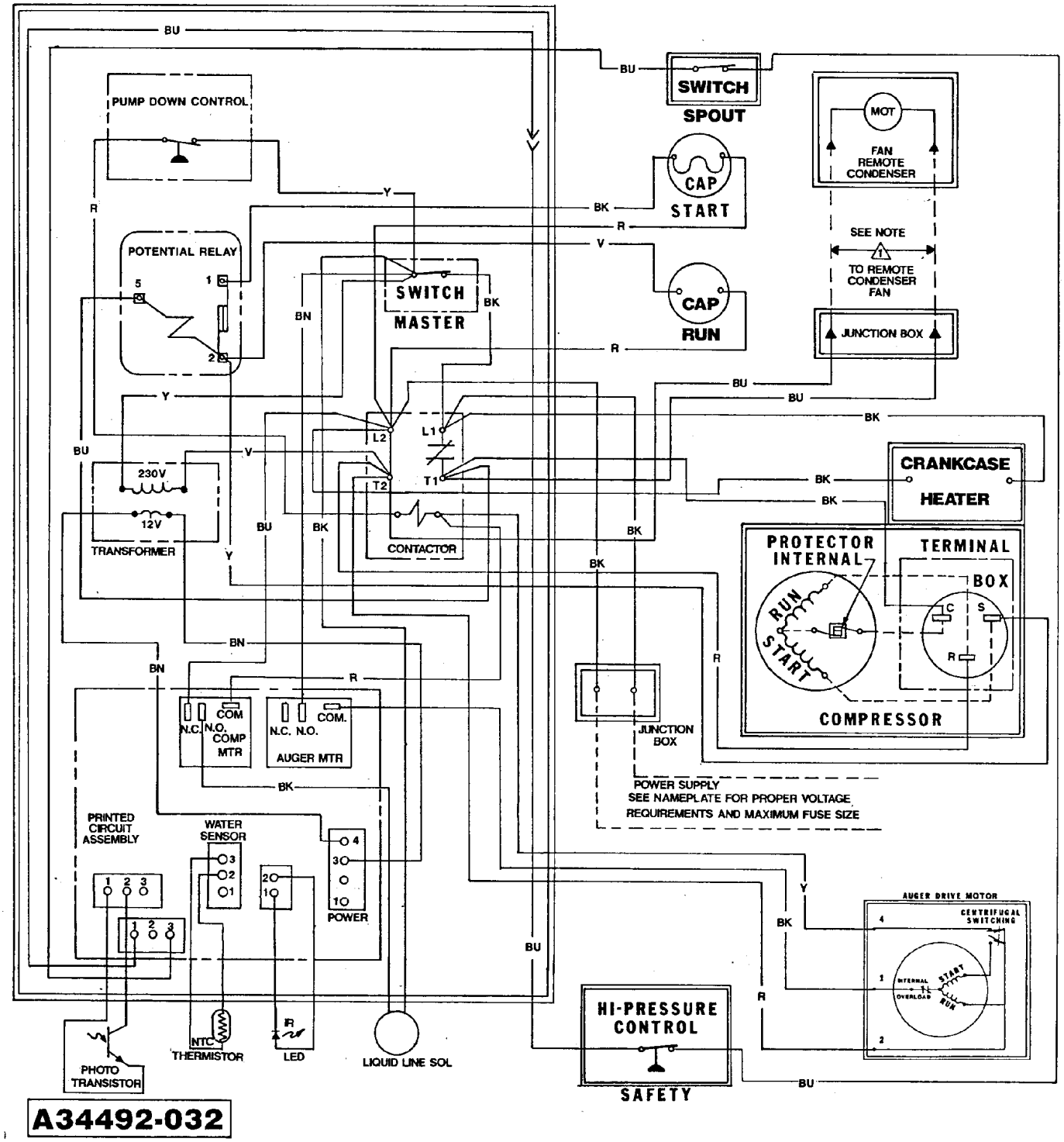

NM1250R SERVICE PARTS

Schematic Diagram

208-230/60/1

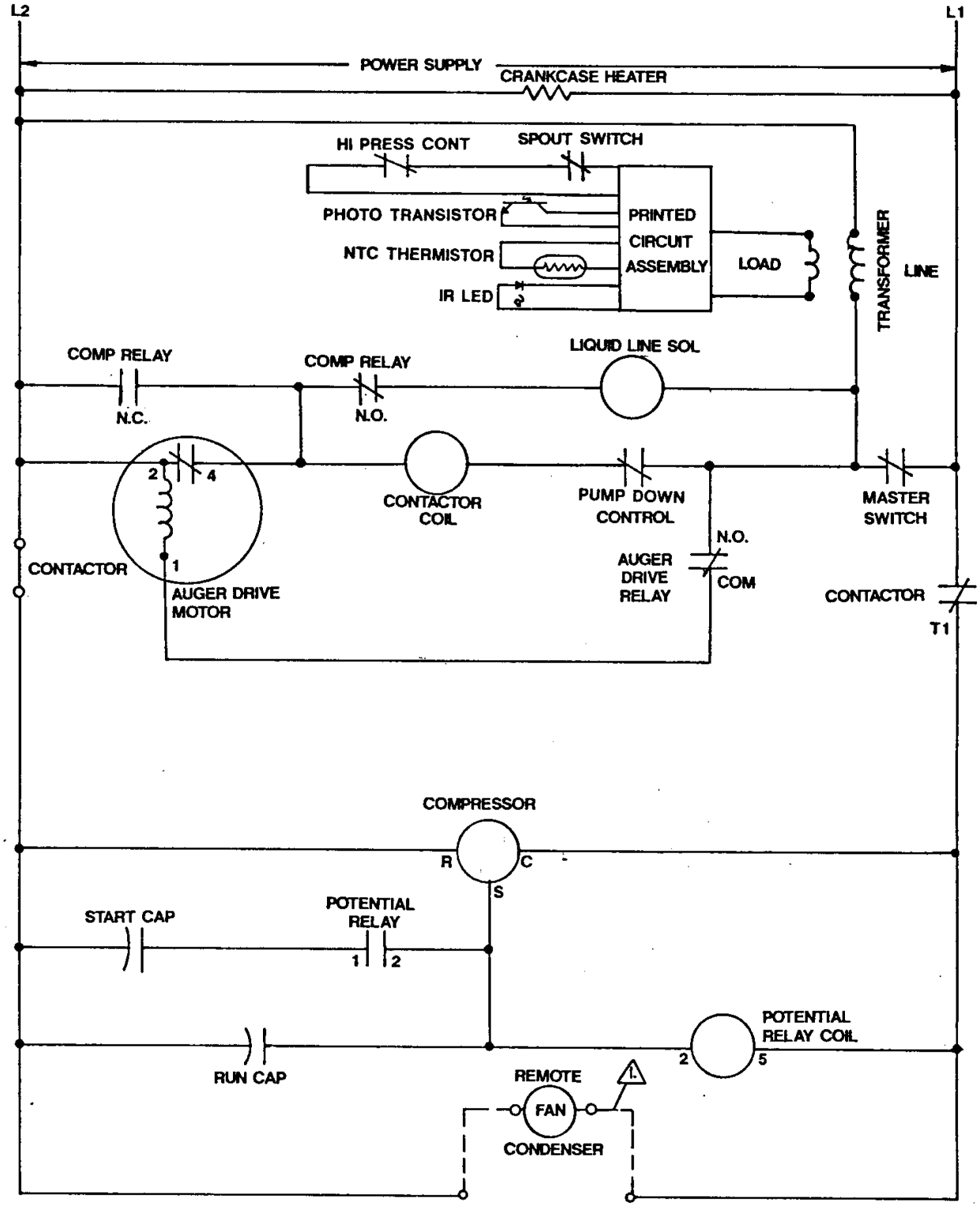

USE COPPER CONDUCTORS ONLY THIS UNIT MUST BE GROUNDED

All Controls Shown in Normal Ice Making Mode.

Note: Dashed lines indicate field wiring which must be installed in accordance with the National Electric Code Using a Minimum of 14 ga. awg. wire.

NM1250R SERVICE PARTS

Component Layout Diagram

208-230/60/3

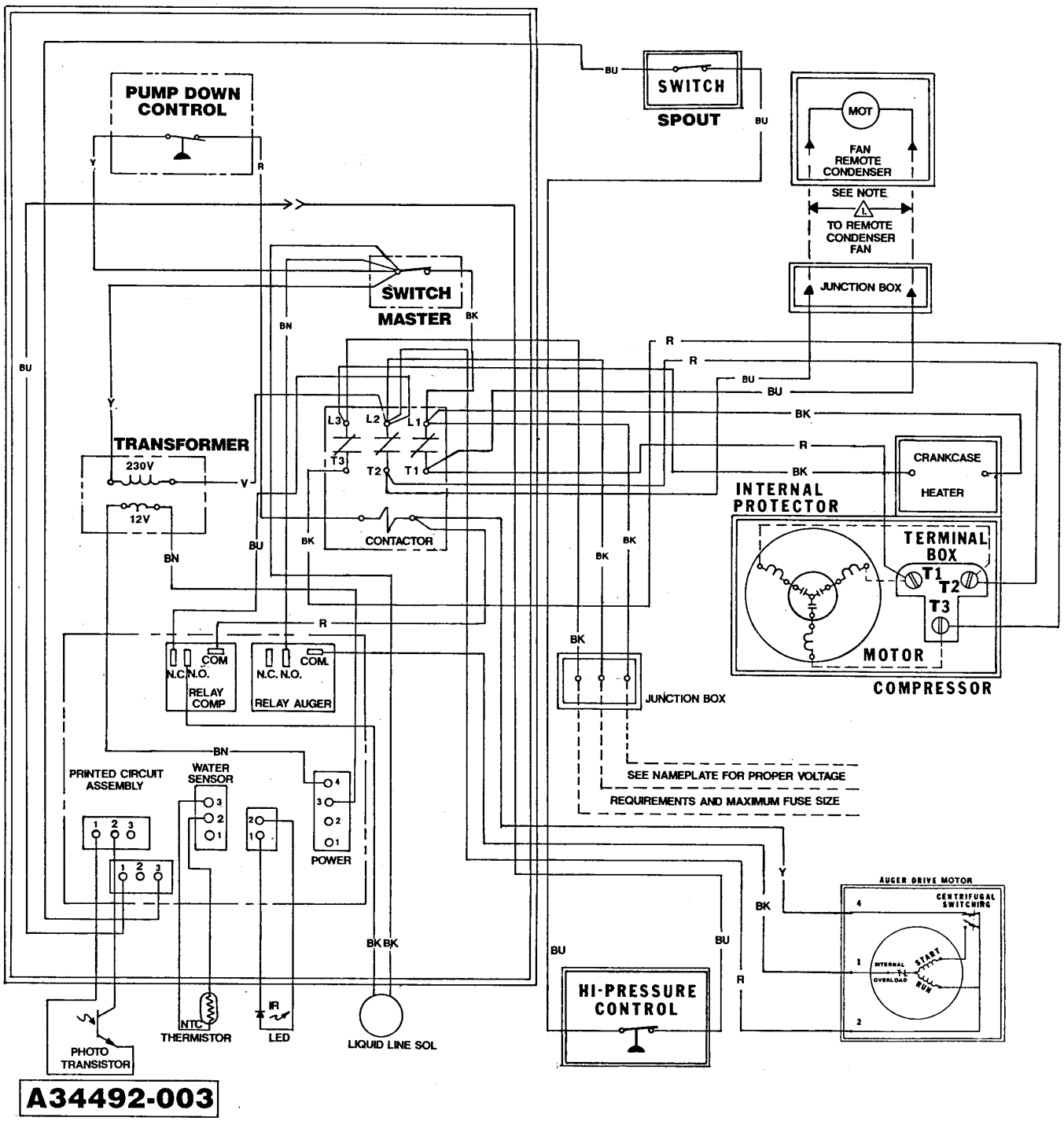

NM1250R SERVICE PARTS

Schematic Diagram
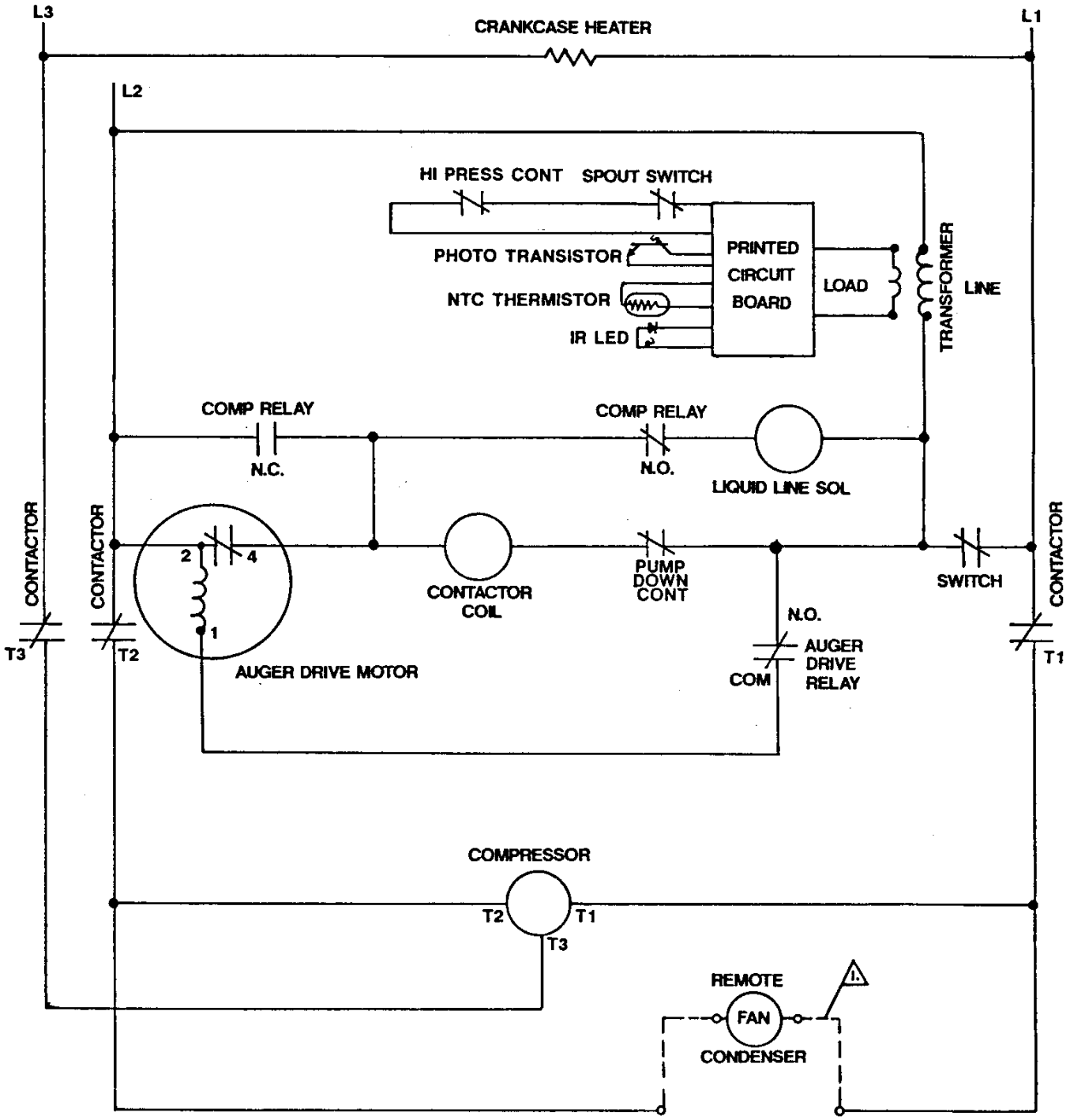
208-230/60/3