INTRODUCTION

To the owner or user: The service manual you are reading is intended to provide you, and the maintenance or service technician, with the information needed to install, start up, clean, maintain, and service this ice system.

The NM1250R is a remote condenser modular ice system that produces up to 1400 lbs. of nugget ice in 24 hours at 90^0 F. air and 70^0 F. water.

It features: front service for the freezer, gearmotor, control box, water reservoir, and bin control; stackable with kit KSTACK30; an electronic circuit for monitoring ice and water level; a thermostatic expansion valve; and R-502 as the refrigerant.

TABLE OF CONTENTS

For the Installer
- Specifications 2
- Location 5
- Remote Condenser 6

For the Plumber 9

For the Electrician 10

Final Check List 14

Start Up 15

Component Description 16

Operation 18

Maintenance & Cleaning 23

Service Diagnosis 26

Removal and Replacement
- Water Reservoir & Bin Controls 31
- Bearing & Breaker 32
- Auger 33
- Watert Seal 34
- Evaporator 35
- Gearmotor 36

Circuit Board Testing 38

Parts Lists and Wiring Diagrams are located in the center of this manual, printed on yellow paper.

NM1250R
FOR THE INSTALLER

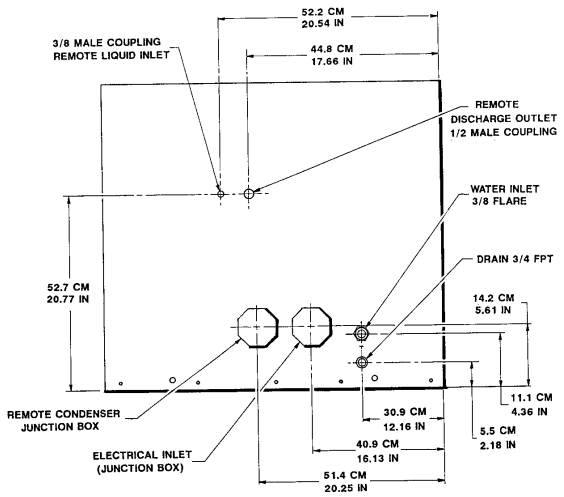

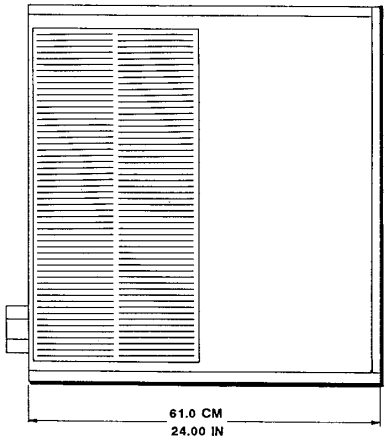

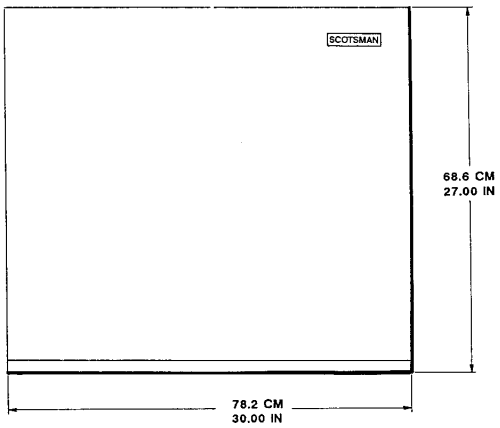

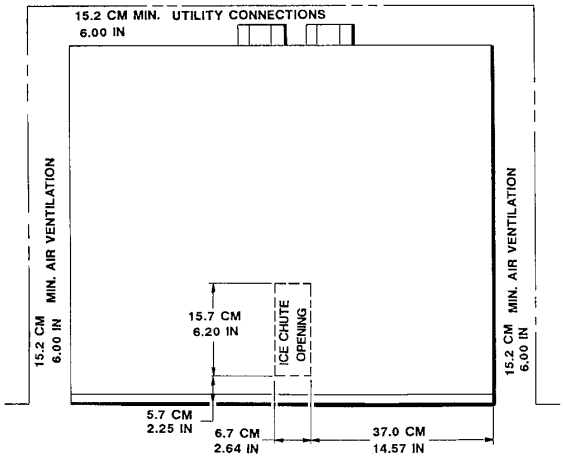

The NM1250R is designed to fit the following Scotsman storage bins:

B590 and extensions (with bin top KBT18)

HTB500 or BH500

BH800 using bin top KBT15

BH1000 using bin top KBT16

When installing a new system, check to be sure that you have everything you need before beginning:

Correct Condenser

Correct Bin

Correct Ice Machine

Correct Bin Top (if required)

Correct Precharged line set

Fan Relay kit (if needed)

All kits, legs, and information required for the specific job.

SPECIFICATIONS: ICEMAKER

MODEL	DIMENSIONS (without bin) H" x W" x D"	COND. TYPE	COMP. H.P.	ICE TYPE	BASIC ELECTRICAL	MINIMUM CIRCUIT AMPACITY+	MAXIMUM FUSE SIZE
NM1250RE-32A	27 x 30 x 24	REM0TE-AIR	1.75	NUGGET	208-230/60/1	9.5	20
NM1250RE-3A	same		same	same	208-230/60/3	na	na

+ Minimum Circuit Ampacity is used to determine wire size per National Electric Code.

The standard finish is enamel sandalwood. A stainless steel panel kit, SPKCMD-1, may be field installed to convert the unit to a stainless steel finish.

FOR THE INSTALLER

Typical Storage Bin: BH800
Back View

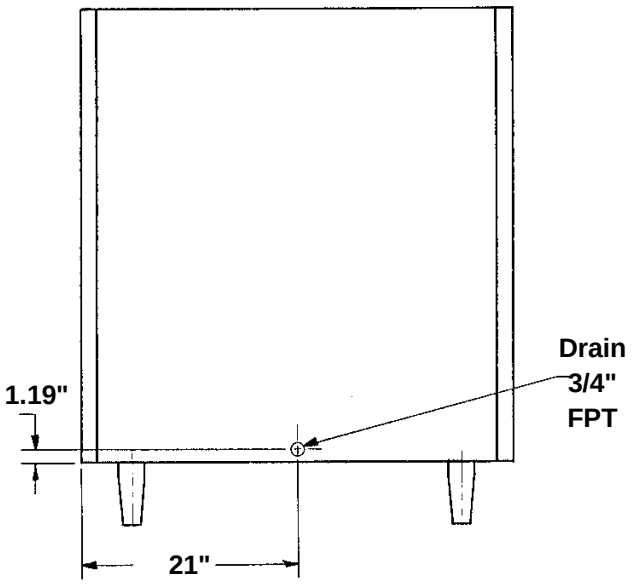

Side View

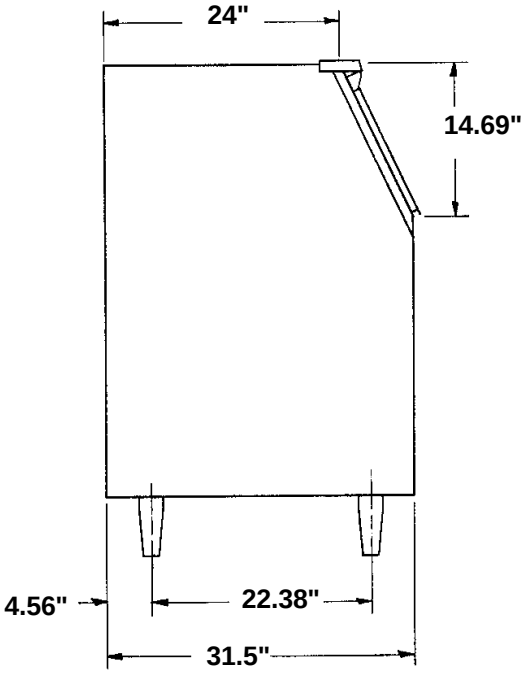

Front View

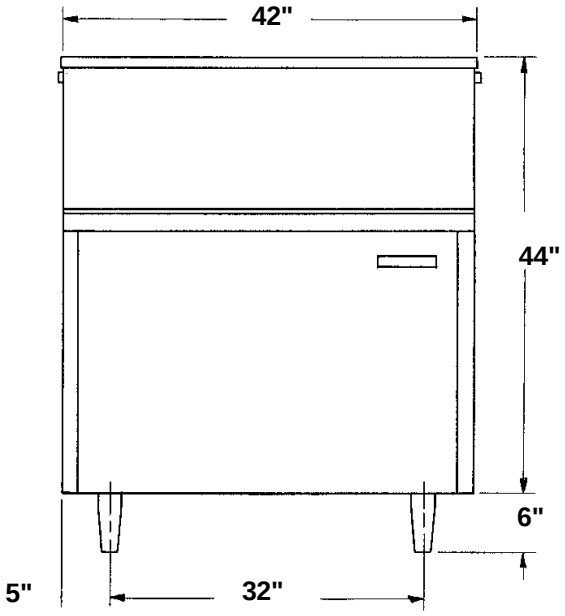

Installation Limitations:

This ice system is designed to be installed indoors, in a controlled environment:

	Min	Max
Air Temperature	50^0F	100^0F
Water Temperature	40^0F	100^0F
Water Pressure	20 psi	80 psi
Voltage	5%	+10%

(Compared to the nameplate)

The temperature limitations do not apply to the remote condenser. It will work between -20 degrees F, and 120 degrees F.

Operating the machine outside of the limitations is misuse and can void the warranty.

Scotsman Ice Systems are designed and manufactured with the highest regard for safety and performance. They meet or exceed the standards of UL, NSF, and CSA.

Scotsman assumes no liability or responsibility of any kind for products manufactured by Scotsman that have been altered in any way, including the use of any part and/or other components not specifically approved by Scotsman.

Scotsman reserves the right to make design changes and/or improvements at any time. Specifications and design are subject to change without notice.

NM1250R

FOR THE INSTALLER: Remote Condenser

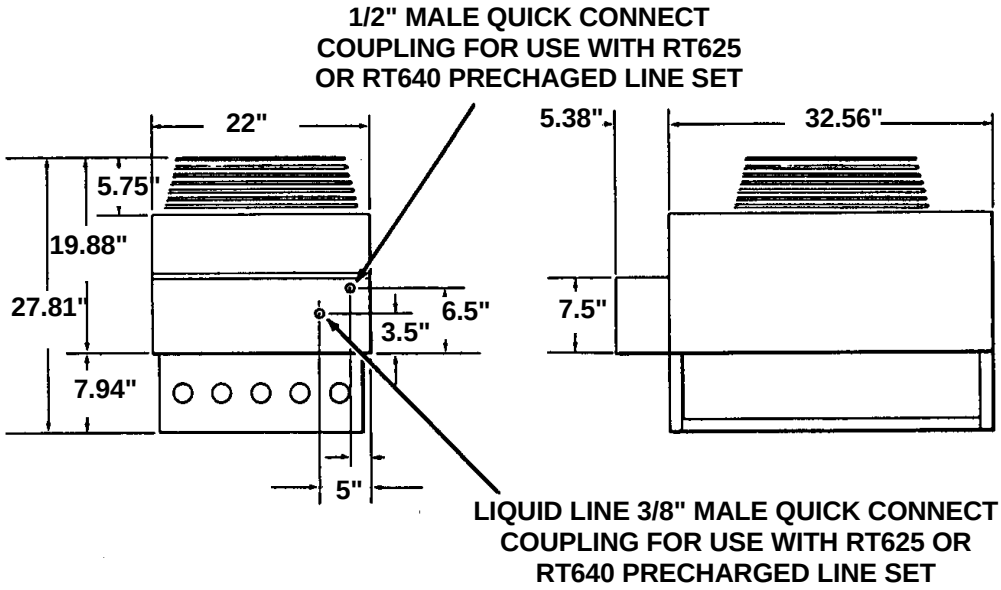

SPECIFICATIONS: REMOTE CONDENSER

MODEL	DIMENSIONS H" x W" x D"	USE WITH	BASIC ELECTRICAL	MINIMUM CIRC. AMPACITY+	SHIPPING WEIGHT
RC1051-32A RC1052-32A	27.81" x 22" x 37.94" same	1 NM1250R 1 or 2 NM1250Rs	208-230/60/1 same	2 same	84 lbs. same

+ Included with minimum circuit ampacity for the icemaker. Use this valve to determine wire size and type between ice maker and fan motor.

RT625 Precharged line set, 25'. R502.

RT640 Precharged line set, 40'. R502.

KCMR230 Fan relay kit used when two icemakers are on one two circuit condenser.

NAME PLATE

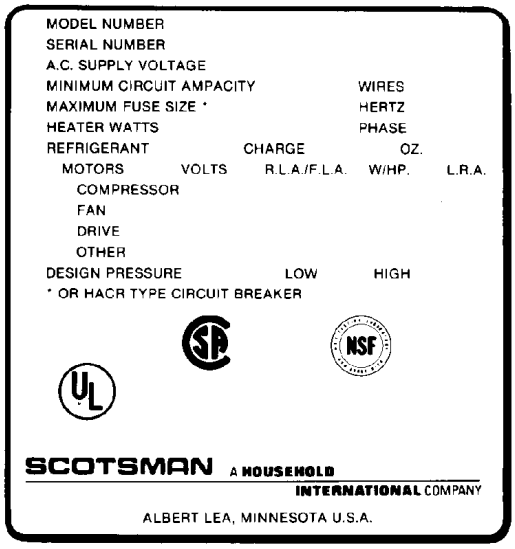

ICEMAKER NAMEPLATE
LOCATED ON BACK PANEL

SERIAL PLATE LOCATED
BEHIND FRONT PANEL

FOR THE INSTALLER

Location:

After uncrating and inspection, the unit is ready for installation. It is important that the machine be installed in a location where it has enough space around it to be accessible for service, usually a minimum of 6 inches. Try to avoid hot, dirty and crowded locations. Be sure that the location for the machine is within the limitations described on page 3.

Storage Bin:

Tip the storage bin on its back, using parts of the carton to protect the exterior finish. Install the legs into the threaded holes in the bottom of the bin. Turn the leg levelers all the way in preparation for leveling later. Return the bin to the upright position, remove paper covering the bin gasket.

Install bin top if required, follow the directions included with the bin top.

Note: Do not push bin into position, but lift it there. Pushing a bin, especially one with ice in it, can cause damage to the legs and the leg mounts.

Ice Maker:

The machine is heavy, so the use of a mechanical lift is recommended for lifting the machine high enough to install on top of the bin. After the unit is placed on the bin, line it up so it is even with the back, left, and right sides. Secure the machine to the bin with the hardware provided with the machine.

Remove the front panel and remove the styrofoam shipping blocks from under the gearmotor, the top of the ice chute, and from between the gearmotor and the right side panel.

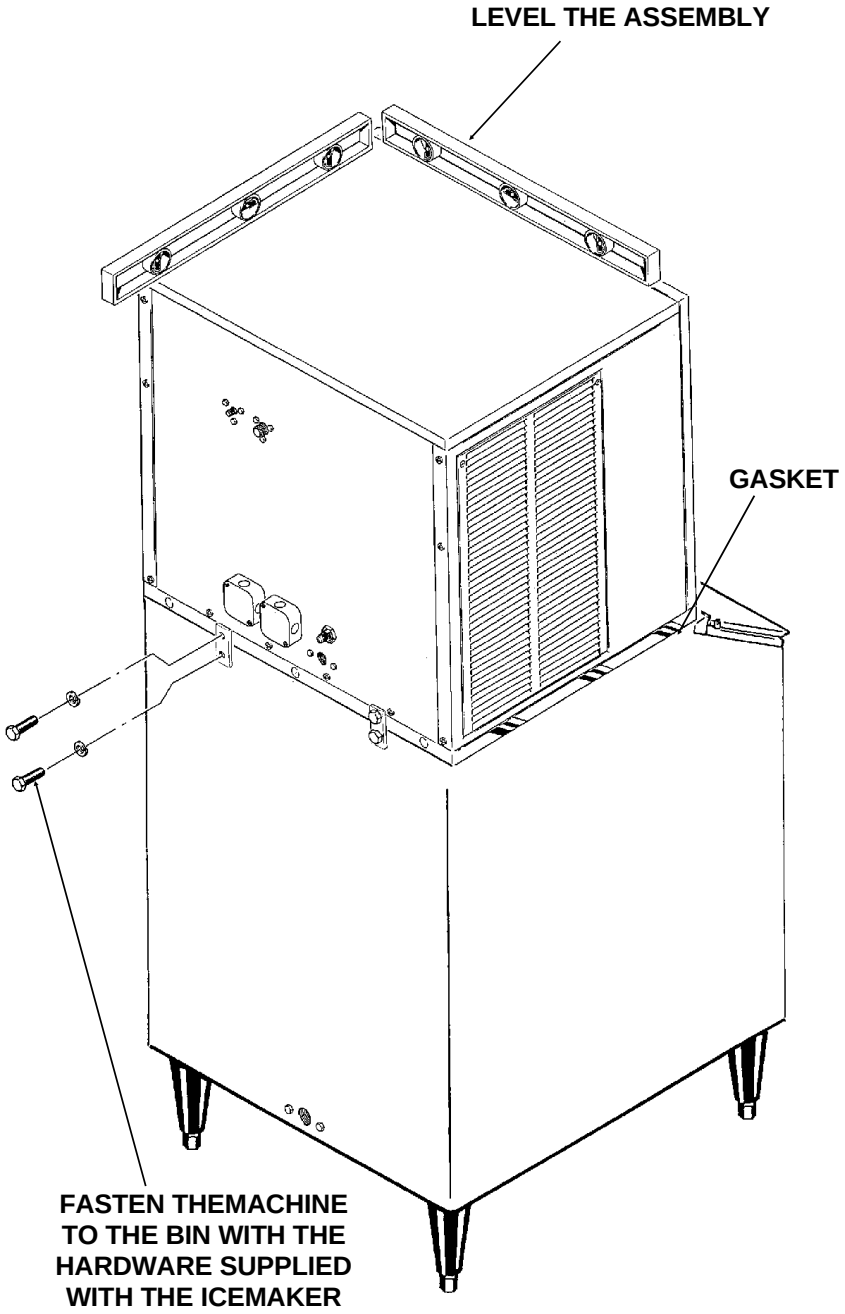

FOR THE INSTALLER: Remote Condenser Installation

Location:

Limited to a 40 foot or a 25 foot length of precharged refrigerant tubing connecting the icemaker to the remote condenser. The condenser must be above or level with the highest (if stacked) icemaker.

Select the best available location, protecting the condenser from extremes of dirt, dust, and sun.

Meet all applicable building codes. Usually the services of a licensed electrician are required.

Roof Attachment:

1. Install and attach the remote condenser to the roof of the building, using the methods and practices of construction that conform to the local building codes, including having a roofing contractor secure the condenser to the roof.

2. Have an electrician connect the remote condenser fan motor to the icemaker, using the junction box at the back of the icemaker.

PRECHARGED LINE ROUTING

////////////////////////////CAUTION////////////////////////////

Do not connect precharged tubing until all routing and forming of the tubing is complete. See the coupling instructions, next page for connecting instructions.

//

1. Each set of precharged refrigerant lines (either 25 foot or 40 foot) consists of a 3/8 inch diameter liquid line and a 1/2 inch diameter discharge line. Both ends of each line have quick connect couplings, one end has a schrader valve connection, that end goes to the condenser.

Note: The openings in the building ceiling or wall, listed in the next step, are the minimum sizes recommended for passing the refrigerant lines through.

2. Have the roofing contractor cut a minimum hole for the refrigerant lines of 1 3/4 inch. Check local codes, a separate hole may be required for the electrical power to the condenser.

////////////////////////////CAUTION////////////////////////////

DO NOT KINK OR CRIMP REFRIGERANT TUBING WHEN INSTALLING IT.

//

3. Route the refrigerant lines through the roof opening.

Follow straight line routing whenever possible.

Any excess tubing MUST be retained within the building.

4. Spiral the excess length of pre charged tubing inside the building. Use a horizontal spiral (as illustrated) to avoid any traps in the lines.

5. Have the roofing contractor seal the holes in the roof per local codes.

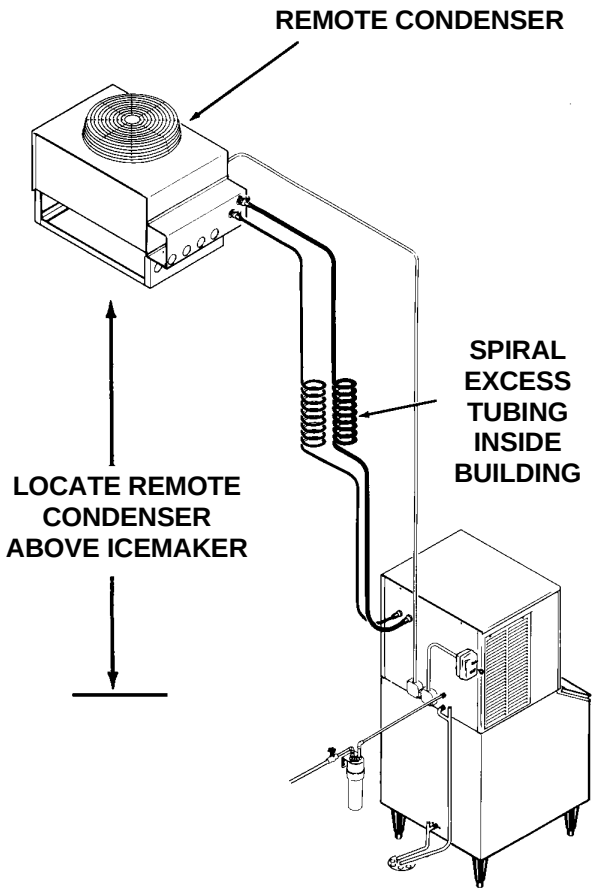

COUPLING INSTRUCTIONS

////////////////////////CAUTION////////////////////////////

The couplings on the sets of precharged lines are self sealing when installed properly. Carefully follow the instructions:

//

1. Remove the protector caps and plugs. Wipe the seats and threaded surfaces with a clean cloth to be certain that no foreign matter remains on them.

2. Lubricate the inside of the couplings, especially the O-Rings with refrigerant oil.

3. Begin tightening the couplings together by hand, then using two wrenches (it is important that ONLY the nut on the precharged lines be turned, the other parts of the couplings must NOT be allowed to turn or the process will tear out the diaphragms and they will be loose in the refrigeration system) tighten the coupling until it bottoms out or a definite increase in resistance is felt.

4. Using a marker or pen, mark a line lengthwise from the coupling union nut to the bulkhead. Then tighten the coupling and additional 1/4 turn. As the nut turns, the line will show when 1/4 turn is made.

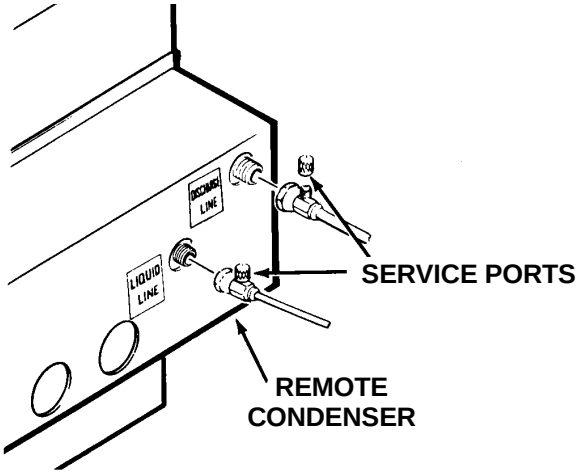

5. Connect the 3/8 inch liquid line (schrader valve end) to the remote condenser fitting marked "liquid line".

6. Connect the other end of the liquid line to the icemaker fitting marked "liquid line."

7. Connect the 1/2 inch discharge line (schrader valve end) to the remote condenser fitting marked "discharge line".

8. Connect the other end of the liquid line to the icemaker fitting marked "discharge line".

9. After all connections are made, and after the king valve has been opened, check the couplings for leaks.

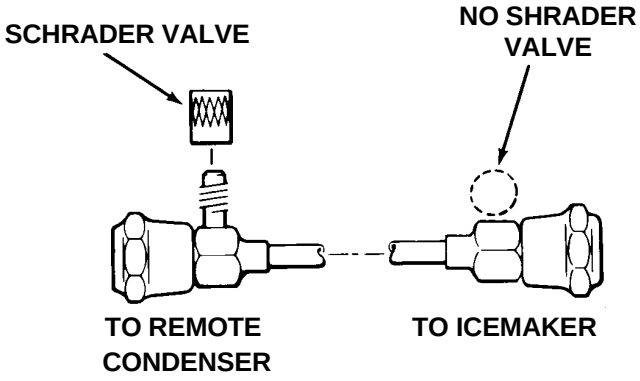

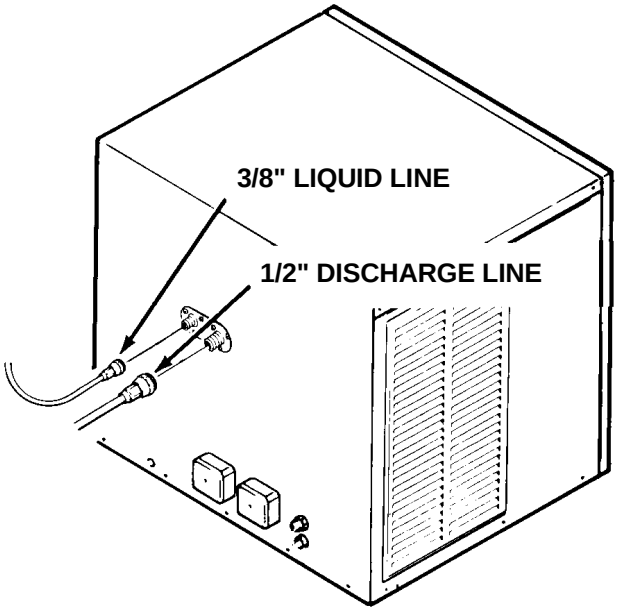

NM1250R

FOR THE INSTALLER: Stacking

////////////////////////////WARNING////////////////////////////

ELECTRICAL POWER MUST BE **OFF**
WHEN CONNECTING WIRES

//

1. Install the lower unit onto the bin.

2. Remove the top panel from the lower unit.

3. With the aid of a mechanical hoist, lift the upper machine onto the top of the lower unit. Align the rear, left, and right side panels.

4. Secure the bottom machine to the top machine with the hardware provided with the top unit: 4 cap screws, and 2 metal straps.

5. Use stacking kit **KSTACK30:**

a) In the lower unit, remove the ice chute cover.

b) In the upper unit, temporarily remove the ice discharge chute.

c) In the lower unit, insert the chute from the kit into the hole in the base of the upper unit, temporarily push it up into the base.

d) In the lower unit, install the new ice chute cover, then slide the connecting chute down into the hole in the new cover.

e) In the upper unit, reinstall the ice chute and cover. Remove the upper unit bin control sensors from their circuit board connections. Install the relay from the kit in the location illustrated.

f) Install interconnecting wires from the kit between the upper unit circuit board "opto" (purple wire) and "LED" (yellow wire) connections and the relay:

Purple to terminal 9.

Yellow to terminal 6.

Install wire harness from lower unit through the hole in the base, and connect to the relay terminals A & B.

g) In the lower unit, remove the wire harness from the transformer to the circuit board. Connect new wire harness (just routed from the upper unit) onto transformer and circuit board.

Replace the front panels.

Note: When started, the lower unit will start first, then the upper.

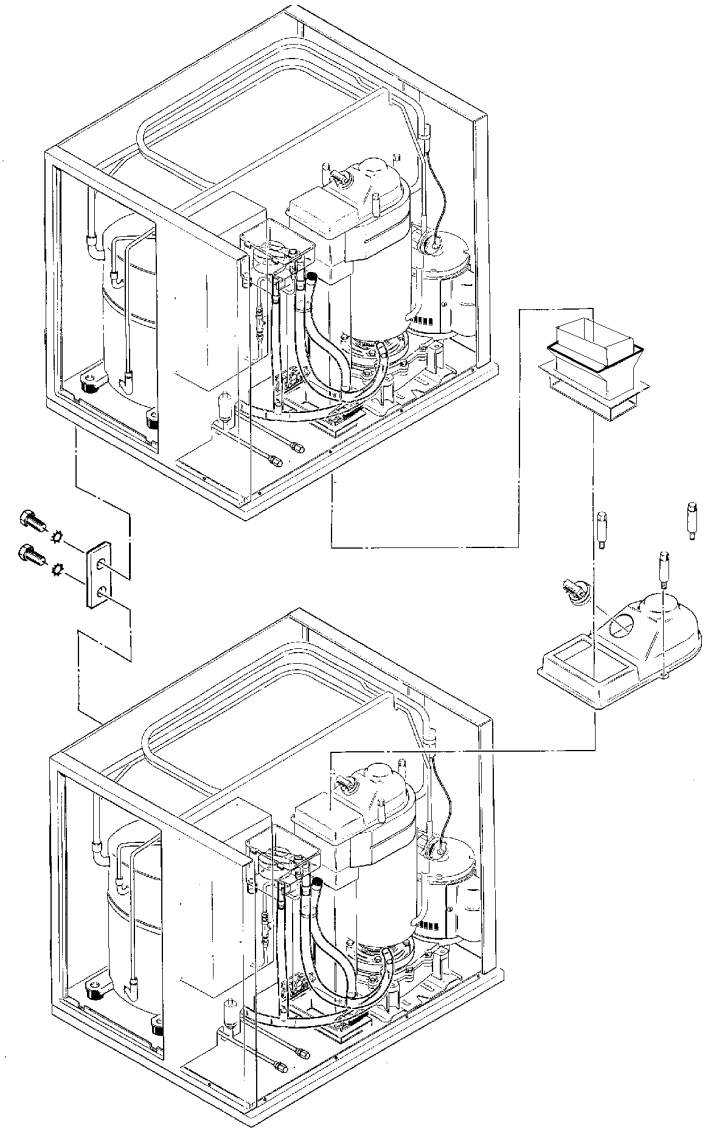

CONFORM TO ALL APPLICABLE CODES

Water Inlet

The recommended water supply is cold water. Use 3/8" O.D. copper tubing, connect to the 3/8" male flare at the back of the cabinet. Install a hand valve near the machine to control the water supply.

Drains

There is one 3/4" FPT drain at the back of the cabinet, the drain line is of the gravity type, and 1/4 inch per foot fall is an acceptable pitch for the drain tubing. There should be a vent at the highest point of the drain line, and the ideal drain receptacle would be a trapped and vented floor drain. Use only 3/4" rigid tubing.

Storage Bin: A separate gravity type drain needs to be run. Insulation of this drain line is recommended.

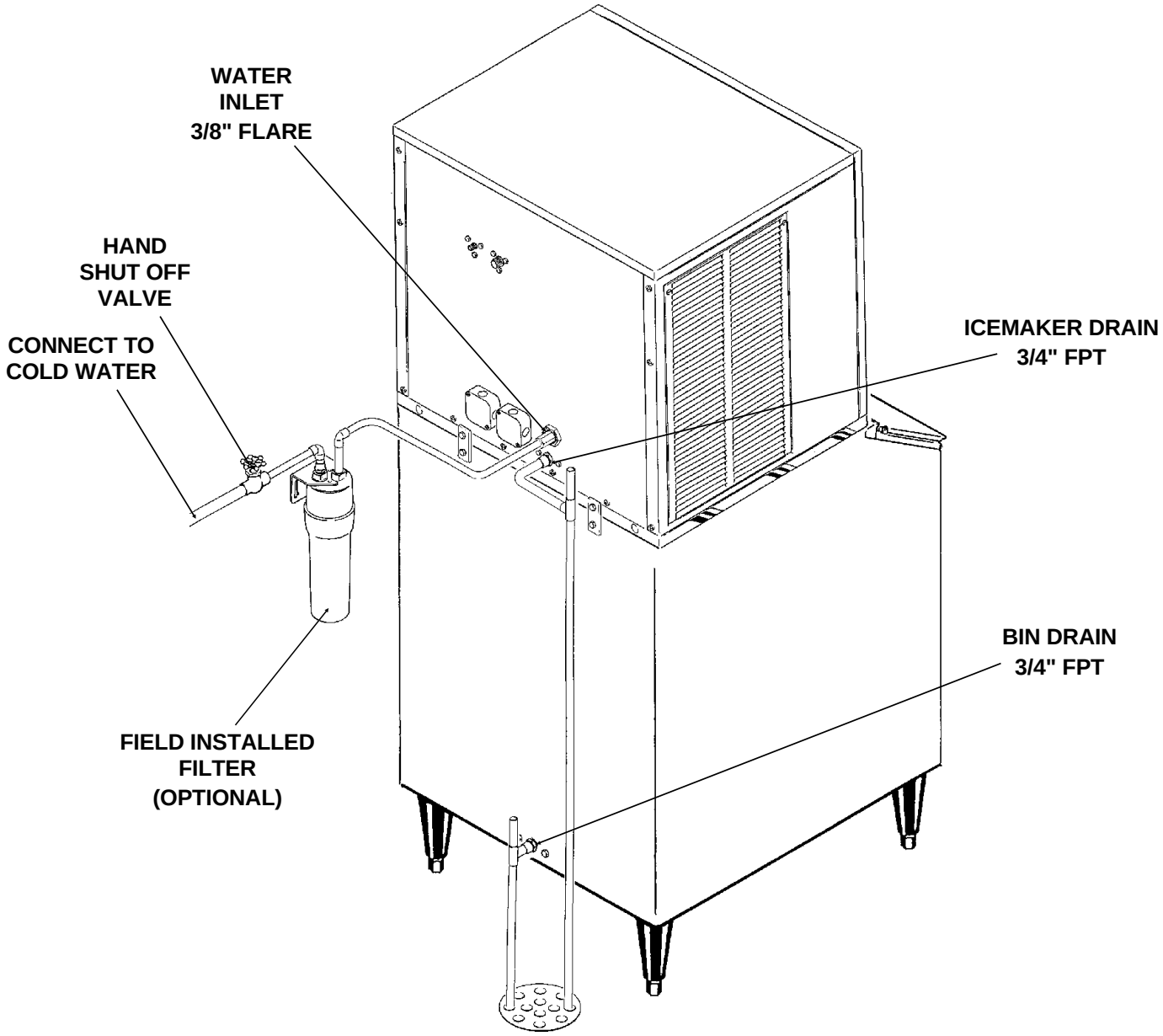

CONFORM TO ALL APPLICABLE CODES

The electrical power to the unit is supplied through the junction box at the rear of the machine.

Check the nameplate (located on the back panel) for the voltage requirements, and for the minimum circuit ampacity. The machine requires a solid chassis to earth ground wire.

The ice maker should be connected to its own electrical circuit so it would be individually fused. Voltage variation must remain within design limitations, even under starting conditions.

Electrically the remote condenser fan motor is connected to the icemaker at the contactor terminals for the compressor and the fan motor operates whenever the compressor operates.

Electrical connections are made at the junction box at the back of the icemaker and at the junction box on the remote condenser.

The remote condenser must be wired to the icemaker in accordance with local and national electrical codes with a minimum of 18 Awg. wire with an ground bonding wire connected to the ground screws provided in both the condenser and machine field wiring boxes. All outdoor wiring must be in rainproof conduit.

All external wiring must conform to national, state, and local electrical codes. The use of a licensed electrician is required to perform the electrical installation.

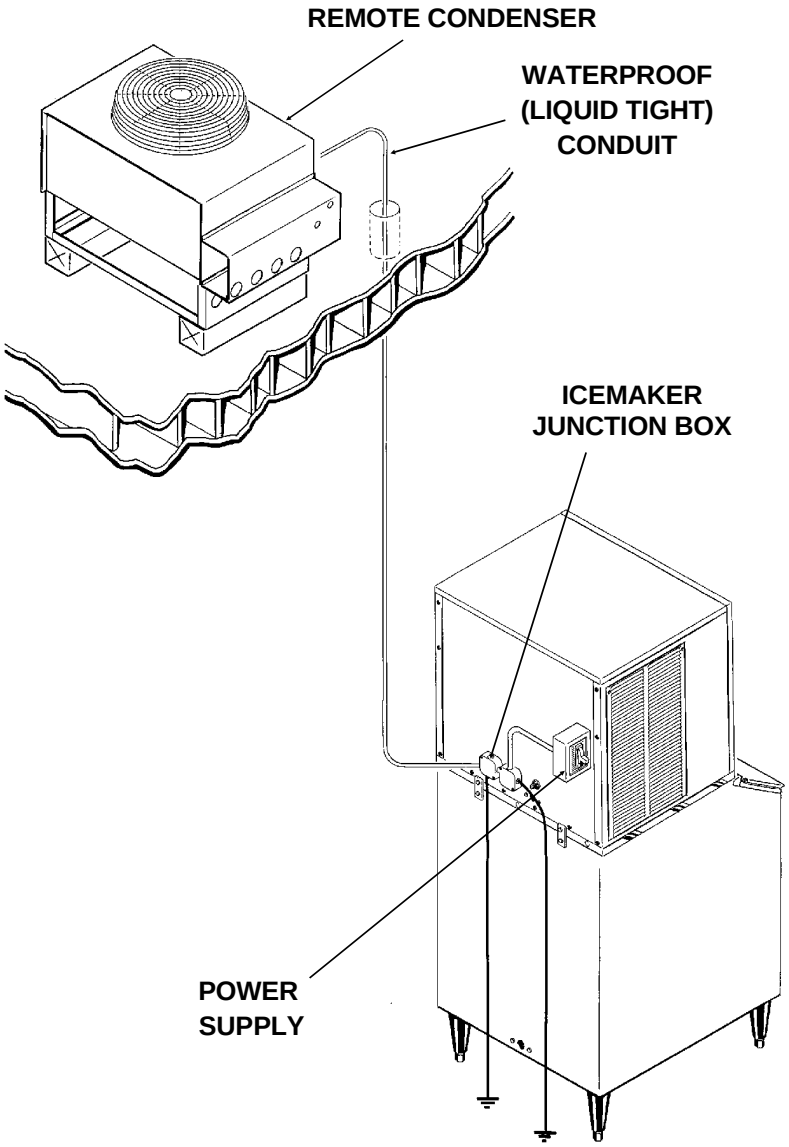

FOR THE ELECTRICIAN

FAN RELAY KIT

To install the KCMR230 fan relay kit when using (2) NM1250R icemakers and one 230 volt, two circuit remote condenser.

////////////////////////////WARNING//////////////////////////////

Do all wiring with electrical power OFF.

//

See the remote condenser nameplate for current requirements to determine wire size to be used for electrical hookup. Refer to wiring diagram.

All external wiring should conform to the national, state and local electrical codes. Usually an electrical permit and services of a licensed electrician will be required.

1. Mount the control box in a convenient location.
2. Attach a solid earth ground wire to the ground screw.
3. Route connecting wires from the first ice maker junction box (marked condenser fan) and connect it to the KCMR230 terminal strip marked: NO. 1 ICE MACHINE.
4. Route connecting wires from the second machine junction box (marked condenser fan) and connect it to the KCMR230 terminal strip marked: NO. 2 ICE MACHINE.
5. Route connecting wires from KCMR230 terminal strip marked: TO REMOTE FAN and connect at the remote condenser junction box.

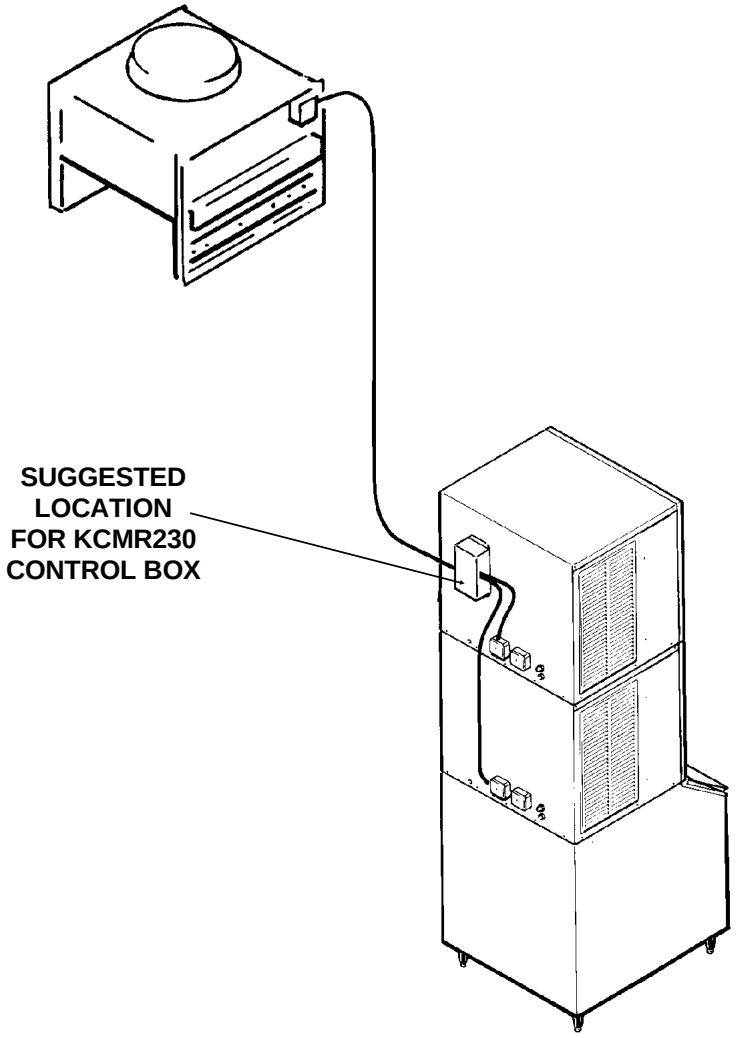

FOR THE ELECTRICIAN (Do this after Start Up)

6. Check phasing of the electrical circuit as follows:

A. The phasing of the wiring MUST now be checked, as incorrect phasing will result in a failure of the kit relay.

Below is an illustration of the KCMR230 terminal strip. Note that each terminal is marked: 1-2-3-4-5-6. For proper phasing:

Terminals #1 and #3 must be connected to the same side of the line (such as L1)

Terminals #2 and #4 must be connected to the same side of the line (such as L2).

B. Make a test with a volt meter as follows:

1. Switch on icemaker #1 first, then switch on icemaker #2.

(The compressors must be operating for this test. Do this after start up.)

2. Test with a volt meter between terminals #2 and #4, then between terminals #1 and #3. Compare the readings obtained to the ones in the following list:

C. Test terminals 1-2 = Full Voltage (208-230)
Test terminals 1-3 = No voltage
Test terminals 2-3 = Full Voltage
Test terminals 2-4 = No voltage
Test terminals 3-4 = Full voltage
Test terminals 1-4 = Full voltage

D. If there is full voltage where there should be no voltage, turn off icemaker #2, (both switches) Then turn off icemaker #1 (both switches). The connections at the KCMR230 terminal strip marked icemaker #1 must be reversed (put the wire that was on 1 on 2 and the wire that was on 2 on 1).

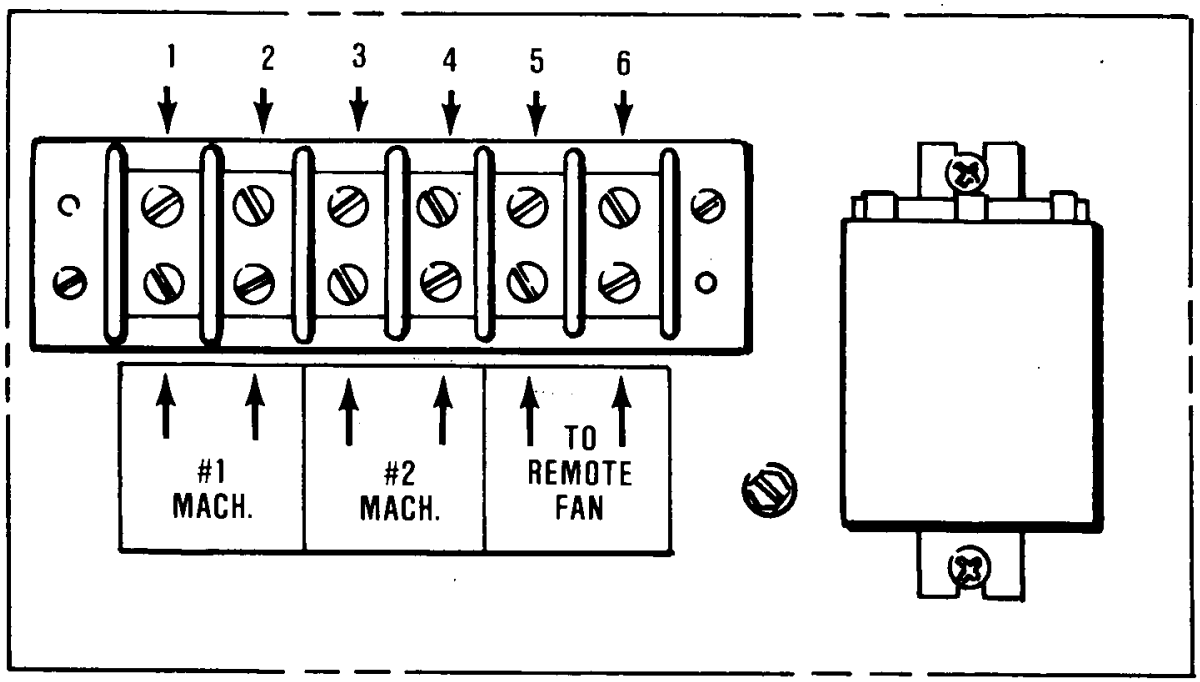

FOR THE INSTALLER: Completed Installation

A typical installation should generally appear as illustrated below. The remote condenser must be located above the icemaker and the precharged lines installed per the instructions on page 6.

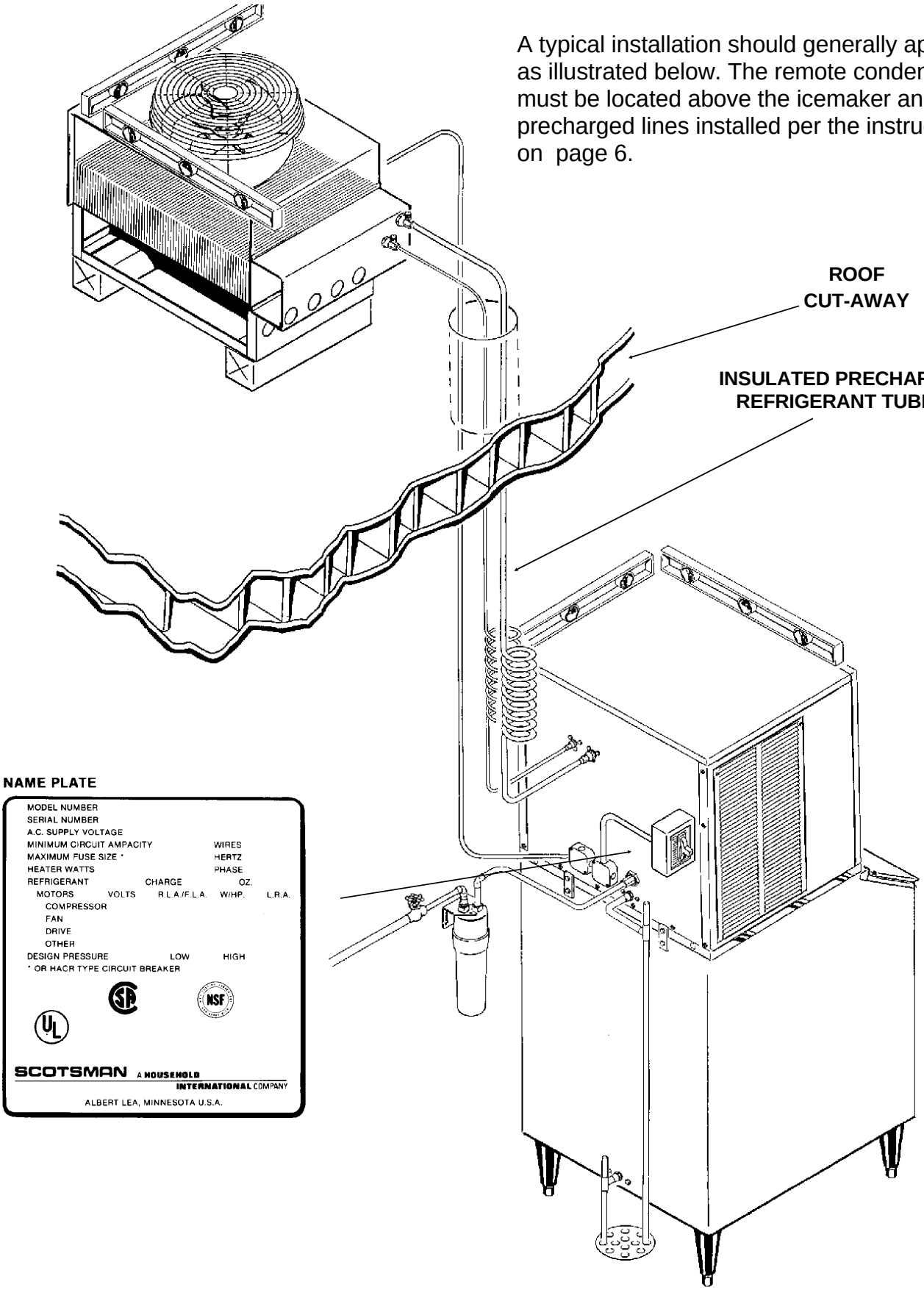

NM1250R

FOR THE INSTALLER: Final Check List

1. Is the ice system installed indoors in a location where the air and water temperatures are controlled, and where they do not exceed the design limitations?
2. Is there an electrical service disconnect within sight of the installed machine? Has the voltage been checked, and compared to nameplate requirements?
3. Have all the plumbing connections been made and checked for leaks?
4. Has the machine and bin been leveled?
5. Is there a minimum of 6" clearance at the rear, left, and right of the machine for proper service access and air circulation?
6. Is the water pressure a minimum of 20 psig?
7. Has the machine been secured to the bin?
8. If stacked, has the stacking kit been installed?
9. Is there a water shut off valve installed near the machine?
10. Is the remote condenser installed per local building codes, and in a place where it has adequate ventilation and minimal solar heat gain?
11. Has all shipping material (under and next to the gearmotor, and on top of the ice chute) and literature (inside the front panel) been removed from the units?
12. Have the remote condenser and precharged lines been properly installed?
13. Has the electrical connection between the icemaker and the condenser been made?
14. Verify that the master switch is in the OFF postion.

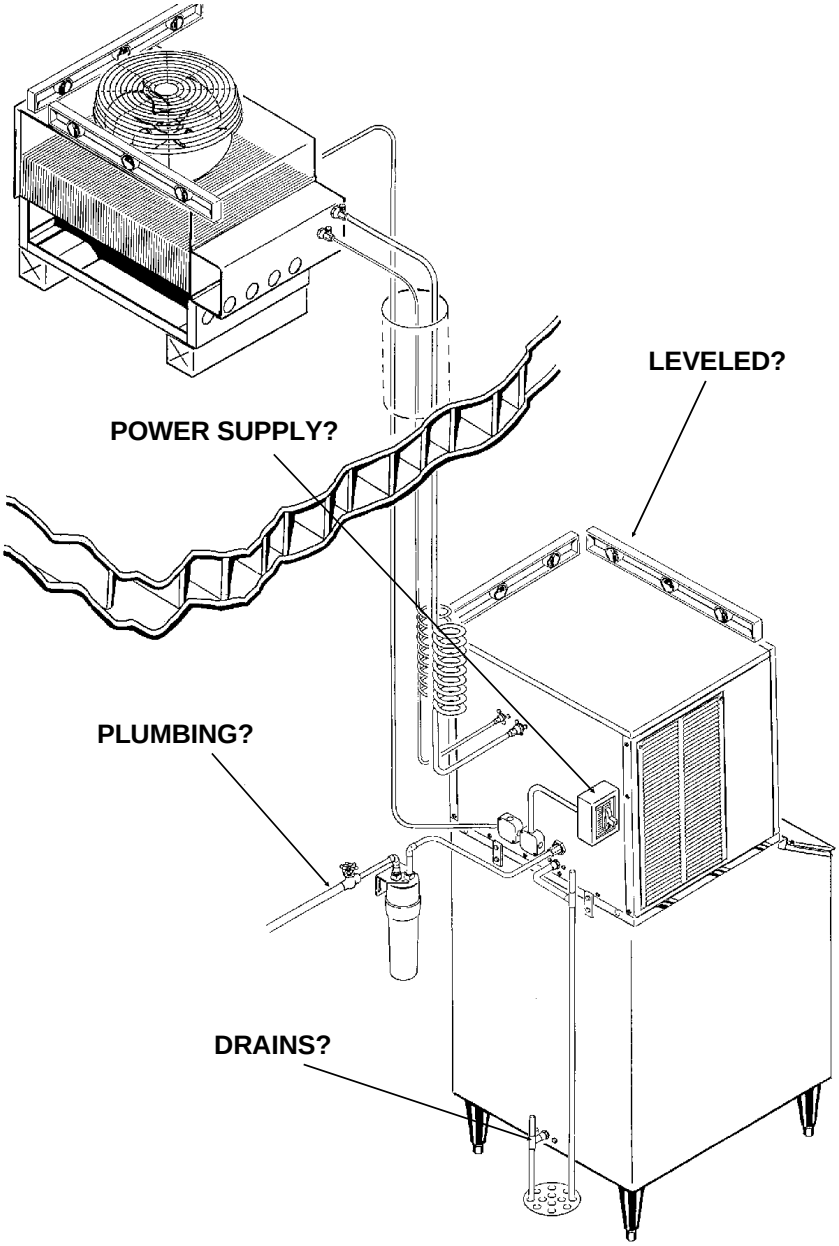

15. Switch on the electrical power.
16. Refer to Pre-Start instructions, the next page.

Pre-Start Inspection

1. Remove the front, left, and right side service panels.

2. Check that the styrofoam shipping blocks under the gearmotor, on top of the ice dischage chute, and between the gearmotor and the right side panel have been removed.

3. Inspect the interior of the machine for loose screws or wires. Check that no refrigerant lines are rubbing each other. Check that the fan blade turns freely (remote condenser).

4. Check that the refrigerant lines are properly installed.

5. Check that the electrical power has been on for at least 12 hours and that the compressor dome is warm.

6. Check that the unit is installed corerectly according to the final check list on page 14.

Start Up

1. Go through the pre-start inspection.

2. Open the hand valve, observe that water enters the water reservoir, fills the tube from the reservoir to the evaporator, and then shuts off. Check for leaks.

3. Open the King Valve.

4. Turn the master switch on, and press the start/reset switch.
The electrical start up sequence is now on automatic.
A. There should be a short (15 second) delay before the gearmotor starts.
B. After the gearmotor starts, the liquid line valve will open, the pump down control will close and the compressor will start.

5. The remote condenser fan turns, and the condenser begins to discharge warm air.

6. The unit should soon be making ice, if desired the low side pressure can be checked, it should be 30 psig + or - 4 psig. The discharge pressure will depend upon air and water temperatures, but should be between 200 psig and 280 psig.
Gearmotor amps should be about 1.2.
Compressor (single phase) amps should be about 7.1

7. **THERE ARE NO ADJUSTMENTS TO MAKE**, so replace the panels.

8. Clean and/or sanitize the storage bin interior, wipe off the exterior with a clean, damp cloth.

9 Give the owner/user the service manual, instruct him/her in the operation of the unit, and make sure they know who to call for service.

10. Fill out the manufacturers registration card, and mail it to the Scotsman Factory.

11. Fill out the field quality audit form, and mail it to the Scotsman factory.

NM1250R

COMPONENT DESCRIPTION

Control Box: Contains the electrical controls that operate the machine.

High Pressure Cut Out (control): A manual reset switch sensing the high side refrigeration pressure. It is set to shut the machine off at 450 psig.

Reset Switch: Manual reset. Glows when the unit shuts off from ice discharge chute being overfilled (opening the microswitch at the top of the chute), or if either of the pressure cut out switches opens.

Evaporator: A vertical stainless steel tube, refrigerated, and water filled. In it there is a stainless steel auger.

Reservoir: Float operated, it maintains the water level in the evaporator at a constant level, it also contains the water level sensor.

Water Level Sensor: Senses if there is water in the reservoir to make ice out of. Will shut the machine off it there is none.

Ice Discharge Chute: Directs the ice produced by the evaporator into the storage bin.

Ice Level Sensor: An electronic "eye", it senses the presence of ice in the bottom of the ice discharge chute. Operates to turn the ice machine on and off automatically as the level of ice in the bin changes.

Gear Motor: An oil filled, speed reduction gearbox, driving the auger.

Cleaning Drain Tube: When uncapped and lowered, drains the evaporator.

Compressor: The refrigerant vapor pump.

Expansion valve: The refrigerant metering device.

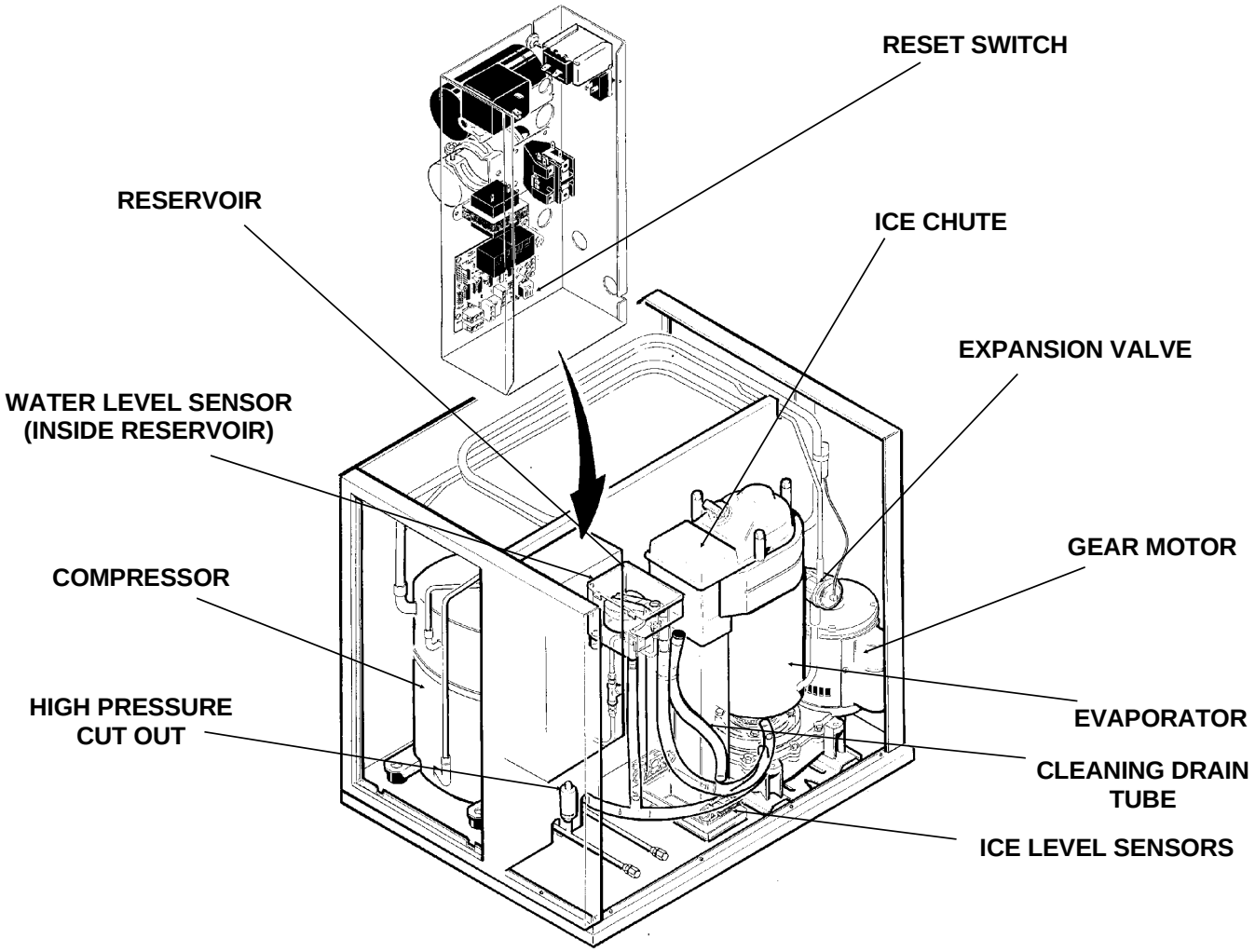

COMPONENT DESCRIPTION: Control Box

Contactor: A definite purpose contactor connecting the compressor and the remote condenser fan motor to the power supply.

Circuit Board: Controlling the ice machine through sensors and relays. The sensors are: ice level, and water level. The relays are for the gear motor (with a built in time delay to clear the evaporator of ice when the unit turns off) and for the liquid line valve.

Transformer: Supplies low voltage to the circuit board.

Pump Down Control: A switch to control the compressor, depending upon low side pressure: closes at 18 PSIG, and opens at 8 PSIG.

Potential Relay: The compressor start relay.

On/Off Switch: Manual control for the machine.

Reset Switch: Manual reset. Glows when the unit shuts off from ice discharge chute being overfilled (opening the microswitch at the top of the chute), or if either of the pressure cut out switches opens.

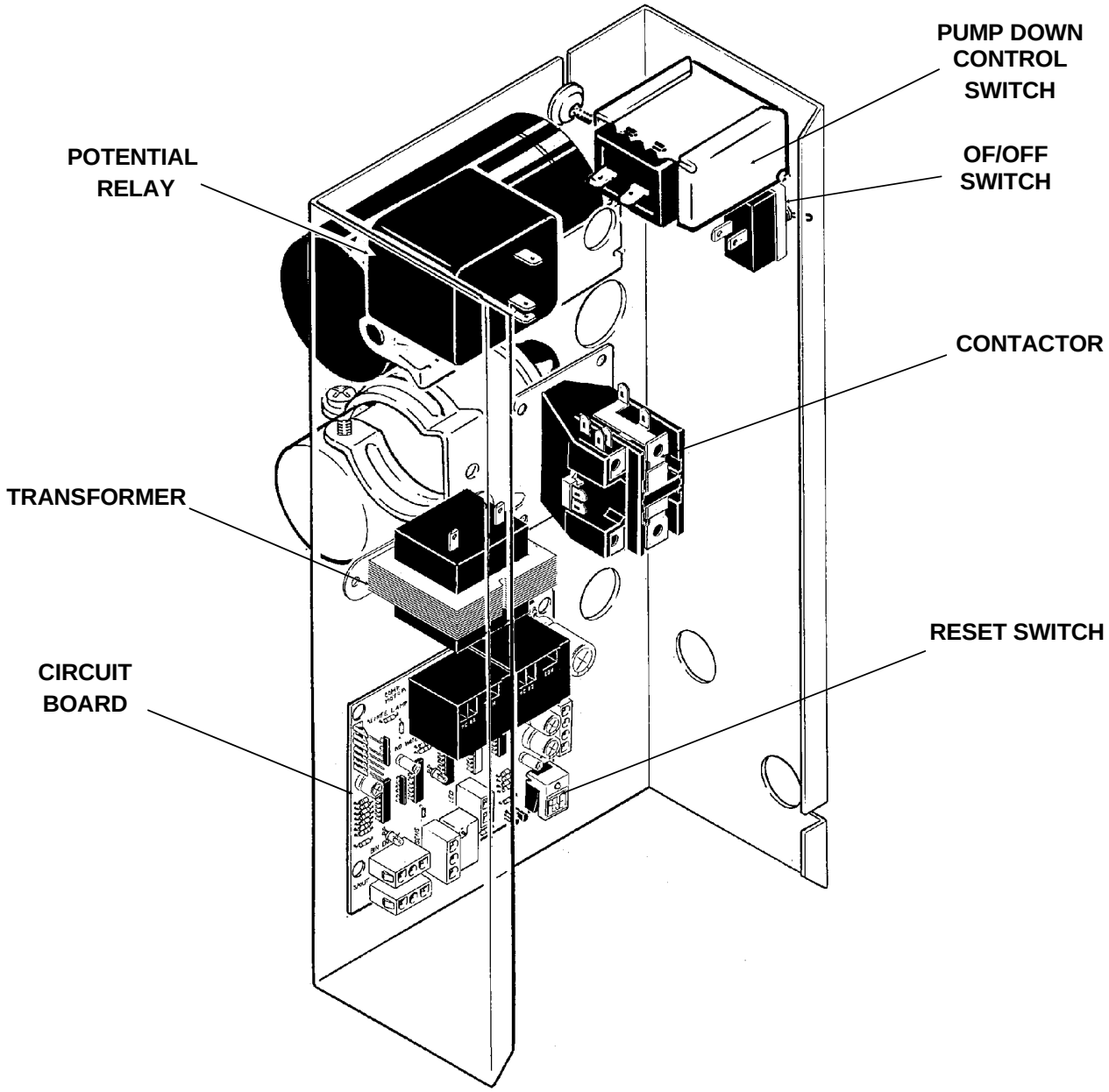

ELECTRICAL SEQUENCE

Refer the wiring diagram as needed.

If the machine is switched off at the master switch, but is otherwise ready to go, switching the master switch to ON does the following:

- The bin empty light on the circuit board goes on
- There is a 15 second delay
- If there is enough water in the reservoir, the circuit board will allow the machine to start up.

Start up consists of:

- The liquid line relay and auger motor relay become energized, connecting power to the liquid line solenoid coil and the windings of the auger motor.
- The liquid line solenoid opens, raising the low side pressure.
- The pump down control closes
- The auger motor starts, and the centrifugal switch closes, connecting power to the compressor contactor coil.
- The contactor is energized, connecting power to the compressor, and the compressor starts.
- As ice goes past the ice level sensors, the bin empty light will be on and the machine will continue to run, unless the ice stays between the sensors for more than 15 seconds (bin full). At that point, the machine shuts down.

Shut Down consists of:

- The liquid line solenoid relay opens, lowering the suction pressure.
- The pump down pressure control opens.
- The compressor contactor opens
- The compressor stops
- The auger motor is run by the circuit board for 2.5 more minutes, clearing out ice in the evaporator, and then
- The auger motor relay opens, and the auger motor stops.

If the ice level sensor is clear (bin empty) for more than 15 seconds, the machine will start up again.

Another purpose of the circuit board is to turn the machine off if there is not enough water in the machine.

- When the water level in the reservoir falls below the water level sensor, the machine will "shut down"
- When the water refills the reservoir, the machine will start up again.

Separate from the circuit board:

- If the high pressure control (cut out) opens, the machine will stop immediately (through the relays on the circuit board) and cause the reset switch on the circuit board to light up. It must be manually reset at the control and at the reset switch on the circuit board.
- The pump down control switch will stop & start the compressor.
- If the spout switch opens the machine will stop immediately (through the relays on the circuit board) and cause the reset switch on the circuit board to light up. It is a manual reset at the circuit board.

The master switch is the manual control for the complete machine, but it is not a service disconnect.

OPERATION

Water

Water enters the machine through the 3/8" male flare at the rear of the cabinet, goes to the water reservoir which it enters through the float valve.

The water then goes out the bottom of the reservoir tank to the bottom of the evaporator. Reservoir overflow or evaporator condensation is routed to the drain.

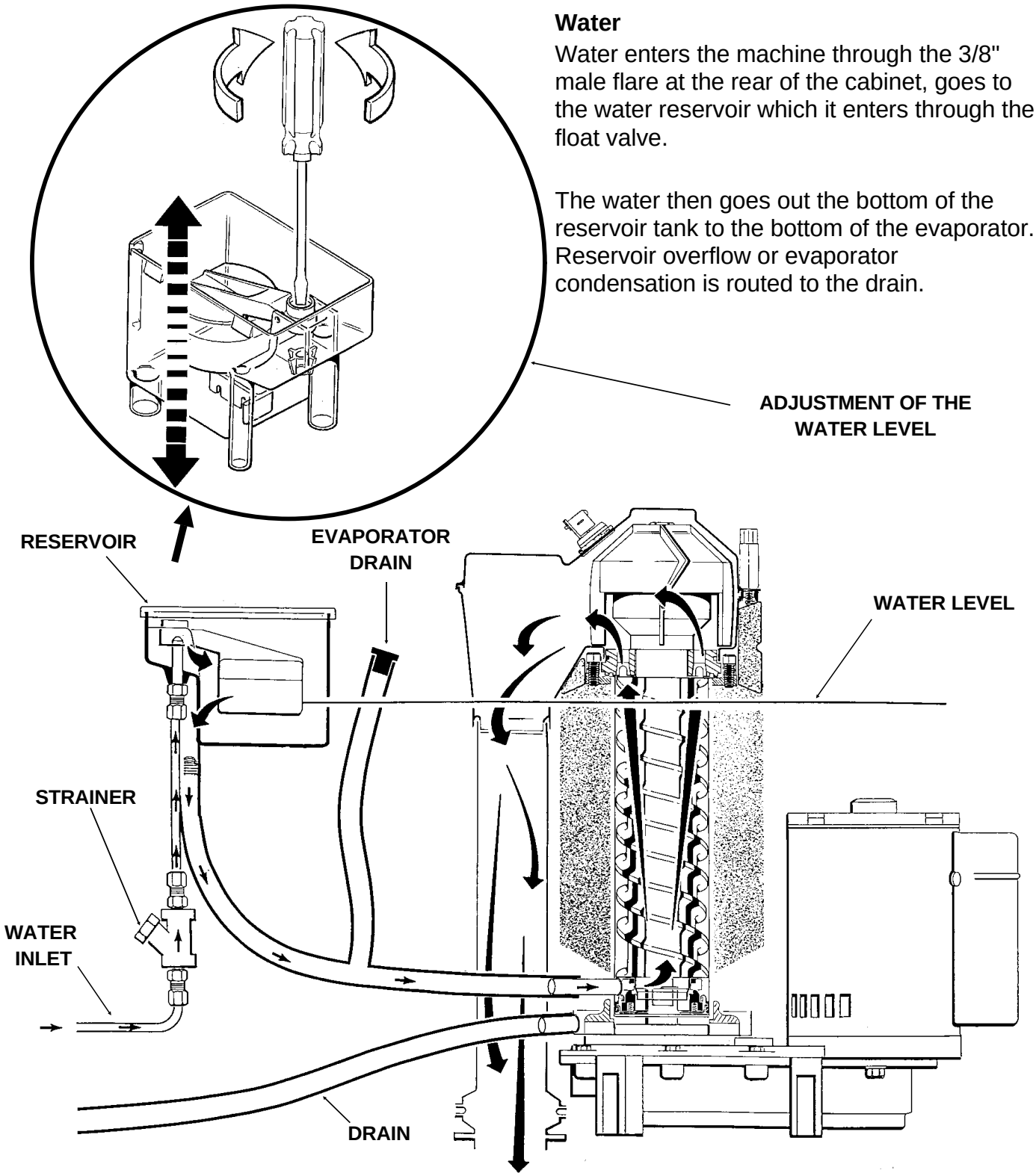

NM1250R

OPERATION:

Beginning at the compressor, the refrigerant 502 is compressed into a high temperature gas. The discharge line directs this gas to the condenser and to the head pressure control At the **remote condenser** the gas is cooled by air and it then condenses into a liquid. This high pressure liquid then goes through the liquid line to the liquid line connection at the **head pressure control.** If the head pressure is high enought the liquid refrigerant will go through the valve and enter the **receiver.** From the receiver, the liquid refrigerant flows through the **liquid line valve** and then to the expansion valve.

The **thermostatic expansion valve** meters liquid refrigerant into the **evaporator,** the volume of liquid refrigerant depending upon the temperature of the evaporator; warmer evaporators get more refrigerant and colder evaporators get less. At the evaporator, the refrigerant enters an area of relatively low pressure, where it can easily "boil off" or evaporate. As it evaporates, it absorbs heat from the evaporator and whatever is in contact with it (such as the water inside it). After the evaporator, the refrigerant, now a low pressure vapor, goes through the suction line back to **compressor**, where the cycle is repeated.

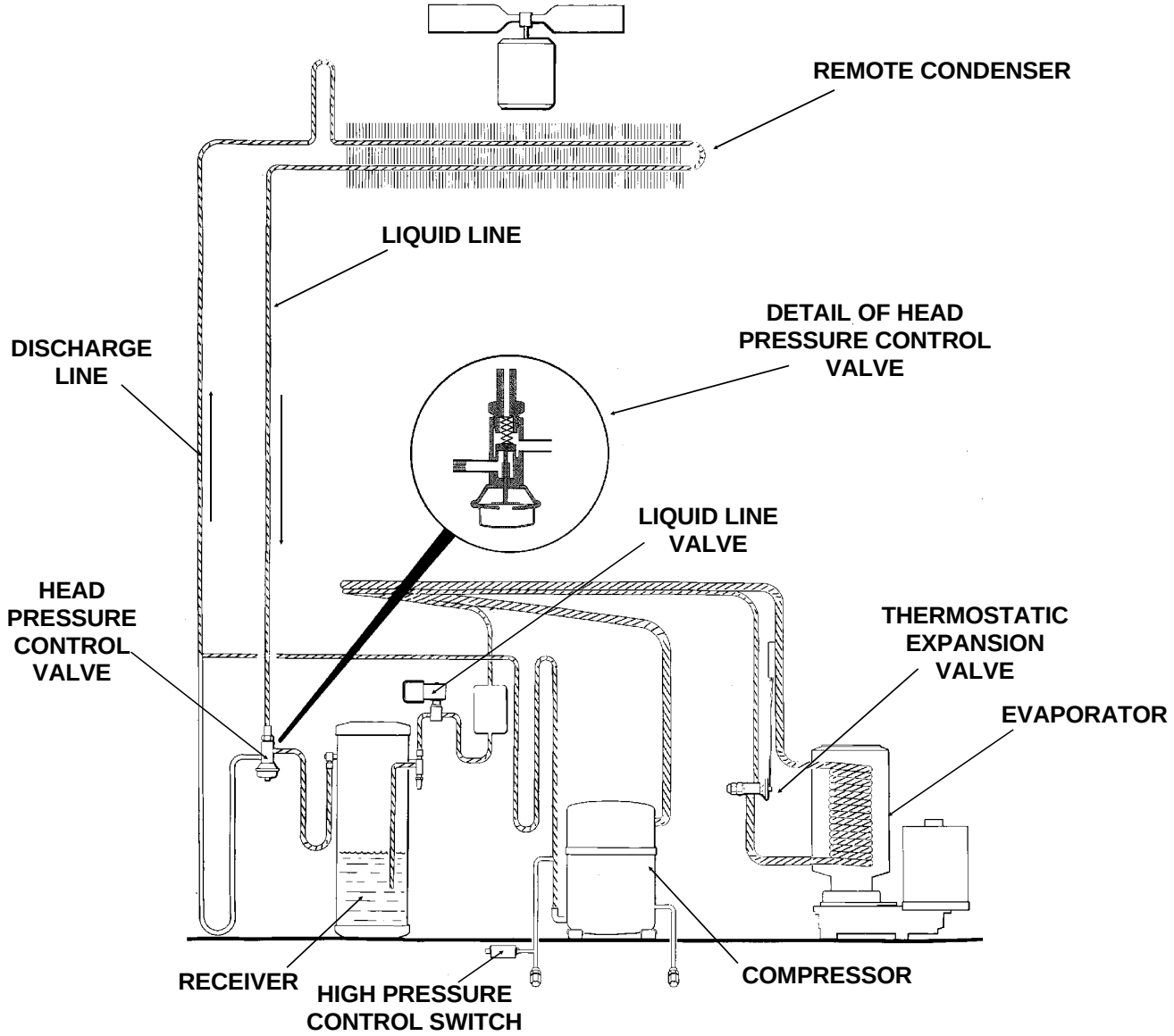

LOW CONDENSING TEMPERATURE

The refrigeration system under low condenser air temperatures is much the same as it is under higher temperatures, with the exception that the resulting low head pressures cause the head pressure control to close off the liquid line between ththe condenser and the receiver. This forces more refrigerant into the condenser (with a small amount of discharge gas going into the receiver to maintain pressure until the head pressure is built back up to the rated gauge pressure of 220 psig). At that pressure the valve opens up the liquid line from the condenser to the receiver.

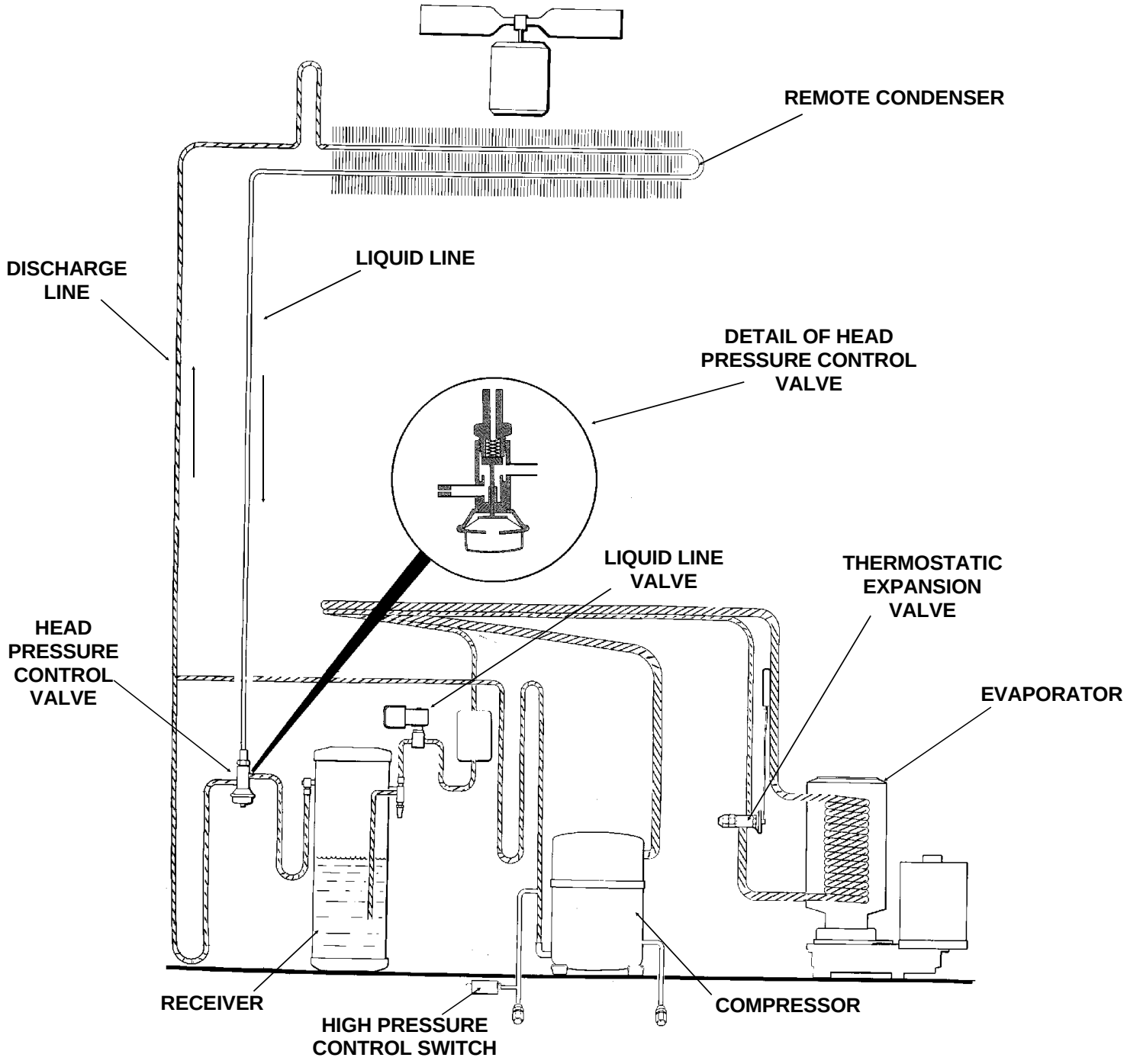

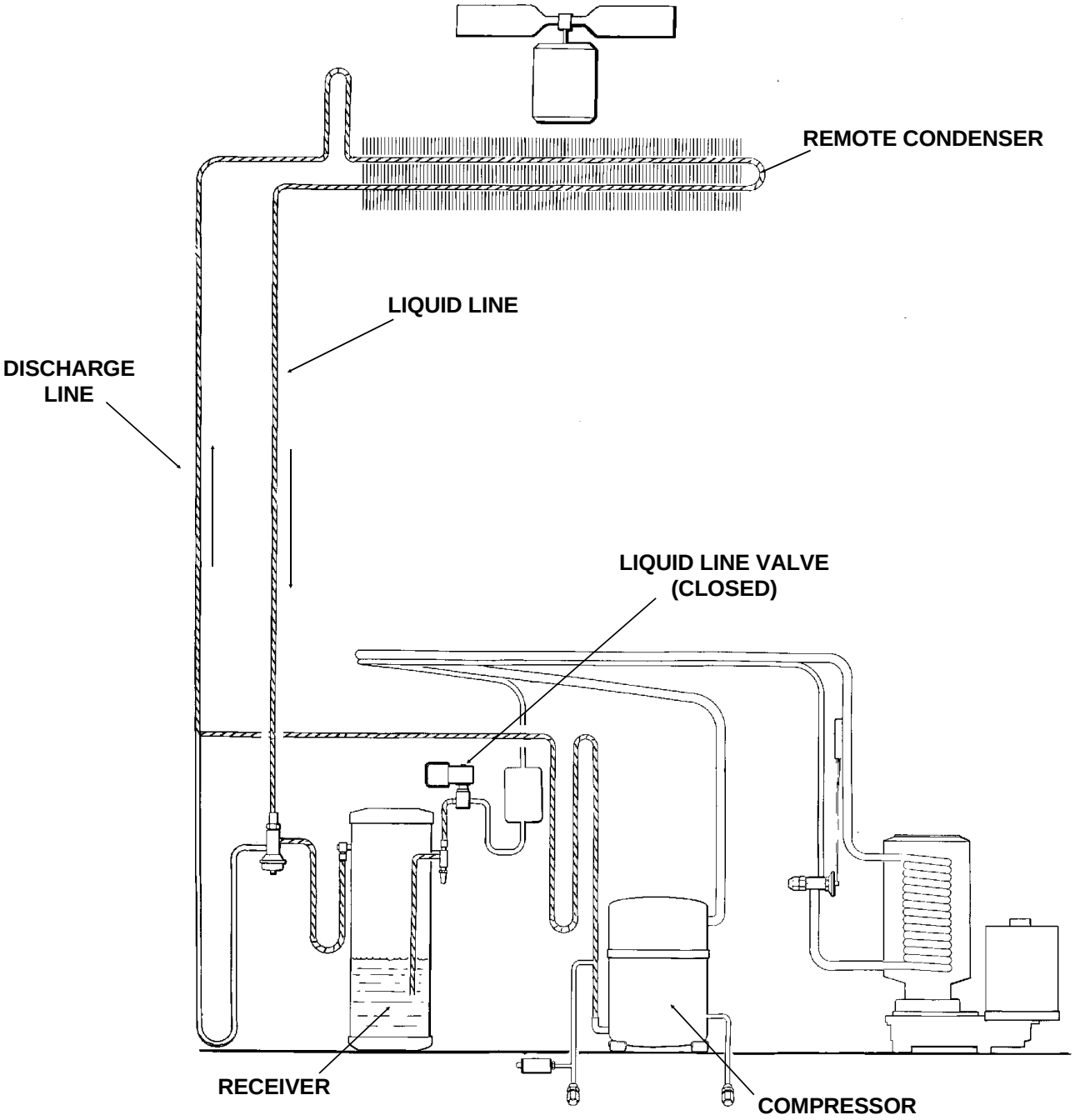

PUMP DOWN

During the pump down cycle (usually initiated by the circuit board de-energizing the liquid line valve) the discharge gases flow through their normal path to the remote condenser, through the head pressure control, and into the receiver. At this point the refrigerant flow is stopped by the closed liquid line valve. This action forces the refrigerant into the receiver and keeps it out of the compressor. The pump down continues until the pump down control, opens turning the compressor off.

MAINTENANCE AND CLEANING

////////////

ICEMAKER MAINTENANCE:

////////////////////////////WARNING////////////////////////////////
Disconnect electrical power before begining.
//

1. The bin control uses devices that sense light, therefore they must be kept clean enough so that they can "see". At least twice a year, remove the bin control sensors from the base of the ice chute, and wipe the inside clean, as illustrated.

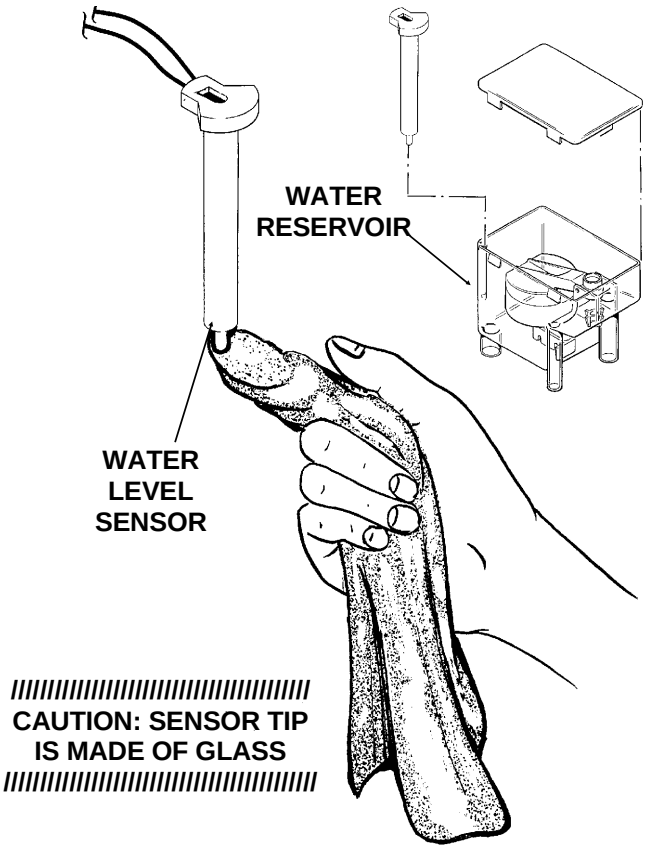

2. The ice machine senses water level by a probe located in the water reservoir. At least twice a year, the probe should be removed from the reservoir, and the tip wiped clean of mineral buildup.

3. The top bearing in the breaker should also be checked at least **two times per year**.

Check the thrust bearing by:

- removing the ice chute cover
- unscrewing the ice sweep
- removing the water shed
- using a spanner wrench and unscrewing the breaker cover
- unscrewing the auger stud

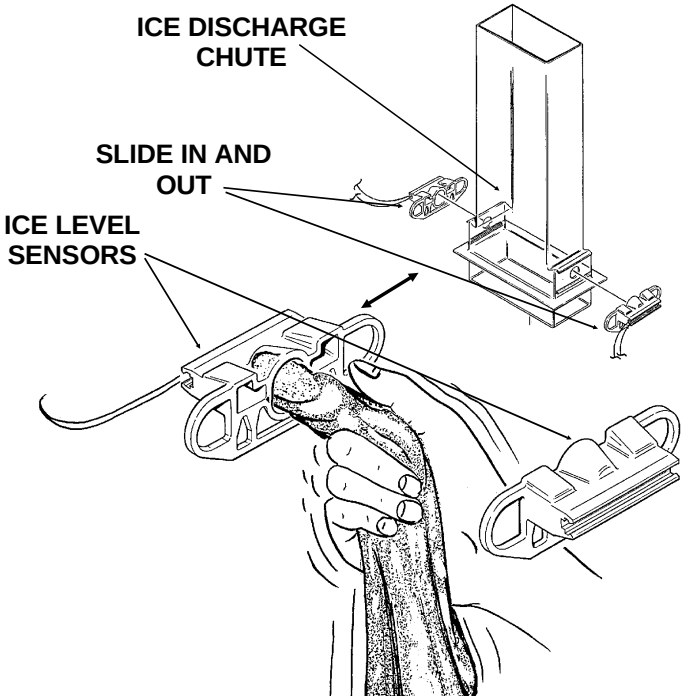

Inspect the assembly, looking for wear .

4. Clean the remote condenser. Use a vacuum cleaner or coil cleaner if needed. Do NOT use a wire brush.

5. Check and tighten all bolts and screws.

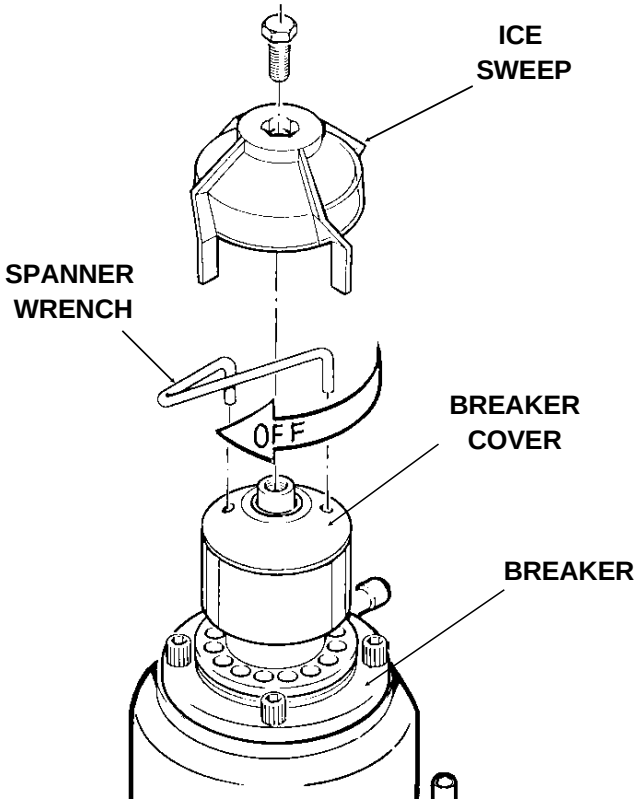

MAINTENANCE: Auger

////////////////////////////WARNING////////////////////////////
Disconnect electrical power before begining.
//

In some areas the water supply to the icemaker will have a great deal of minerals in it, and that will result in an evaporator and auger becoming coated with these minerals, requiring a more frequent removal than twice per year. If in doubt about the condition of the evaporator and auger, the auger can be removed so the parts can be inspected.

Note. Water filters can filter out suspended solids, but not dissolved solids. "Soft" water may not be the complete answer. Check with a water treatment specialist regarding water treatment.

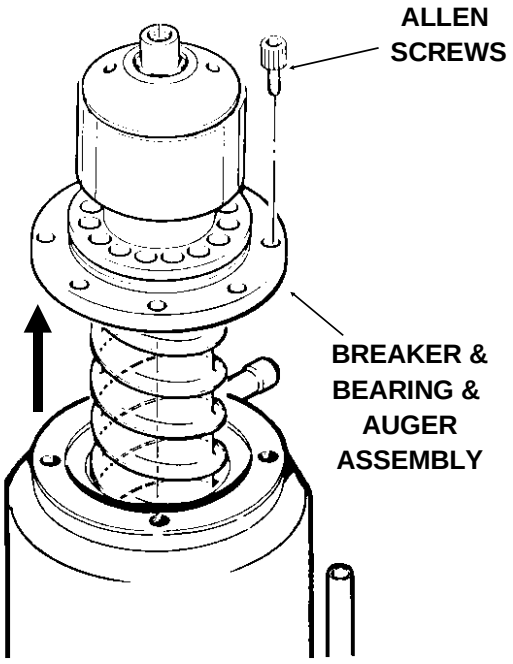

For more information on removal of these parts, see REMOVAL AND REPLACEMENT.

1. To remove the auger, remove front and top panels. If top panel cannot be removed, or if there is less than 6" clearance over the top of the machine, the gearmotor/evaporator may be slid out for service access. See Removal and Replacement.
2. Remove 3 hex studs holding the ice chute cover to the ice chutebody, and remove the cover.
3. Unscrew and remove ice sweep.
4. Loosen band clamp under ice chute, and remove ice chute body from evaporator.
5. Remove 4 allen screws holding breaker to evaporator.
6. Pull up on breaker to remove auger.

Allow the auger to dry, the stainless steel of the auger and evaporator must be clean and bright.

Clean the auger and evaporator as required.

DO NOT HONE THE EVAPORATOR.

7. Replace the water seal.
8. Reverse to reassemble.

////////////////////////////WARNING////////////////////////////
The auger has sharp edges, handle with gloves.
//

SERVICE DIAGNOSIS: Condition - No Ice Being Produced

STATUS: *NOTHING OPERATES*

A. Check: **Voltage** to the unit, restore it if there is none. Compare to the nameplate.

B. Check: The **master switch**, switch ON if off.

C. Check: The 2 reset switches (circuit board and high pressure): depress and release each switch. If the unit still does not start, check the spout switch, or high side pressure.

D. Check the **high pressure cut out switch.**

1. This pressure switch opens at 450 psig. Check the high side pressure, reset the switch and observe that the fan is forcing air through the condenser. If the switch opens at pressures below 450 psig, replace the switch. If the pressures rise above the trip out point, and the unit shuts down:

    a. Check for adequate air flow. Clean the condenser. If the air flow is poor because of the installation, advise the user that the unit should be moved, or the air around it kept cooler.

        Check the fan motor for tight bearings and proper rotation.

        Check that the fan blades are clean, and the fan secure to the fan motor shaft.

    b. Check the head pressure control valve, it should be maintaining a head pressure above 220 psig. If the unit has the correct charge, and the condenser is clean, and the refrigerant lines are not kinked or twisted, and the condenser is not overheated by external heat loads, the head pressure should be under the trip out point of the head pressure control switch. If all of the above are found to be good, and the machine trips out on high head pressure, replace the head pressure control valve.

E. Check the **spout switch**.

1. This switch will open if the bin control (ice level sensor) does not shut the machine off when the ice storage bin is full of ice: ice backs up in the ice chute, and internal pressure opens the switch, stopping the machine. After the ice melts, the switch will reset but the machine will not restart until the reset switch in the control box is pressed. If the machine does start, check:

    a. The ice level sensors, they may need cleaning (see maintenance).

    b. The circuit board, see next page.

F. Check the **water level.** If there is not enough water in the reservoir, the water level sensor will keep the machine from starting.

a. Check the water level, restore/adjust if low.

b. Check the water level sensor, clean if dirty, (see maintenance).

c. Check the circuit board, see next page.

If the machine does not start, see the next page.

SERVICE DIAGNOSIS: Condition - No Ice Being Produced

STATUS: *NOTHING OPERATES*

G. Check: The gear **motor**, if it will not run, the compressor will not run. If no power to it: Check: the **indicator lights** on the circuit board, the **bin empty** light should be ON, the **no water** light should be OFF **.**

1. If the **bin empty** and **no water** lights are off, check the **transformer**.
   a**.** Transformer "load" side should have 12 to 15 volts. If not, check the "line" side. The line side should have between 208-230 volts. If the line side has the correct voltage and the load side does not, replace the transformer.
2. If the transformer is good, and the **bin empty** light is OFF, check the **ice level sensors**.
   a**.** Remove sensors by sliding them sideways out of the ice chute. Visually inspect them, clean if needed.
   b**.** Look through the ice chute "eye" hole for something blocking the ice chute.
   c. If the unit still does not run, replace the ice level sensors.
   d**.** If the bin empty light is still OFF, check the **circuit board**.
      1. Unplug "opto trans" and "LED" connectors from the circuit board.
      2. Plug "opto trans" and "LED" connectors from the Scotsman Electronic Control Testor Model NM1 into the circiut board **(see page 38).**
         a. Move the "bin full" switch on the tester to the full position. The bin full light on the tester should be ON, if not, replace the circuit board.
         If the bin full light on the tester is ON, move the tester switch to "bin empty" the light on the tester should go OFF and the bin empty light on the circuit board should go ON. If not, replace the circuit board. If it does as above, and the machine still does not run, replace the ice level sensors.
3**.** If the transformer is fine, and the "no water" light is ON, check the **water level sensor.**
   a. Check the water level in the **reservoir,** restore if low. If the water level is ok:
   b. Remove the water level sensor from the reservoir and clean the tip if dirty.
   //
   CAUTION: THE TIP IS MADE OF GLASS
   //
   c**.** Replace the water level sensor. If the no water light is still on, check that the "water sen" plug is firmly plugged into the circuit board.
   d. If the no water light is still on,
      1. Unplug the "water sen" connector from the circuit board.
      2. Plug "water sen" connector from the control tester into the circuit board.
         a. Move the water switch on the tester to "no water" and the no water light on the circuit board should go on. If not, replace the board..
         b. Move the water switch to the" water" position, the no water light should go off, if not, replace the circuit board.
         c. If after the above, the machine still will not run, replace the water level sensor

STATUS: *GEARMOTOR OPERATES, COMPRESSOR DOES NOT*

A. Check the pump down control switch.

1. This pressure switch opens at 6-10 psig, and closes at 16-20 psig. If open check the low side pressure, if after running the machine the switch opens at a pressure higher than 10 psig, replace the switch.

The low pressure control switch could remain open for any of the following reasons: Low refrigerant charge, auger not turning, restricted system, TXV not opening, liquid line valve not opening.

2. Check the low side pressure, the low pressure cut out switch should remain closed at any pressure higher than 10 psig. If less than that:

a. Check if the **auger** is turning, if it is not, remove the **gearbox** and:

Check for internal damage, repair and replace in the machine.

b. Check for low charge, add some refrigerant, if the unit begins to operate, (normal low side pressure being about 30 psig) stop and look for a leak, repair, replace the drier, evacuate, and weigh in the nameplate charge. If, with added charge, the unit does **not** operate:

Check for a restricted system, replace the drier, evacuate, and weigh in a nameplate charge.

Check for a **Thermostatic Expansion Valve** that does not open, if defective, replace it. Replace the drier, evacuate, and weigh in the nameplate charge.

c. Check the liquid line solinoid valve, it should have power to it, if not:

Check the connections on the circuit board. The liquid line (or compressor) relay on the circuit board may have failed. If so, replacethe circuit board.

If there is power to the valve, the coil may be open, or the valve jammed, replace the valve.

SERVICE DIAGNOSIS: Condition - No Ice Being Produced

STATUS: *GEARMOTOR OPERATES, COMPRESSOR DOES NOT*

B. Check the **compressor relay.**

The relay is on the circuit board, if it does not supply power to the liquid line valve coil, the low pressure control will not close, and the compressor will not run.

1. Check for power at the liquid line valve coil, if none:
   a. Check for power at the compressor relay at the circuit board. If there is power at the relay, but none at the coil,
      Check for an open wire between the relay and the coil.
2. Check the coil. If the coil is open, replace the liquid line valve.
3. Check the auger drive motor centrifugal switch. If, when the drive motor is running, contact 4 (black wire removed) has no power, and all of the above switches have been checked, replace the centrifugal switch, or the drive motor.
4. If the compressor relay on the circuit board has power on the NO contact, but not on the COM contact, replace the circuit board.

C. Check the **compressor contactor**.

1. If the liquid line valve is open, and the gearmotor is running, the low pressure control shoud be closed, and the compressor contactor should be energized. If not:
   a. Check for power at the gearmotor terminal to the contactor, if none:
      Replace the drive motor or the centrifugal switch in the drive motor.
   b. Check for power at the high pressure control, if none, check that control.
   c. Check the coil of the contactor, if open, replace the contactor.

D. Check the **compressor**

1. Check for power at the compressor: check the start relay, and start capacitor.
2. Check the windings of the compressor for open windings or shorts to ground.

Replace those items found defective.

NM1250R

SERVICE DIAGNOSIS: Condition - Low Ice Production

I. STATUS: *EVERYTHING IS OPERATING*

A. Check the condenser for dirt. Clean as required. Check the head pressure. If the head pressure is very high:

1. Check for high air temperatures, or restrictive air flow. Correct as needed.
2.. The refrigerant may contain non condensable gases, purge, evacuate, and recharge per nameplate.
3. Check the interconnecting refrigerant tubing for kinks or twists. Check that the discharge and liquid lines are insulated, and do not touch each other where not insulated.

B. Check the evaporator

1. Clean the evaporator, the mineral build up will adversely affect the ice machines production.
2. Check the evaporator for water leaks, replace the water seal if found to be leaking.
3. Check the low side pressure; normal is about 30 psig. If low, assume a refrigerant leak, locate, repair and recharge.

   If no leak, the TXV may be restricted, defective or not adjusted properly. If needed, replace the TXV, evacuate, and recharge per nameplate.
4. Check the insulation on the evaporator. It should be dry, with no wet spots or frost. If the insulation has failed: replace the evaporator or add extra insulation in the form of foam tape to the evaporator.

C. Check the compressor

1. The compressor may be inefficient.

   a. Check the amp draw, if low change the compressor.

   b. if the amp draw is normal, pinch off the suction line to check the pull down capability of the compressor. The compressor should pull down to 25 inches of vacuum and hold there for three to five minutes.

D. Refrigerant charge

On this model the refrigerant charge is adequate whenever the receiver has enough liquid refrigerant to maintain liquid refrigerant at the TXV. HOWEVER, the condensing temperature will have a definate bearing on this. A unit with a marginal charge in summer, will be **undercharged** when the outside air temperature drops. The only correct way to charge this unit is to weigh in the nameplate charge.

REMOVAL AND REPLACEMENT

WATER RESERVOIR

1. Shut off the water supply to the icemaker.
2. Remove front panel and reservoir cover.
3. To remove float only, pry the mounting flanges apart enough to lift one float pivot pin out of the flange hole, and pull float up and out of the reservoir.
4. To remove reservoir, disconnect water inlet compression fitting at reservoir inlet.
5. Remove drain hose from reservoir.
6. Remove evaporator inlet hose from reservoir.
7. Remove mounting screws from reservoir bracket, and remove reservoir from icemaker.
8. Reverse to reassemble.

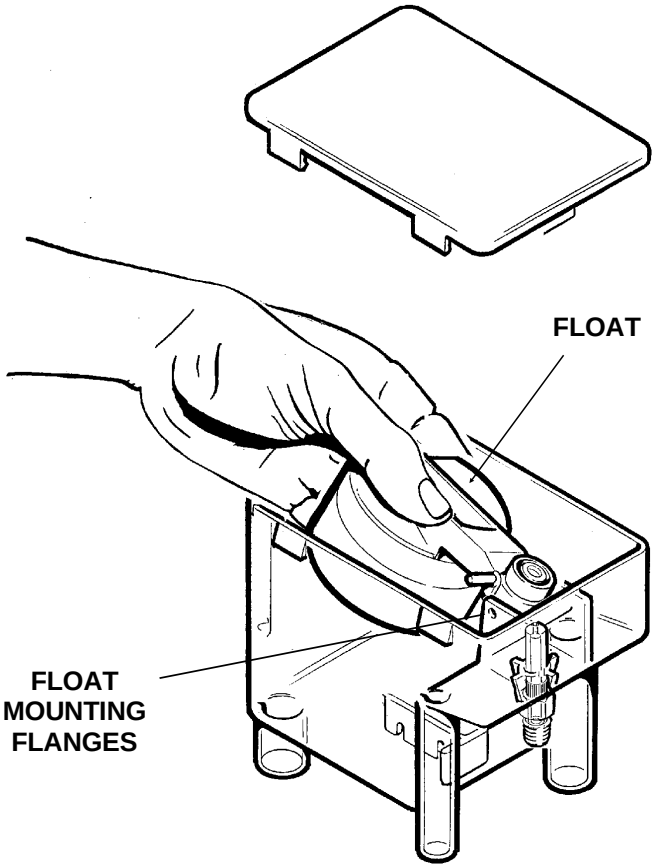

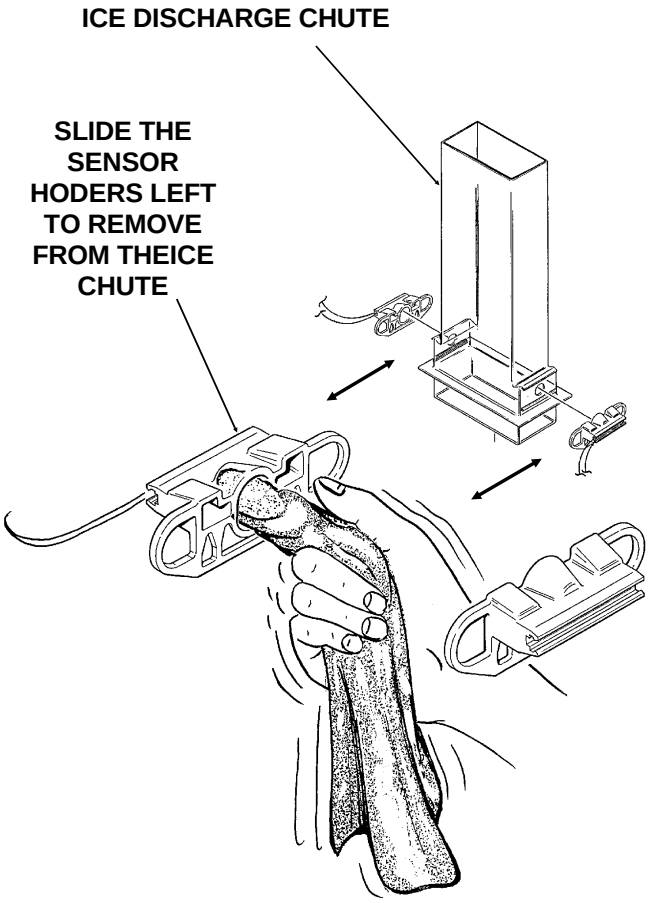

BIN CONTROLS (Ice Level Sensors)

1. Disconnect electrical power.
2. Remove front panel.
3. Remove control box cover.
4. Locate ice chute, at the base of the chute, in front of and behind it are two plastic bin control mounts.
5. Slide each bin control to the left, and in the control box, disconnect the electrical leads connecting the bin control to the circuit board.
6. Reverse to reassemble, be certain that the bin controls are aligned so that the ice level sensors are visible (centered) through the holes in the cube chute.

REMOVAL AND REPLACEMENT: Bearing And Breaker

Note: Removal of the auger, water seal, evaporator and gearmotor must begin at the top of the assembly.

To Remove the Breaker Bearing Assembly:

////////////////////////////WARNING////////////////////////////

Disconnect the electrical power to the machine at the building source BEFORE proceeding with any repair.

//

1. Remove panels and disconnect electrical power.

2. Unscrew three studs and remove ice chute cover.

3. Unscrew and remove ice sweep.

4. Remove insulation halves from outside of ice chute, loosen band clamp under ice chute, lift up and remove ice chute.

5. The breaker may be removed from the auger and evaporator without disturbing the auger.

a. Use spanner wrench and unscrew breaker cover from breaker (left hand threads)

b. Unscrew auger stud from top of auger.

c. Unscrew 4 allen head cap screws holding breaker to evaporator.

d. Lift up, and remove breaker/bearing assembly from auger & evaporator.

6. Service the bearing. Check for rust, rough spots and damage.

a. The bearing is pressed into the breaker, to remove the bearing and replace it an arbor press is needed.

b. Replace lower seals before installing new bearing in breaker.

Note: seals must be pressed in with a tool pushing against the outer edge only, they will not install by hand.

Replace parts as required. Re-grease bearing with Scotsman part no. 19-0609-01 bearing grease. Replace top seal, and check the o-rings, replace if cut or torn.

7. Reverse to reassemble: specific tools and materials are required to install properly.

a. Add food grade grease such as Scotsman part number 19-0569-01 to the seal area before installing on the auger.

b. Check the seal to shaft areas for cuts, or rough spots: none are permitted.

Step 5-a

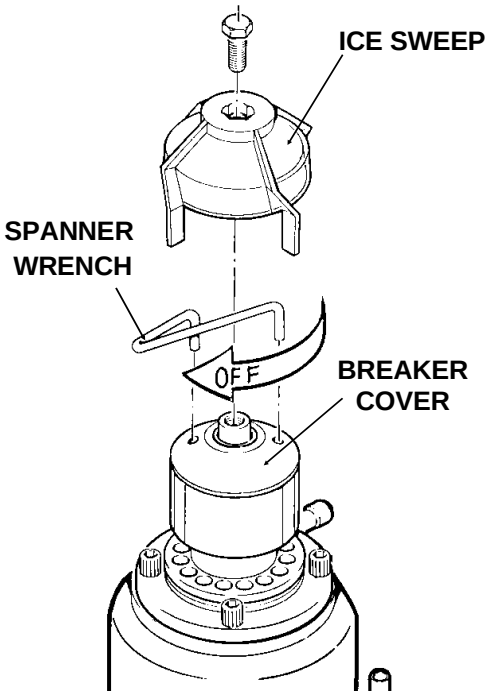

Step 5-b

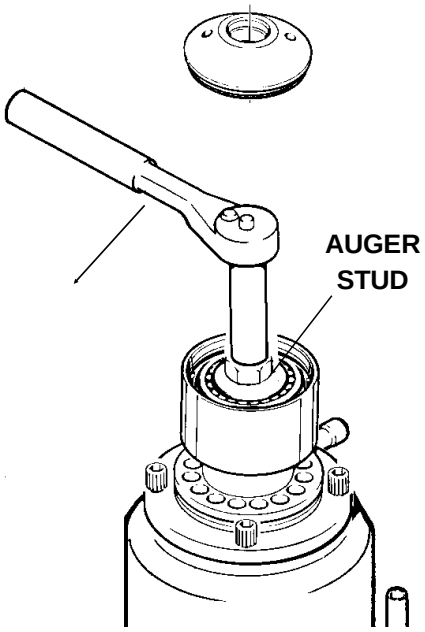

Step 5-c & Step 6

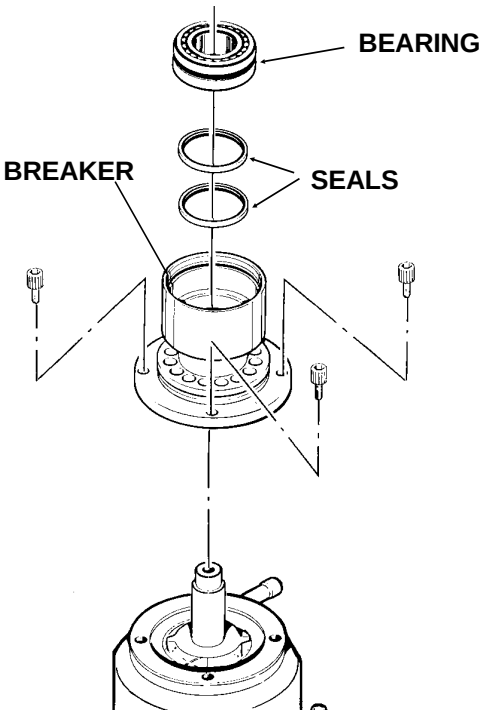

REMOVAL AND REPLACEMENT: Auger

To Remove the Auger:

Turn off the water to the machine, and unclip the evaporator drain hose, pull it down and drain the evaporator into the bin or a container.

1. The top panel must be removed, or, if that is not possible, the gearmotor and freezer assembly must be pulled part of the way out from the cabinet. To do that:

a. Unclip the electrical wires from the hanger near the drive motor.

b. Remove the bolt holding the gearmotor plate.

c. Pull the assembly out.

2. The auger and breaker/bearing may now be removed as an assembly.

a. Unscrew 4 allen head cap screws holding breaker to evaporator.

b. Lift up on breaker and remove auger from evaporator.

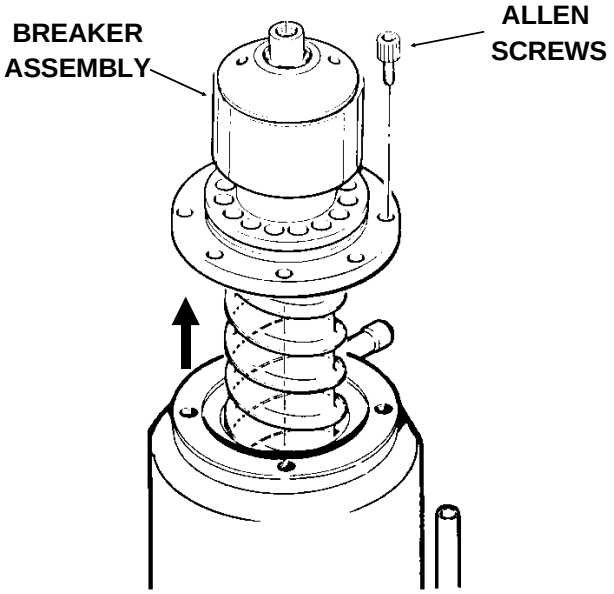

Note: If the auger is stuck, the breaker must be removed from the auger.

The breaker may be removed from the auger and evaporator without disturbing the auger.

a. Use spanner wrench and unscrew stainless breaker cover from breaker (left hand threads)

b. Unscrew auger stud from top of auger.

c. Unscrew 4 allen head cap screws holding breaker to evaporator.

d. Use a slide hammer type puller to pull on the auger at the threaded hole. The size of that hole is 5/8"-18.

Inspect the auger, the critical areas of the auger are:

a. The auger body. It should be clean and shining. Sometimes an auger will appear clean when wet, but after it is dry it will be seen to be stained. Scrub the auger with ice machine cleaner and hot water.

////////////////////////WARNING////////////////////////////

Ice machine cleaner is an acid. Handle it with extreme care, keep out of the reach of children.

//

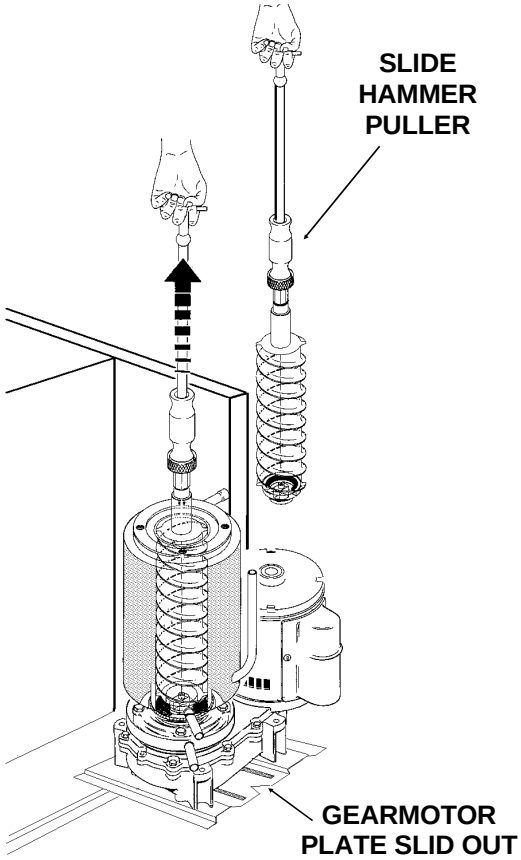

b. The water seal area. Because the auger has been removed, the water seal will have to be replaced. Remove the water seal top half from the auger, and inspect the auger for minerals clean as required.

REMOVAL AND REPLACEMENT: Evaporator & Water Seal

To Remove the Water Seal:

(Assuming all steps to remove the auger have been performed.)

1. The gearmotor/evaporator assembly will have to be pulled away from the machine (if not yet done).

2. Remove the 4 hex head cap screws holding the evaporator to the gearmotor assembly. Lift the evaporator up and off of the gearmotor.

3. Remove the snap ring or wire retainer from the grove under the water seal.

4. Pull or drive out the lower half of the water seal.

To Replace the Water Seal:

1. Lubricate the water seal with water, and push the water seal into the bottom of the evaporator slightly past the grove for the snap ring.

2. Replace the snap ring and pull the water seal down against it.

3. The part of the water seal that rotates with the auger must also be replaced. Remove the old part from the auger and clean the mounting area.

4. Place a small bead of food grade silastic sealant (such as 732 RTV or Scotsman part number 19-0529-01) on the area of the auger where the water seal is to be mounted.

5. Carefully push the water seal (rubber side against the auger shoulder and the silastic.)

////////////////////////////CAUTION////////////////////////////

Do not get any silastic onto the face of the seal.

//

6. Allow the auger and seal to air dry until the silastic is dry on the surface.

7. If the original water seal was leaking, it would be a good idea to inspect the interior of the gearmotor.

To Replace the Evaporator:

(Assuming all the steps for removal of the thrust bearing, breaker, auger, and water seal have been performed.)

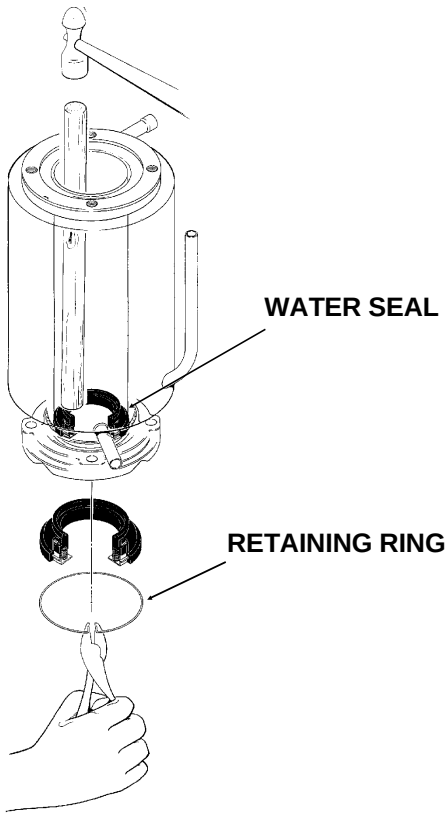

1. Discharge the refrigerant from the ice maker.

2. Unsweat the refrigerant connections:

a) At the thermostatic expansion valve outlet.

////////////////////////////////CAUTION////////////////////////////////

Heat sink the TXV body when unsweating or resweating the adjacent tubing.

//

b) At the suction line at the joint about 3" from the evaporator.

3. Remove the evaporator.

4. Unsweat the drier from the liquid line.

5. After installing a new water seal in the new evaporator (see "To Replace the Water Seal") resweat the tubing connections.

6. Install an new drier in the liquid line.

7. Evacuate the system until dehydrated, then weigh in the nameplate charge. Check for leaks.

8. Install auger, breaker, breaker bearing assembly, and ice discharge chute in reverse order of disassembly. See "To Reassemble Evaporator and Auger"

REMOVAL AND REPLACEMENT: Evaporator

To Reassemble the Evaporator and Auger

1. After the gearmotor has been inspected, fasten the evaporator to the gear motor, be sure that the number of shims indicated on the gear case cover is in place between the gearcase cover and the drip pan gasket. Torque the bolts to 110 inch pounds.
2. Lower the auger into the evaporator barrel, slightly turning it to match up with the drive end. Do Not Drop Into the Evaporator.
3. Complete the reassembly by reversing the disassembly for the breaker & thrust bearing assembly.

Head Pressure Control Valve

1. Purge system of refrigerant.
2. Break off process tube on the top of the OLD head pressure control valve.
3. Unsweat old valve from tubing.
4. Unsweat old dryer from tubing.
5. Install new valve in place. Check for correct connections and be sure that the number on the side of the valve is "220".
6. Wrap the new valve body in wet cloths to heat sink the valve body.
7. Sweat in the new valve and the new dryer.

REPLACING THE WATER SEAL

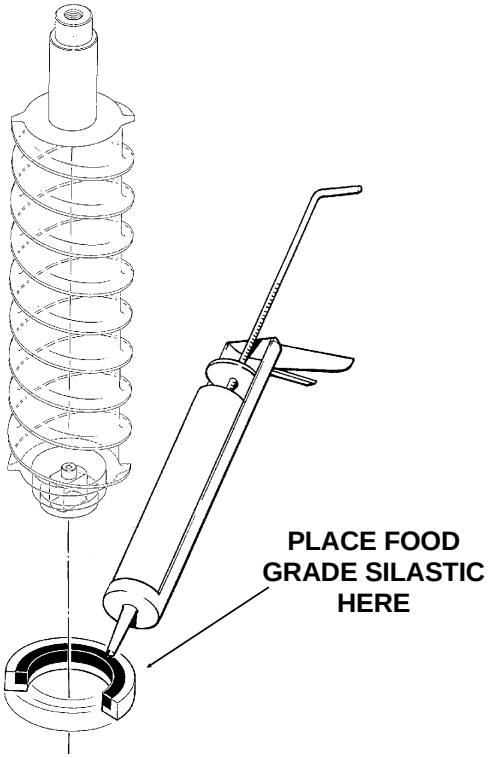

8. Evacuate the system, and weigh the nameplate charge into the receiver.

CHARGING PROCEDURES

Extra care must be taken when recharging this remote system. No liquid refrigerant maybe placed in the system at the compressor. DO NOT use the schrader valves at the front of the unit for weighing in the charge. All liquid refrigerant must be weighed into the receiver through the "front seated" king valve.

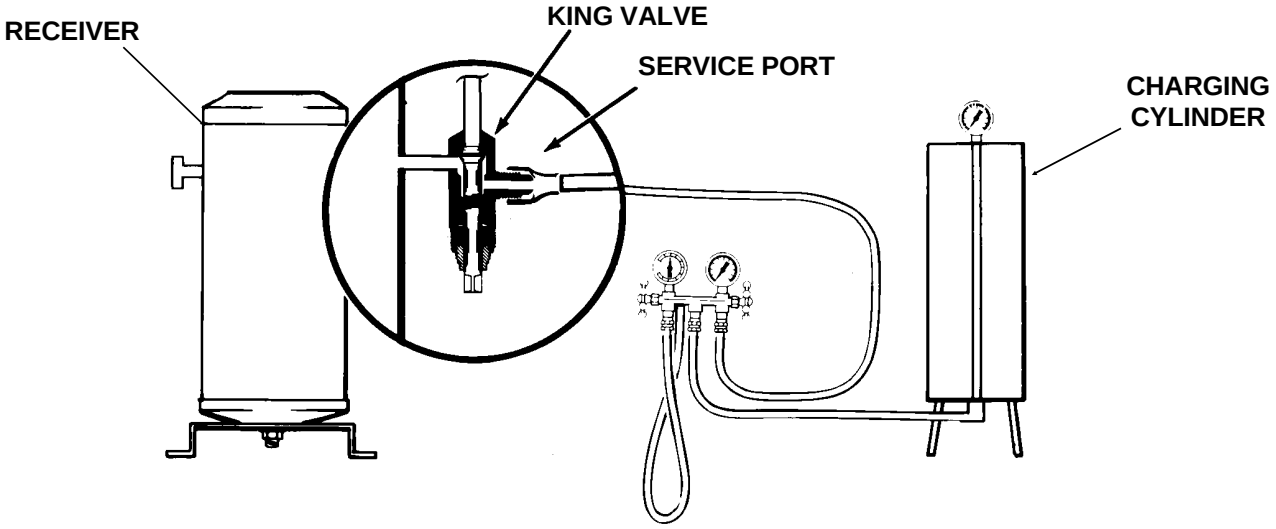

To Remove and Repair the Gearmotor Assembly:

(Assuming that the procedures through removal of the water seal have been performed.)

1. Remove the electrical wires from the gear drive motor.
2. Unscrew the 4 cap screws holding the gearmotor to the gearmotor plate.
3. Remove the gearmotor from the icemaker.

To Inspect the gearmotor.

A) Remove the cap screws holding the gearmotor case halves together and pry the two cases apart.

B) To lift off the cover, lift up until you can feel internal contact, then pull the cover towards the output gear end, and then lift the cover (with drive motor attached) up and away from the gear motor case.

Note: The case cover output gear, bearings, and shaft are one pressed together assembly. Replace as a unit.

C) Inspect the oil, gears, and bearings. If the oil level and condition is acceptable, quickly check the gears and bearings. They are likely to be fine if the oil is.

If there is evidence of water in the oil (rusty bearings and gears; the oil having a creamy white appearance; oil level too high) carefully inspect the bearings and gears. If in doubt about the condition of a part, replace it. The oil quantity is 14 fluid ounces, do not overfill.

Note: The gears and bearings are available only as pressed together sets.

D) After replacing parts as required, (if any) reassemble the gearcase. The two smaller gears and the oil should be in the lower case, the output gear will be with the cover. As you lower the cover onto the lower case, cover will have to be moved closer to the second gear after the output gear has cleared the second gear top bearing.

E) After the case is together, and the locating pins are secure in both ends, replace all cap screws.

Note: If the gearcase cover was replaced, the replacement part was shipped with a certain number of shims. The number of shims used **must** match the number on the gearcase cover. Do not use the old shims unless there is a shortage.

4. Bench test the gearmotor, check for oil leaks, noise, and amp draw.

REMOVAL AND REPLACEMENT: Gearmotor

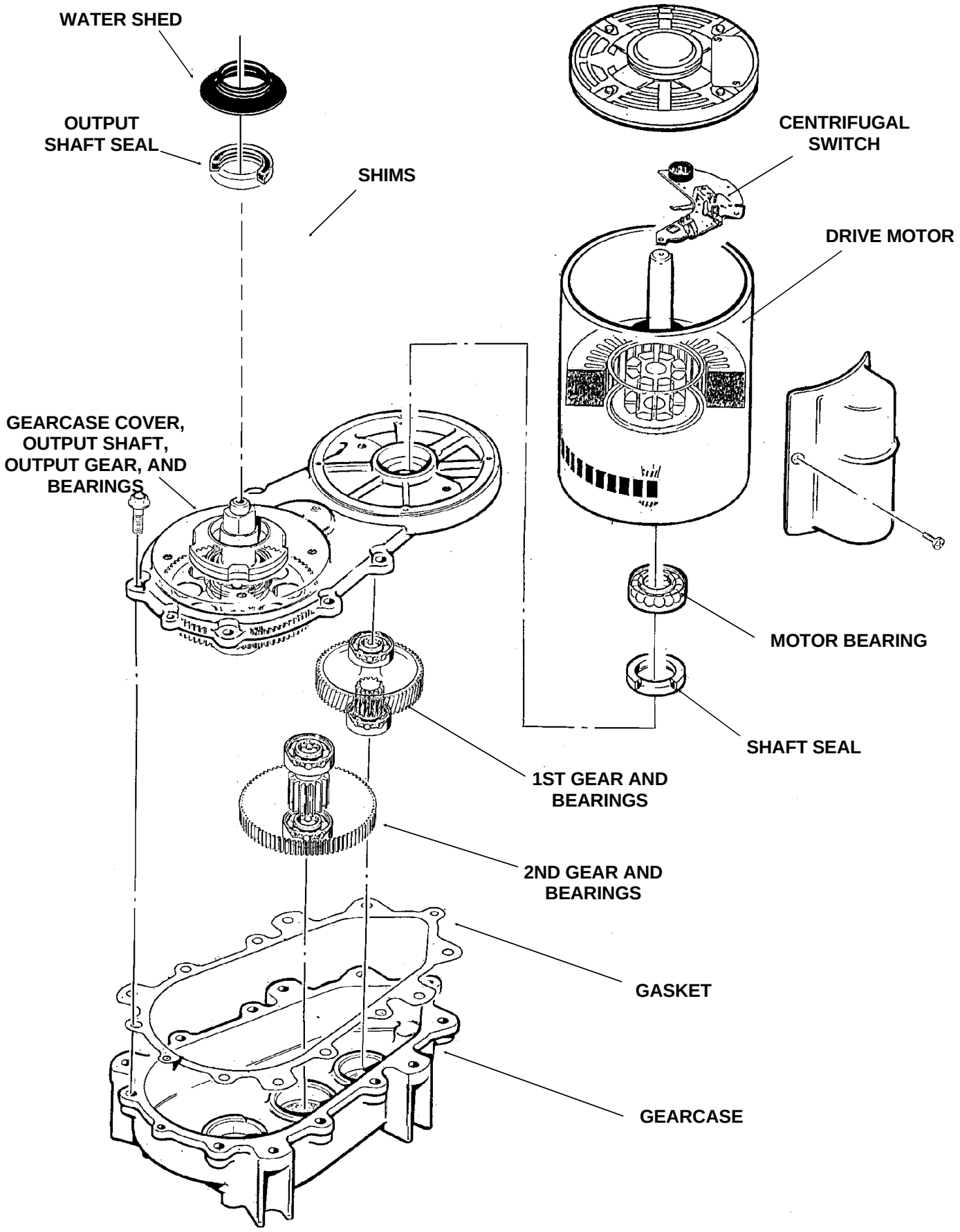

NM1250R

ELECTRONIC CONTROL TESTER

INSTRUCTIONS FOR USING TESTER MODEL FC1

(Optional, order part no. A33942-001)

(These instructions assume that the unit will not run, and prior investigation of electric power, controls, and mechanical parts indicates that the electronic circuit may be at fault.)

//WARNING//

These procedures require the machine to be connected to the power supply. The voltages of the electronic circuit are very low, but HIGHER VOLTAGES ARE PRESENT IN THE UNIT. Do not touch anything but the tester while the unit is being checked out. Make all connections to the circuit board with the ELECTRICAL POWER OFF.

//

ELECTRONIC CONTROL TESTER

Water Level

1. Unplug "water sen" connector from control board.

2. Plug "water sen" connector from Scotsman tester into circuit board.

a. Move "water" switch on tester to No Water position. The No Water light on the circuit board should go ON. If not, replace the circuit board.
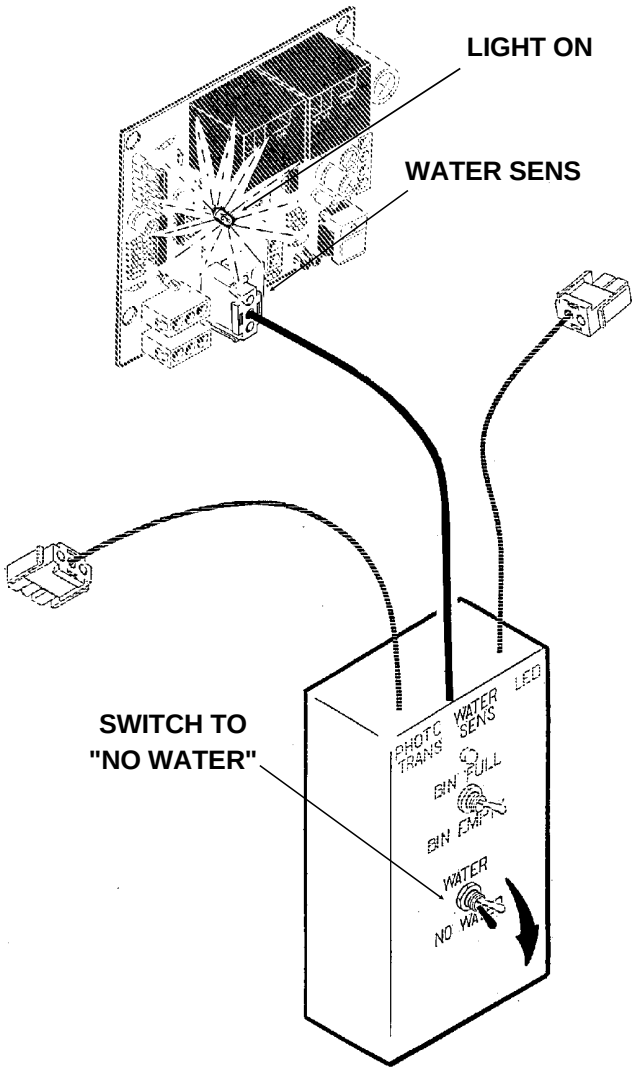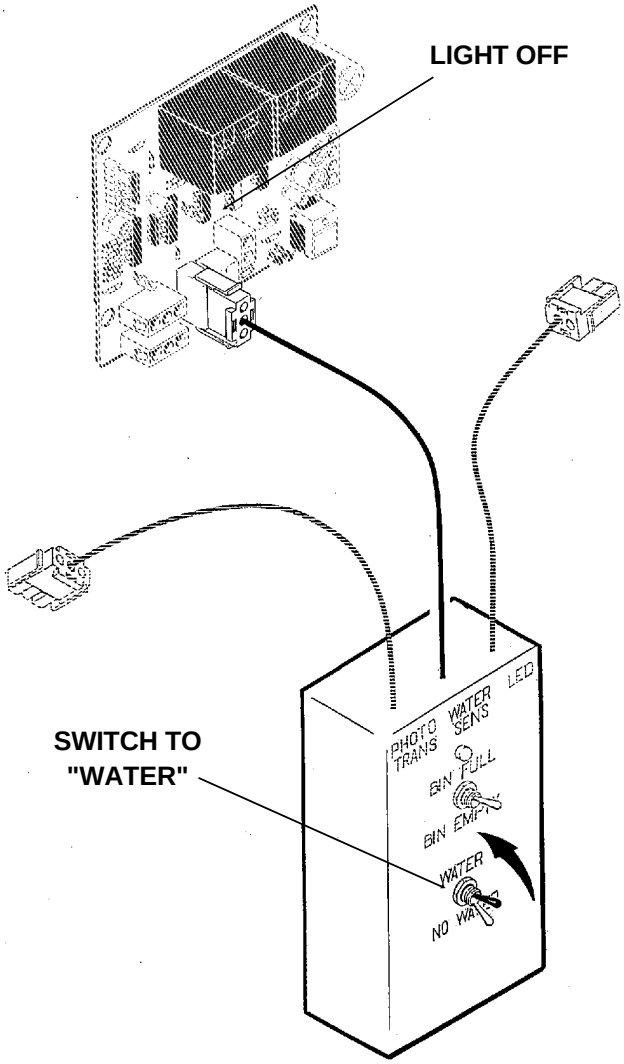
b. Move the "water" switch on the tester to the Water position. The No Water light on the board should go OFF. If not replace the circuit board. If the light does go off, replace the water level sensor.