NDE554 & NDE654 SERVICE PARTS

This parts list contains the service parts and wiring diagrams for this model. Check the model number of the machine requiring the parts to be sure that this is the correct parts list.
NDE554s and NDE654s have been made in 115 volt, 60 Hz and 230 volt 50 Hz.
Model numbers for the 115 volt models include:
NDE554AE-1A and NDE554WE-1A
NDE654AE-1A and NDE654WE-1A
Model numbers for the 230 volt models include:
NDE554AE-6A and NDE554WE-6A
NDE654AE-6A and NDE654WE-6A

Note: The liquid line filter drier listed in this parts list is designed for this refrigeration system. Premature failure may result if the wrong drier is used.

Table Of Contents

NDE554 Cabinet . . . . . Page 2

NDE654 Cabinet . . . . . Page 3

Air Cooled Refrigeration . . . . . Page 4

Water Cooled Refrigeration . . . . . Page 5

Water and Ice Dispensing . . . . . Page 6

Evaporator . . . . . Page 7

Reservoir and Water Drain System . . . . . Page 8

Gearmotor Assembly . . . . . Page 9

Control Box . . . . . Page 10

Wiring Diagrams . . . . . Page 11

NDE554 & NDE654 SERVICE PARTS

NDE554 Cabinet

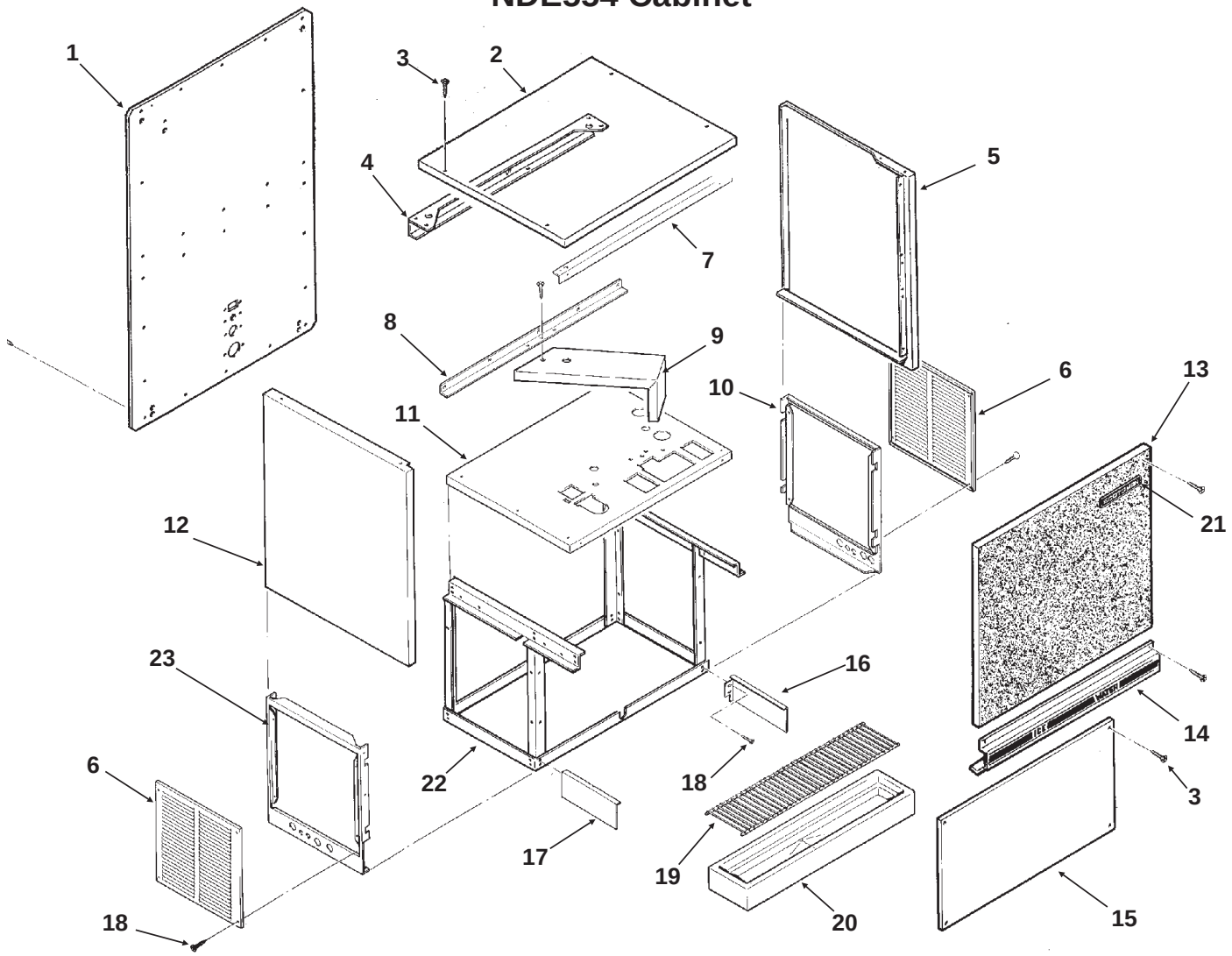

ITEM NUMBER	PART NUMBER	DESCRIPTION
1	A32954-002	Back Panel, stainless
2	A32948-002	Top Panel, stainless
3	03-1419-16	Panel screw
4	A32938-015	Hanger Brace - gray
5	A32947-004	Rt. side panel, stainless
6	A33113-002	Service panel, stainless
7	A32939-015	Front brace
8	A32940-015	Support angle
9	A32949-015	Gearmotor Support
10	A32953-002	Rt. side lower, stainless

ITEM NUMBER	PART NUMBER	DESCRIPTION
11	A32956-015	Upper plate assembly gray
12	A32947-002	Left side panel, ss
13	A34393-001	Up front panel, stainless
14	A33198-001	Control panel assembly
14a	15-0672-01	Ice & Water Decal
15	A32944-001	Lower front panel
16	A34917-015	RH sink support
17	A34917-015	LH sink support
18	03-1405-17	Screw
19	02-2951-01	Grill
20	02-2944-02	Sink, gray
21	15-0711-02	Emblem
22	A32958-001	Lower frame assy
23	A32952-002	Lt side lower, stainless

NDE554 & NDE654 SERVICE PARTS

NDE654 Cabinet

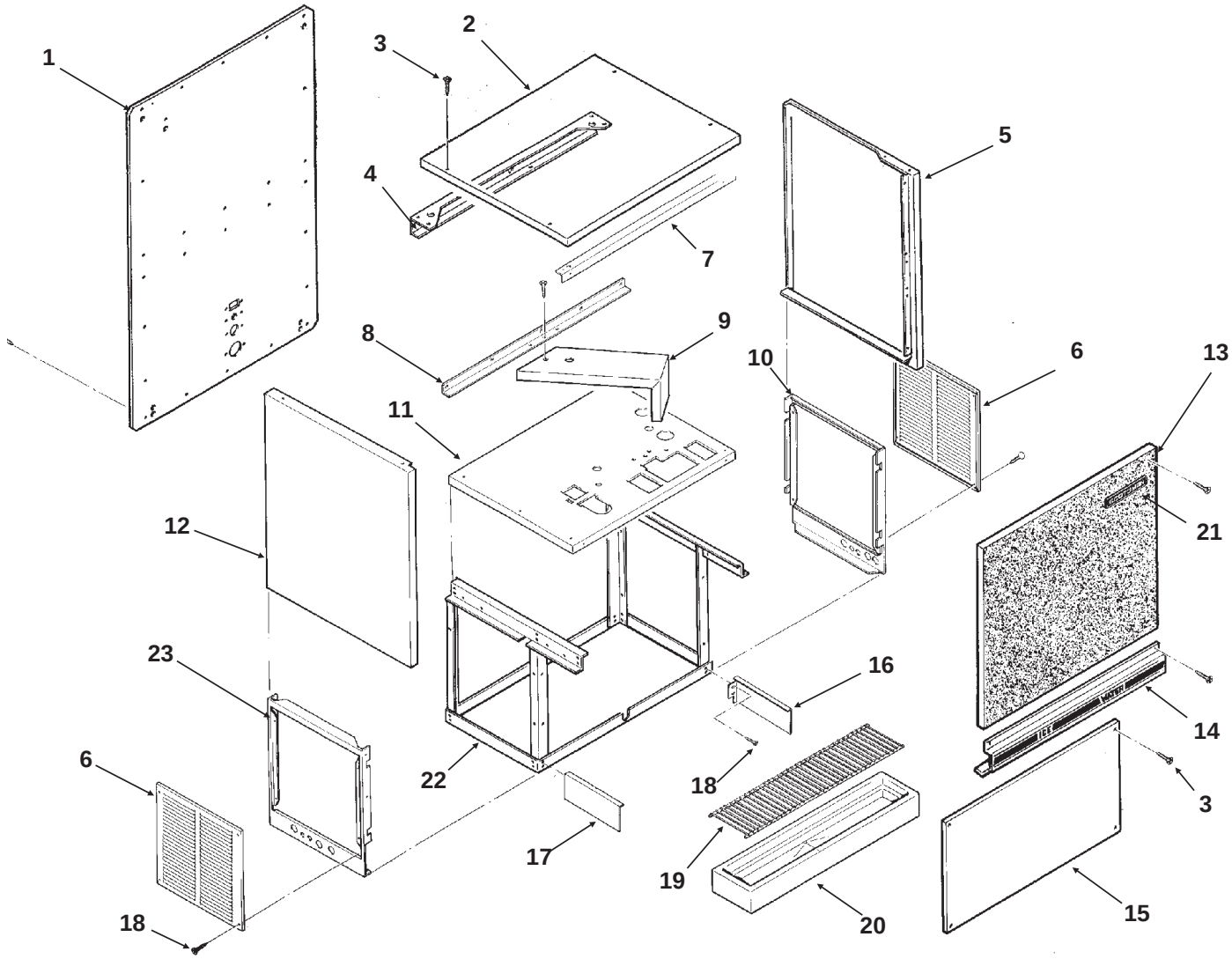

ITEM NUMBER	PART NUMBER	DESCRIPTION
1	A33112-002	Back Panel, stainless
2	A32948-002	Top Panel, stainless
3	03-1419-16	Panel screw
4	A32938-015	Hanger Brace gray
5	A33109-004	Rt. side panel, stainless
6	A33113-002	Service panel, stainless
7	A32939-015	Front Brace gray
8	A32940-015	Support angle gray
9	A33107-015	Gearmotor Support gray
10	A32953-002	Rt. side lower, stainless

ITEM NUMBER	PART NUMBER	DESCRIPTION
11	A32956-015	Upper plate assembly
12	A33109-002	Left side panel, ss
13	A34394-001	Up front panel, stainless
14	A33198-001	Control panel assembly
14a	15-0672-01	Ice & Water Decal
15	A32944-001	Lower front panel
16	A34917-015	RH sink support
17	A34917-015	LH sink support
18	03-1405-17	Screw - Hex cap
19	02-2951-01	Grill
20	02-2944-02	Sink, gray
21	15-0711-02	Emblem
22	A32958-001	Lower frame assy
23	A32952-002	Lt side lower, stainless

NDE554 & NDE654 SERVICE PARTS
Air Cooled Refrigeration

ITEM NUMBER	PART NUMBER	DESCRIPTION
1	A32961-020	Insulation Kit (3 piece)
2	11-0488-21	Thermo Expansion Valve
3	11-0501-22	Hi Press. Cut Out
4	16-0832-20	Access valve
	16-0832-02	Stem cap
	16-0832-20	Access valve
5	no number	Suction line
6	18-8720-21	Compressor, 115v, 60 Hz
	18-5700-50	Overload for 115v comp.
	18-8720-26	Compressor, 230v, 50 Hz
	18-5700-55	Overload for 230v comp.
7	03-1406-10	Hex nut
8	02-3319-02	Dryer
9	18-2200-27	Mounting Sleeve
10	18-2200-28	Mounting Grommet
11	18-8736-02	Fan Motor, 115v 60 Hz
	18-8736-03	Fan motor, 230v, 50 Hz
12	02-3359-01	Fan motor bracket; mounts to condenser shroud.
13	11-0502-21	Low Pressure Cont.
14	18-8738-01	Fan Blade
15	A33110-015	Fan Shroud gray
16	18-8847-01	Condenser
17	03-1645-01	Screw

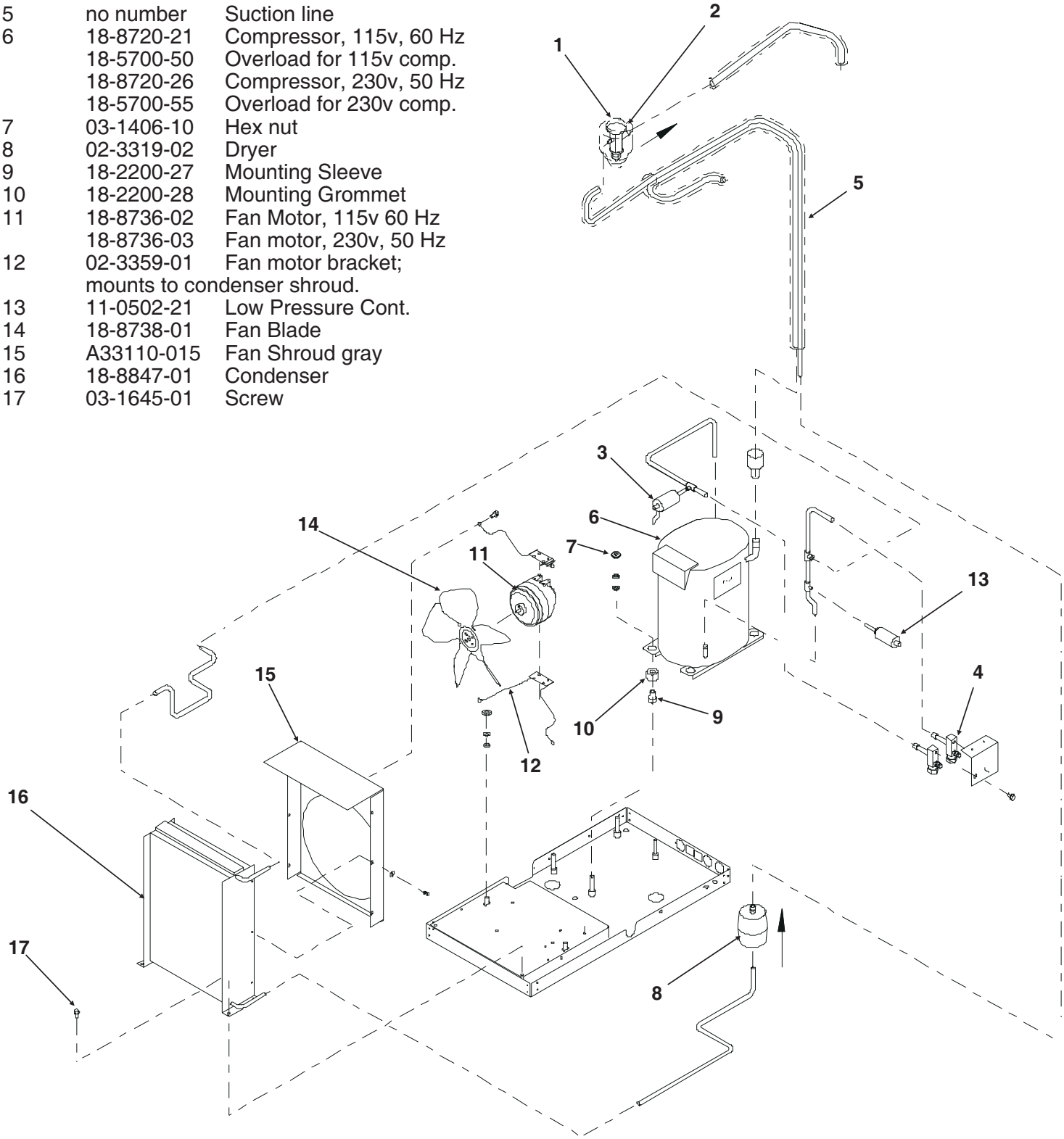

NDE554 & NDE654 SERVICE PARTS
Water Cooled Refrigeration

ITEM NUMBER	PART NUMBER	DESCRIPTION
1	A32961-020	Insulation Kit (3 piece)
2	11-0488-21	Thermo Exp. Valve
3	A31828-002	Adaptor Flange
4	18-3305-25	Condenser
5	03-1405-17	Screw
6	02-3319-02	Dryer
7	03-1406-10	Hex Nut
8	18-2200-27	Mounting Sleeve
9	18-2200-28	Mounting Grommet
10	18-8720-21	Compressor, 115v 60 Hz
	18-5700-50	Overload for 115v comp.
	18-8720-26	Compresor, 230v, 50 Hz
	18-5700-55	Overload for 230v comp.
11	16-0832-20	Access valve
12	11-0501-22	High Press. Cut Out
13	11-0478-21	Water Reg. Valve
14	11-0502-21	Low Press. Control
15	A31828-001	Adaptor Flange

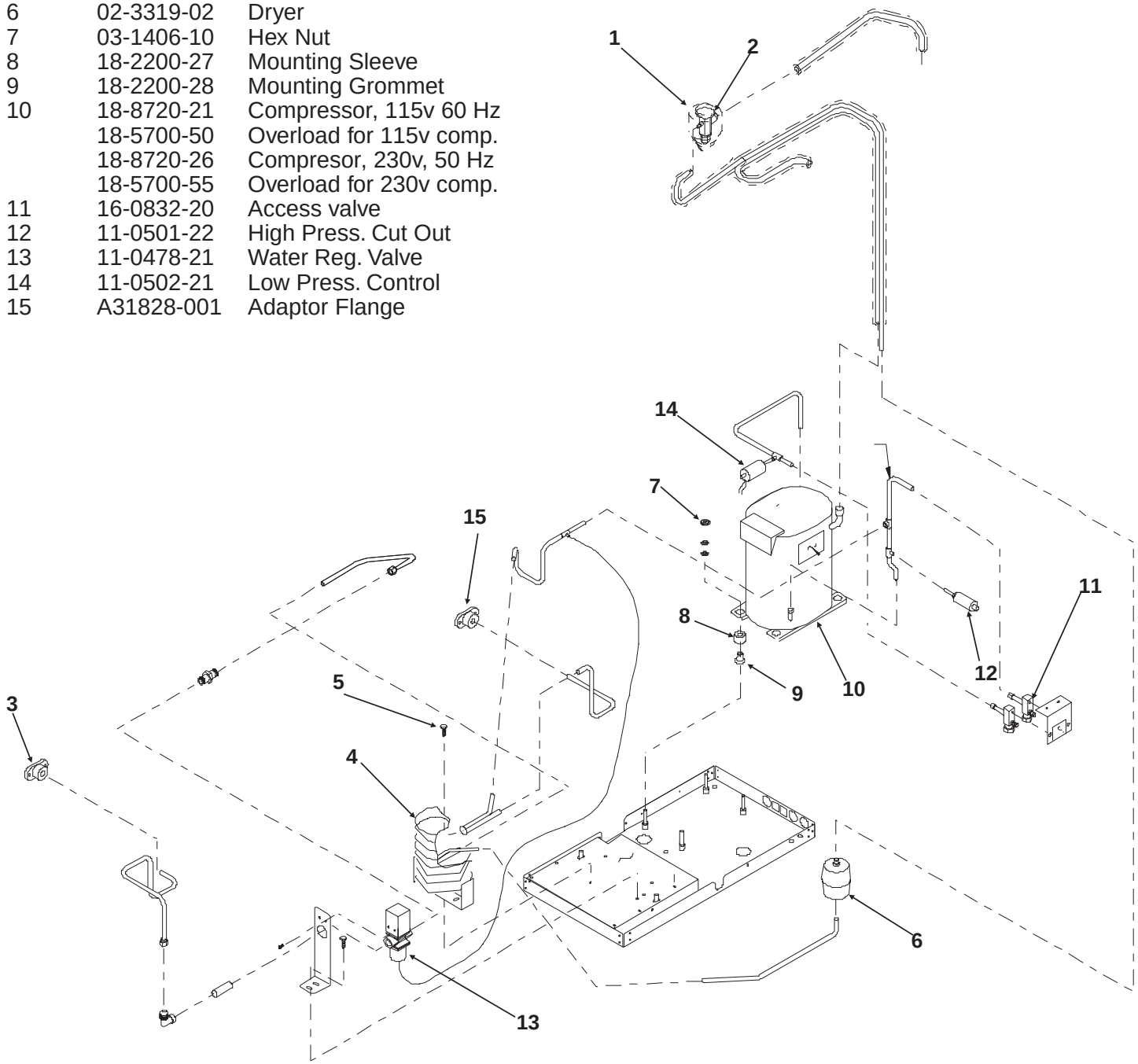

NDE554 & NDE654 SERVICE PARTS
Water and Ice Dispensing

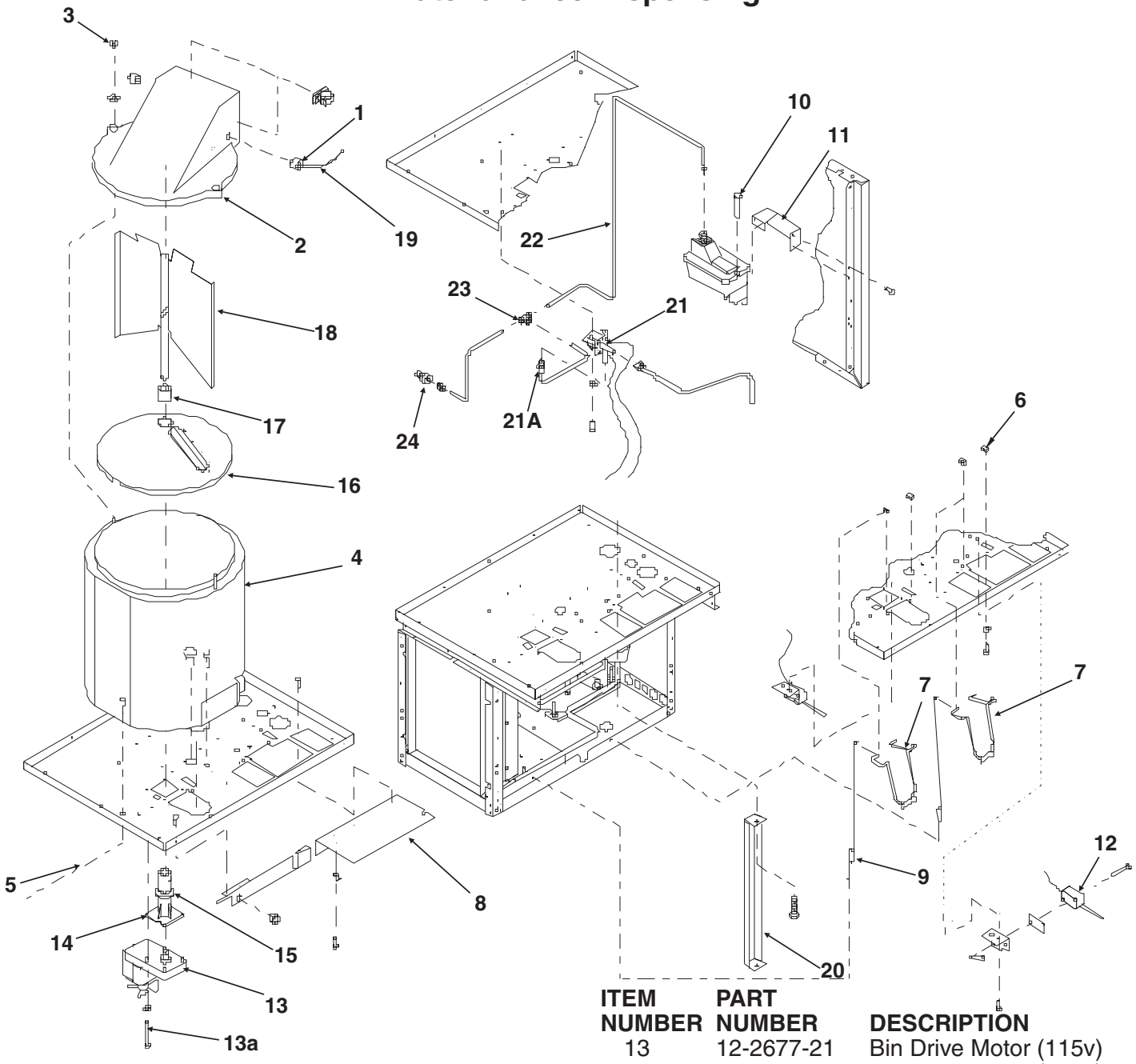

ITEM NUMBER	PART NUMBER	DESCRIPTION
1	13-0866-01	Grommet, Bin Control
2	A34493-003	Bin top
3	03-0255-00	Wing Nut
4	**A34496-001**	**Storage Bin NDE554**
	A34496-002	**NDE654 Storage Bin**
5	03-1406-09	Hex nut
	03-1410-03	Lock washer
6	02-2950-01	Arm Clamp
7	02-3167-01	Glass Filler Lever
8	A33348-015	Control Panel
9	02-3022-01	Spring
10	12-2760-21	Water sensor
11	A35768-001	Reservoir bracket
12	**12-2409-01**	**Microswitch**

ITEM NUMBER	PART NUMBER	DESCRIPTION
13	12-2677-21	Bin Drive Motor (115v)
	12-2677-26	Bin Drive Motor (230v)
13a	03-1403-36	Screw
14	02-1971-00	Bracket
15	13-0747-00	Water Shed
16	A32657-001	Bin Bottom
17	02-3327-01	Bearing
18	**A37267-001**	**NDE654 Bin vane (w/#17)**
	A37268-001	**NDE554 Bin vane (w/#17)**
19	A37710-021	Ice Level Sensor
20	A34818-015	Support
21	12-1646-01	60 Hz water valve
	12-1646-06	50 Hz water valve
21a	16-1046-01	Water line connector
22	13-0895-01	Poly tubing, 64 in req.
23	16-1040-01	Tee
24	16-0835-01	Inlet fitting

NDE554 & NDE654 SERVICE PARTS

Evaporator

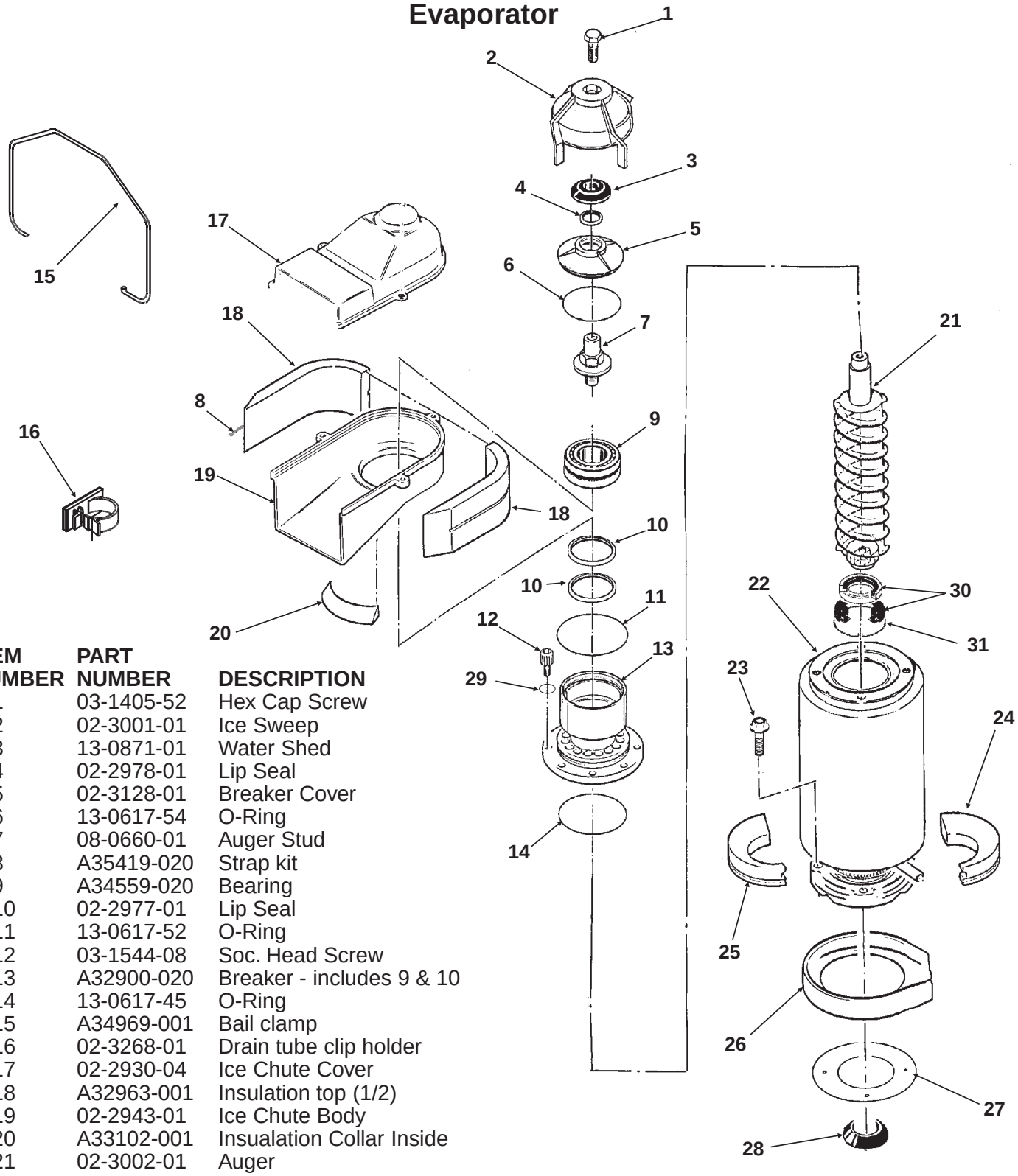

ITEM NUMBER	PART NUMBER	DESCRIPTION
1	03-1405-52	Hex Cap Screw
2	02-3001-01	Ice Sweep
3	13-0871-01	Water Shed
4	02-2978-01	Lip Seal
5	02-3128-01	Breaker Cover
6	13-0617-54	O-Ring
7	08-0660-01	Auger Stud
8	A35419-020	Strap kit
9	A34559-020	Bearing
10	02-2977-01	Lip Seal
11	13-0617-52	O-Ring
12	03-1544-08	Soc. Head Screw
13	A32900-020	Breaker - includes 9 & 10
14	13-0617-45	O-Ring
15	A34969-001	Bail clamp
16	02-3268-01	Drain tube clip holder
17	02-2930-04	Ice Chute Cover
18	A32963-001	Insulation top (1/2)
19	02-2943-01	Ice Chute Body
20	A33102-001	Insualation Collar Inside
21	02-3002-01	Auger
22	A33194-020	Evaporator
23	03-1420-03	Screw
24	A32962-001	Insulation (1/2)
25	A32962-002	Insulation (1/2)
26	02-3837-01	Drip Pan
27	13-0704-00	Drip Pan Gasket
28	13-0868-01	Water Shed
29	03-1408-26	Washer
30	02-0929-03	Water Seal
31	A32777-001	Retaining Ring

Note: The bottom half of Item 30 and item 31 install from below item 22.

NDE554 & NDE654 SERVICE PARTS
Reservoir and Water Drain System

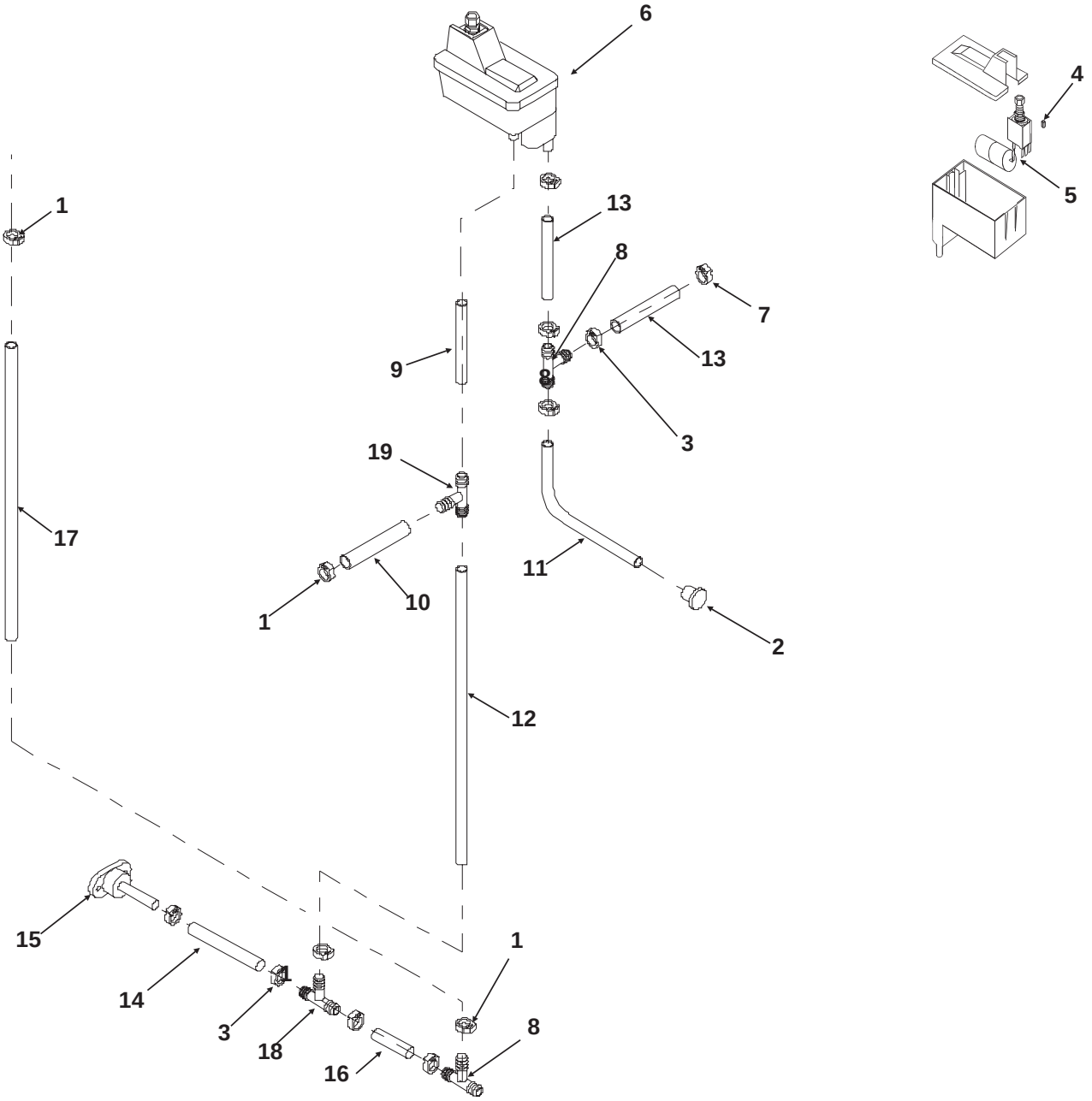

ITEM NUMBER	PART NUMBER	DESCRIPTION
1	02-2814-08	Clamp
2	13-0840-01	Plug
3	02-2814-07	Clamp
4	02-3266-22	Plunger/seat
5	02-3266-21	Float valve
6	02-3266-20	Reservoir Assy, complete
7	13-0674-06	Tubing, requires 4.5"
8	16-0670-01	Tee
9	13-0079-03	Tubing, requires 6"
10	13-0079-03	Tubing, requires 4.5"

ITEM NUMBER	PART NUMBER	DESCRIPTION
11	13-0674-06	Drain Tube, req. 23"
12	13-0079-03	Drain Tube, req. 36"
13	13-0674-06	Evap. Inlet Tube, req 5"
14	13-0079-01	Drain Tube, req. 6.5"
15	02-3692-01	Drain Casting
16	13-0079-01	Drain Tube, req. 2.5"
17	13-0079-01	Bin Drain Tube, req. 15"
18	16-0670-04	Tee
19	16-0670-02	Tee

NDE554 & NDE654 SERVICE PARTS
Gearmotor Assembly

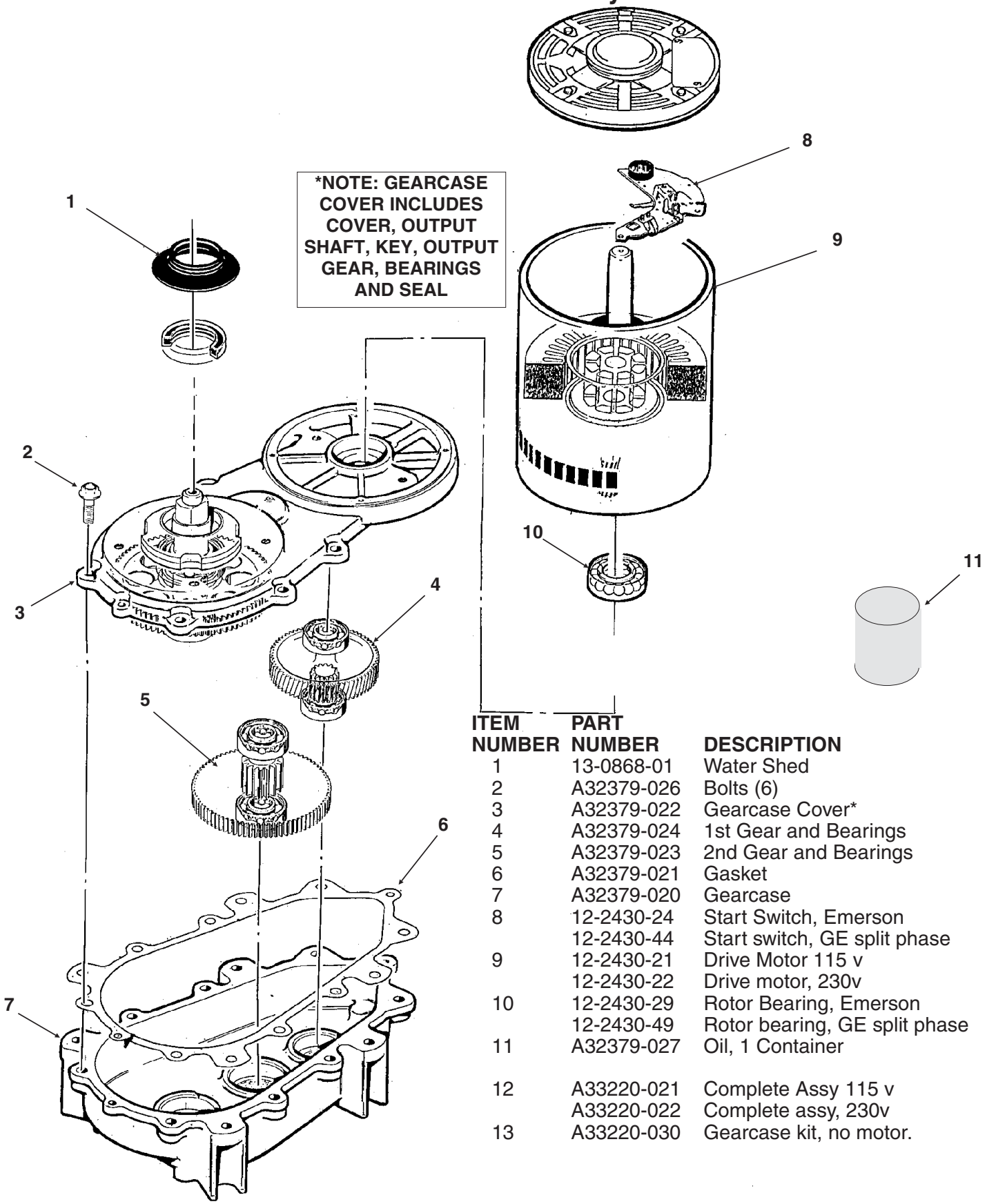

ITEM NUMBER	PART NUMBER	DESCRIPTION
1	13-0868-01	Water Shed
2	A32379-026	Bolts (6)
3	A32379-022	Gearcase Cover*
4	A32379-024	1st Gear and Bearings
5	A32379-023	2nd Gear and Bearings
6	A32379-021	Gasket
7	A32379-020	Gearcase
8	12-2430-24	Start Switch, Emerson
	12-2430-44	Start switch, GE split phase
9	12-2430-21	Drive Motor 115 v
	12-2430-22	Drive motor, 230v
10	12-2430-29	Rotor Bearing, Emerson
	12-2430-49	Rotor bearing, GE split phase
11	A32379-027	Oil, 1 Container
12	A33220-021	Complete Assy 115 v
	A33220-022	Complete assy, 230v
13	A33220-030	Gearcase kit, no motor.

NDE554 & NDE654 SERVICE PARTS
Control Box

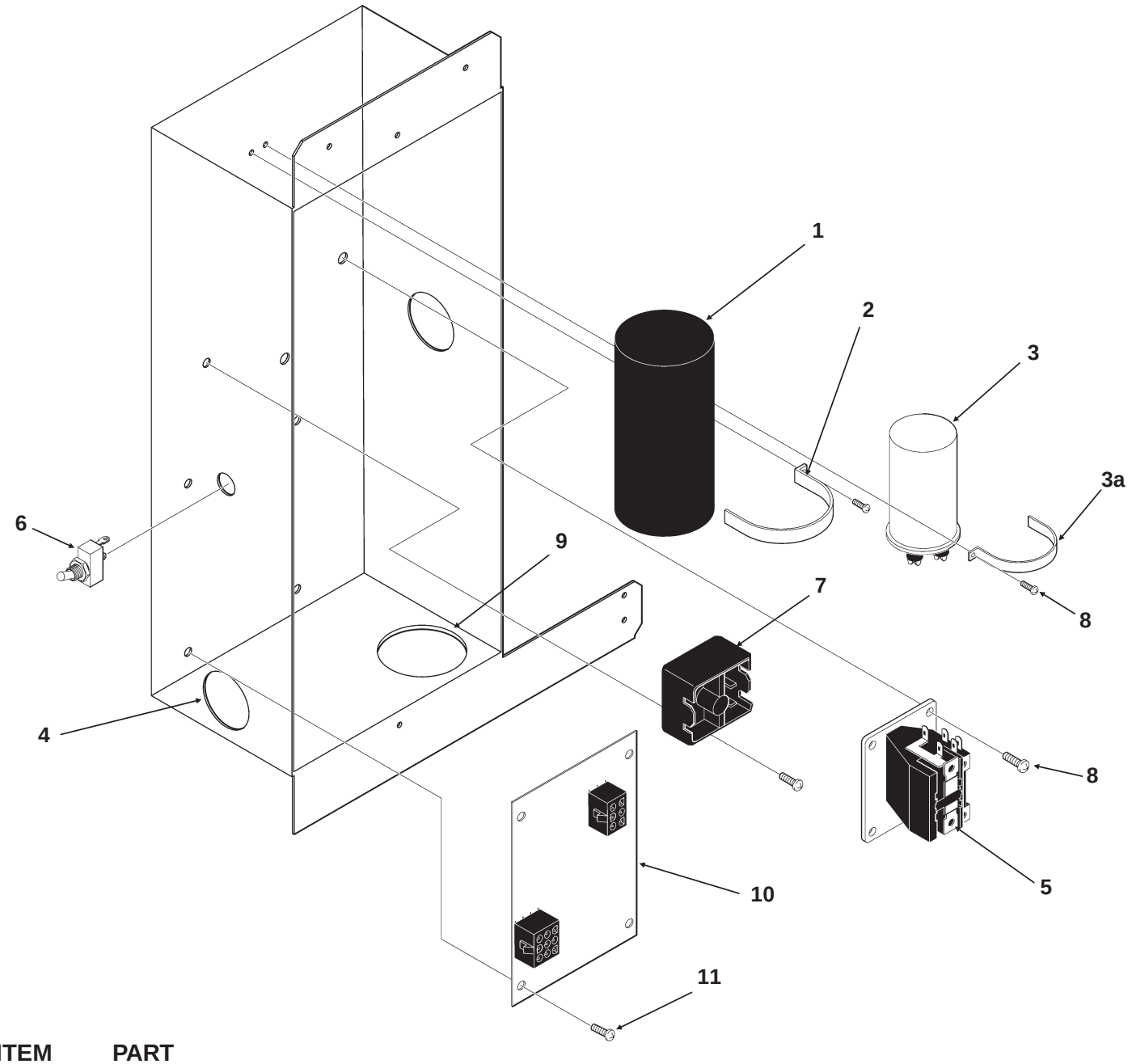

ITEM NUMBER	PART NUMBER	DESCRIPTION
1	18-1901-49	Start Capacitor, 115v 60 Hz
	18-2200-35	Start capacitor, 230v. 50 Hz
2	A35971-001	Start Cap. Bracket
3	18-1902-52	Run capacitor, 115v, 60 Hz
	A35971-002	Run capacitor strap
4	12-1213-10	Bushing
5	12-2048-01	Contactor, 115v, 60 Hz
	12-2048-02	Contactor, 230v, 50 Hz
6	12-0426-02	Switch
7	18-1903-44	Potential Relay, 115v, 60 Hz
	18-1903-48	Current Relay, 230v, 50 Hz
8	03-1531-01	Screw
9	12-1213-12	Bushing
10	12-2835-21	Circuit Board
11	12-2350-01	Standoff

NOT ILLUSTRATED:

13	A33127-001	Control Box Cover
14	A27857-001	Time Delay Relay

NDE554 & NDE654 SERVICE PARTS

Wiring Diagram for 60 Hz

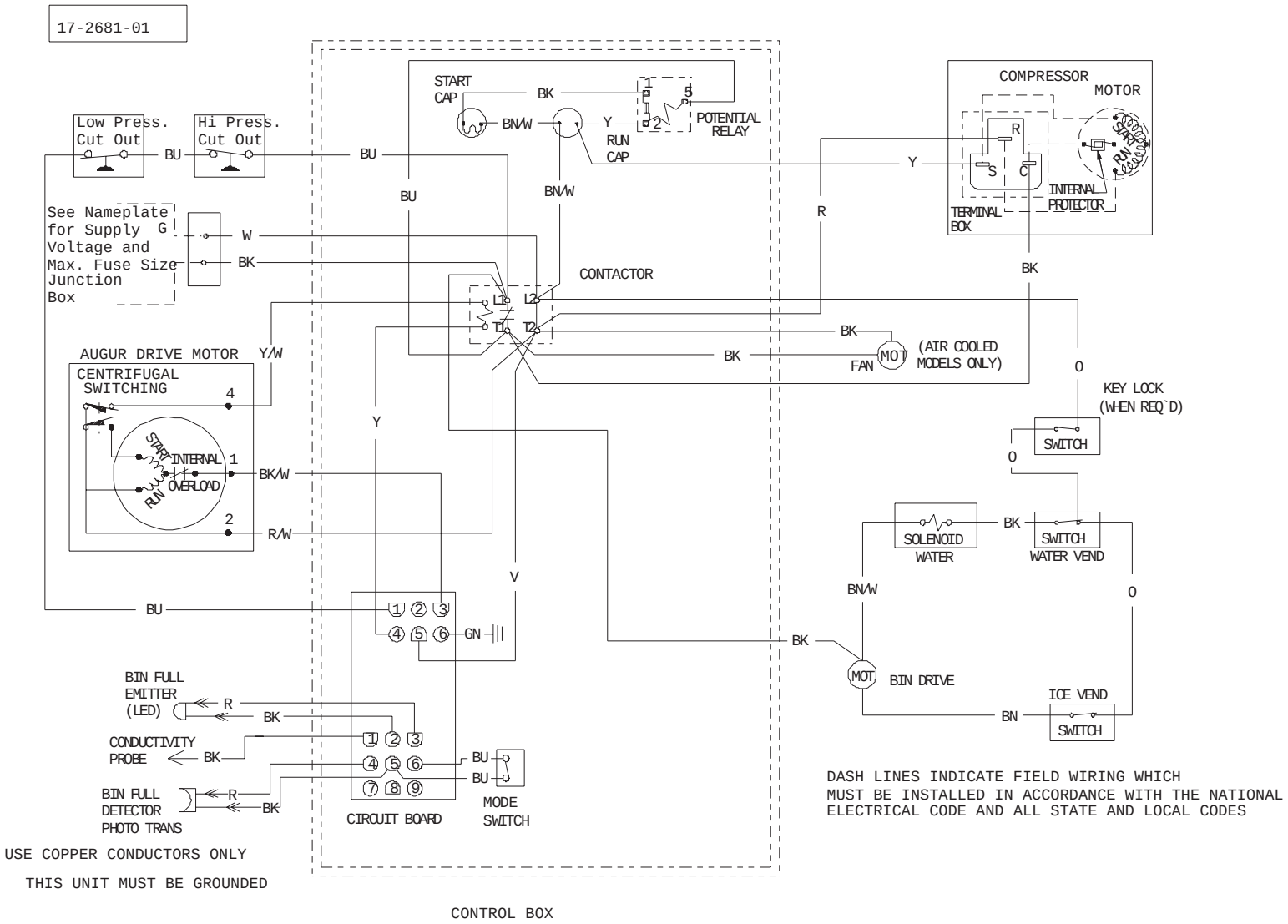

NDE554 & NDE654 SERVICE PARTS

Schematic Diagram for 60 Hz

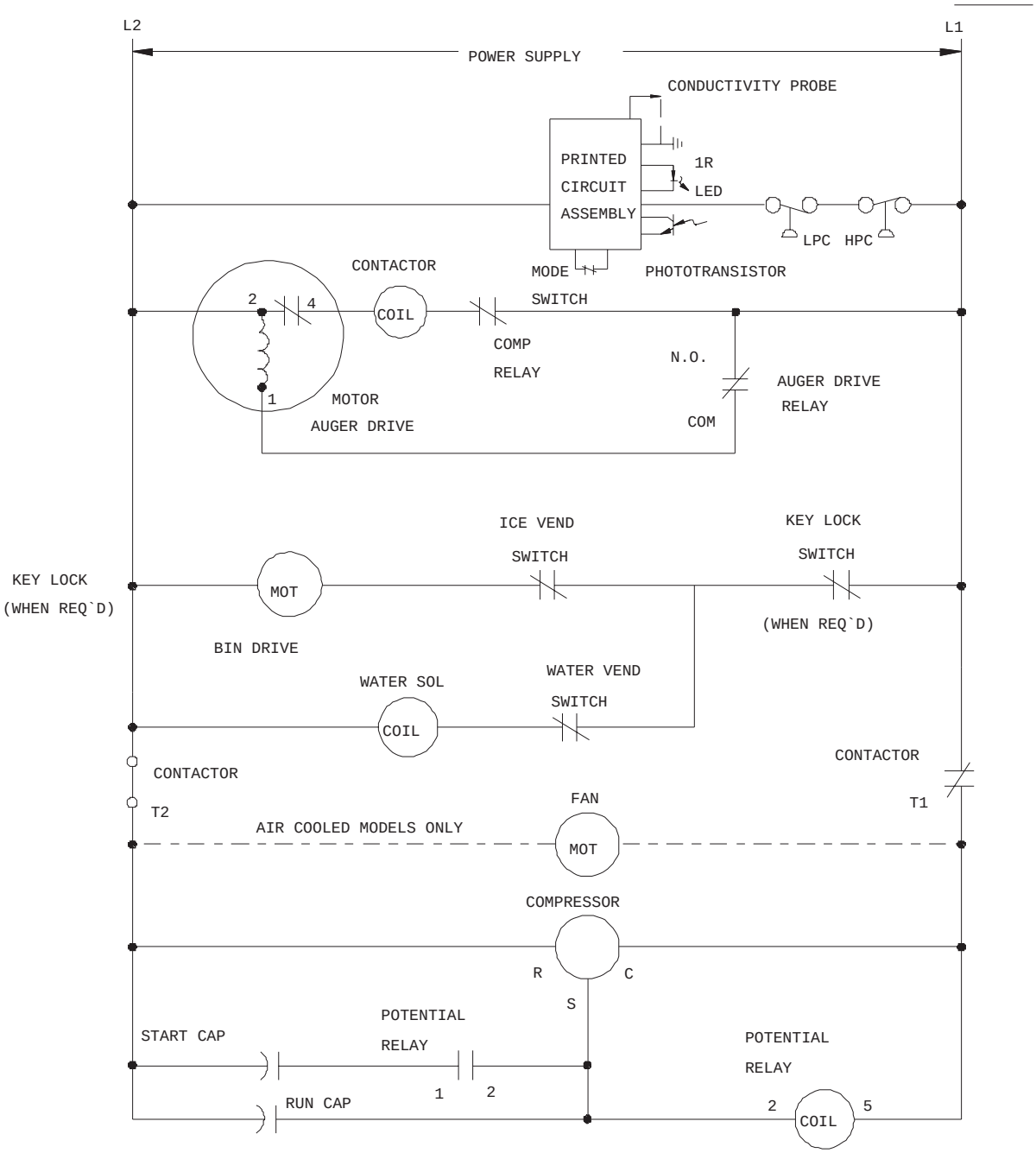

ALL CONTROLS SHOWN IN NORMAL ICE MAKING MODE
WITH ALL DISPENSING SYSTEMS IN OPERATION.

NDE554 & NDE654 SERVICE PARTS
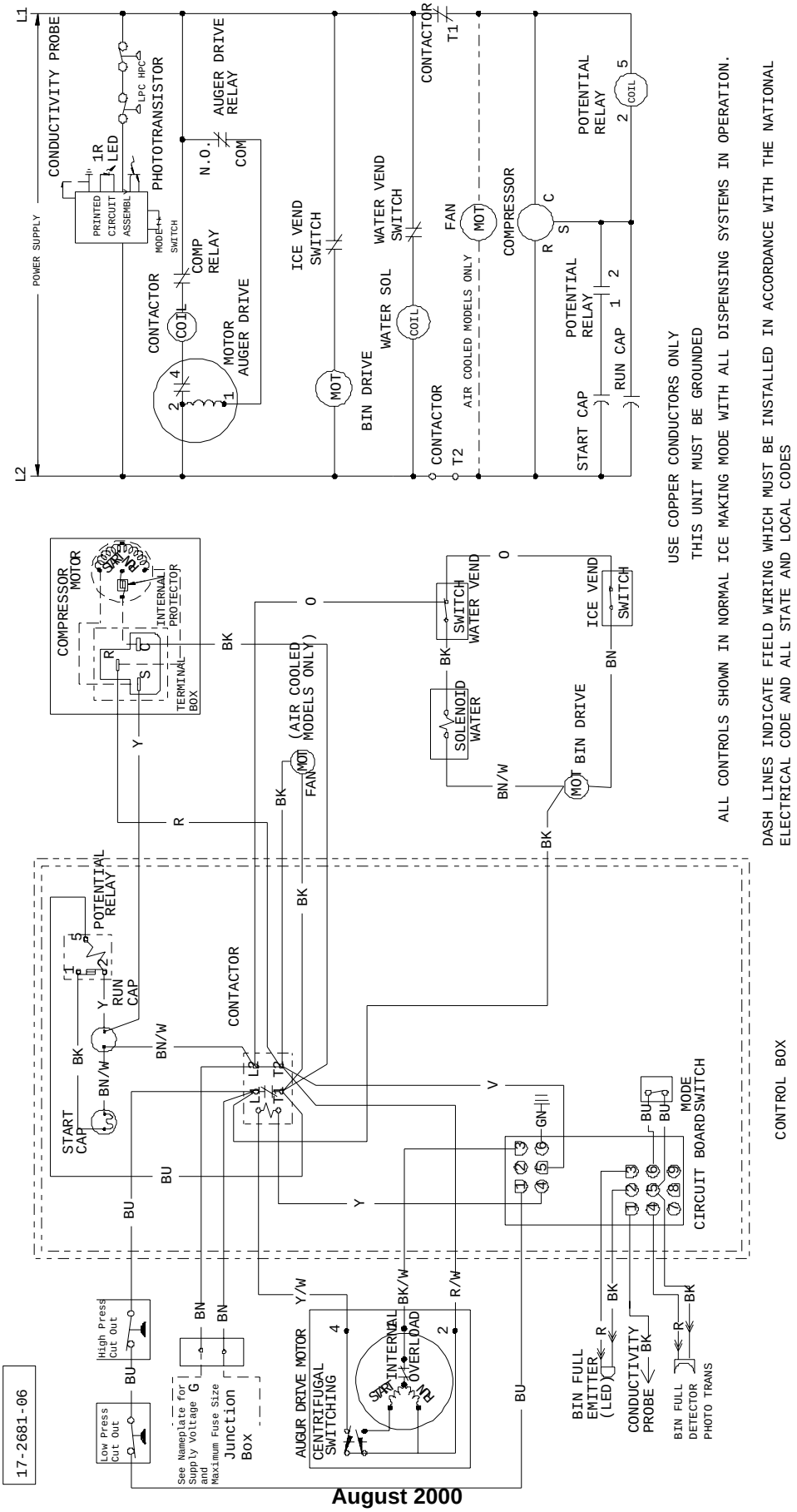
Wiring Diagram for 230/50/1