NME650 & FME800 SERVICE PARTS

This parts list contains the service parts and wiring diagrams for this model. Check the model number in question to be sure that it is applicable to this parts list.
Caution: This model ice maker has been manufactured in two voltages: 115/60/1 and 230/50/1.
The model numbers for the 115/60/1 include:
FME800AE-1A and FME800WE-1A
NME650AE-1A and NME650WE-1A
The model numbers for the 230/50/1 include:
FME800AE-6A and FME800WE-6A
FME800AE-6B and FME800WE-6B
NME650AE-6A and NME650WE-6A
NME650AE-6B and NME650WE-6B
For electrical components, check to be certain that the part is the correct voltage for the machine.

Note: The liquid line filter drier listed in this parts list is designed for this refrigeration system. Premature refrigeration system failure may result if the wrong drier is used.

TABLE OF CONTENTS

Cabinet 2

Air Cooled Refrigeration 3

Water Cooled Refrigeration 4

Water System 5

Gearmotor 6

FME800 Evaporator 7

NME650 Evaporator 8

Control Box 9

Wiring Diagrams 10

NME650 & FME800 SERVICE PARTS
Cabinet Assembly

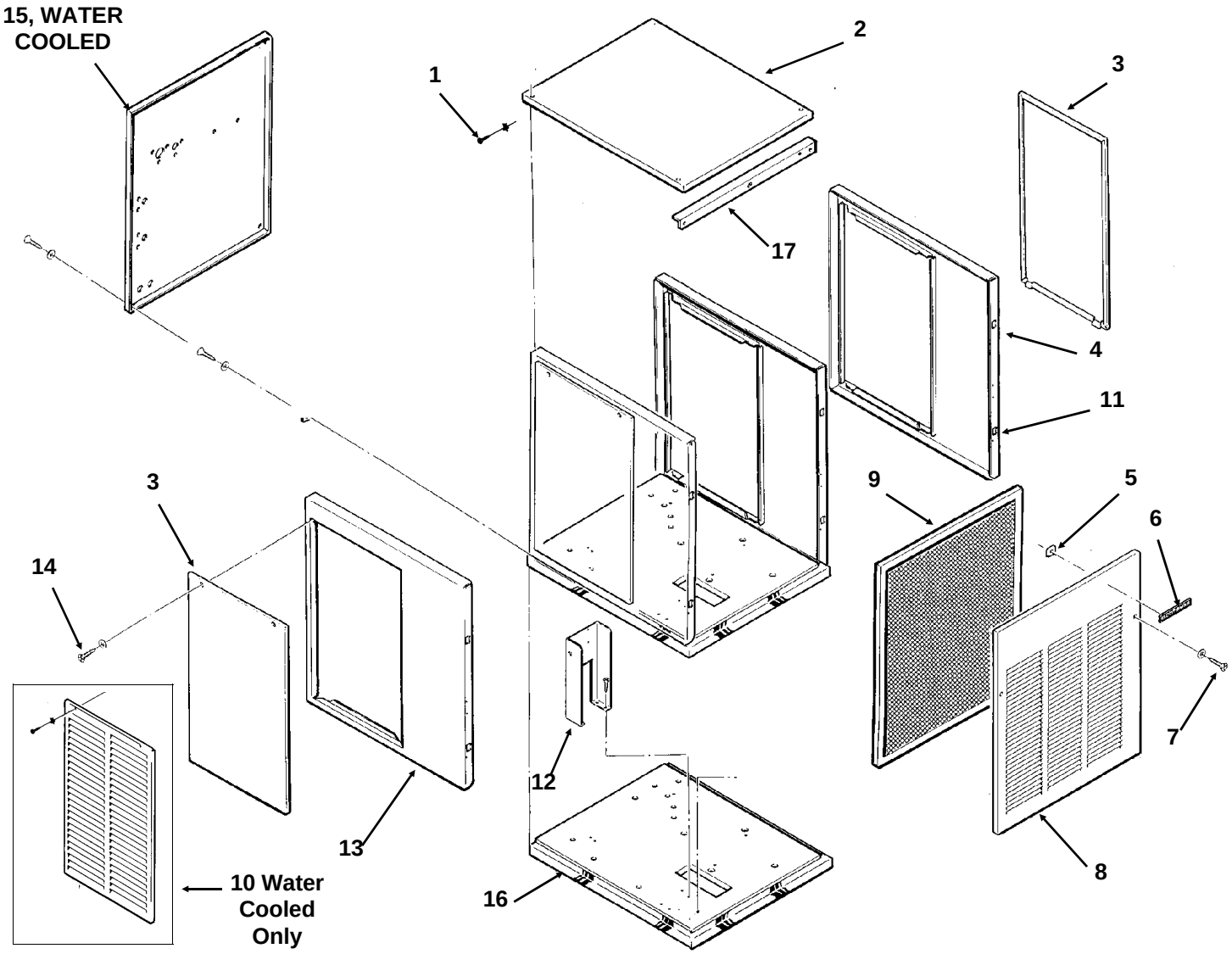

ITEM NUMBER	PART NUMBER	DESCRIPTION
1	03-1531-01	Screw
2	A33256-001	Top panel, sandalwood
	A33256-002	Top panel, S.S.
3	A34038-001	Air cooled srvc pnl, sandalwood
	A34038-015	Air cooled service panel, gray
	A34038-002	Air cooled service panel, S.S.
4	A33292-001	Right side panel, sandalwood
	A33292-002	Right side panel, S.S.
5	03-0271-00	Speed Clip
6	15-0808-01	Emblem
7	03-1419-22	Screw
8	A33255-001	Front panel, sandalwood
	A33255-015	Front panel, gray
	A33255-002	Front panel, S.S.
9	02-2976-01	Air Filter (air cooled only)
	03-1660-01	Filter clip

ITEM NUMBER	PART NUMBER	DESCRIPTION
10	Only for water cooled models (left or right):	
	A33946-032	Louvered panel, for SS
	A32161-001	Louvered panel, for s-wood
	A32161-015	Louvered panel for gray
11	02-0836-00	Catch
	15-0411-00	Strike
	03-1406-04	Nut
12	A34039-001	Control Box Support
13	A32435-001	Left side panel, sandalwood
	A32435-015	Left side panel, gray
	A32435-002	Left side panel, S.S.
14	03-1404-12	Screw
15	A35924-001	Rear panel, water cooled s-wood
	A35924-002	Rear panel, water cooled, SS
	A35924-015	Rear panel, gray
16.	A35890-020	Base
17	A34348-001	Front Brace, Air Cooled

NME650 & FME800 SERVICE PARTS
Air Cooled Refrigeration

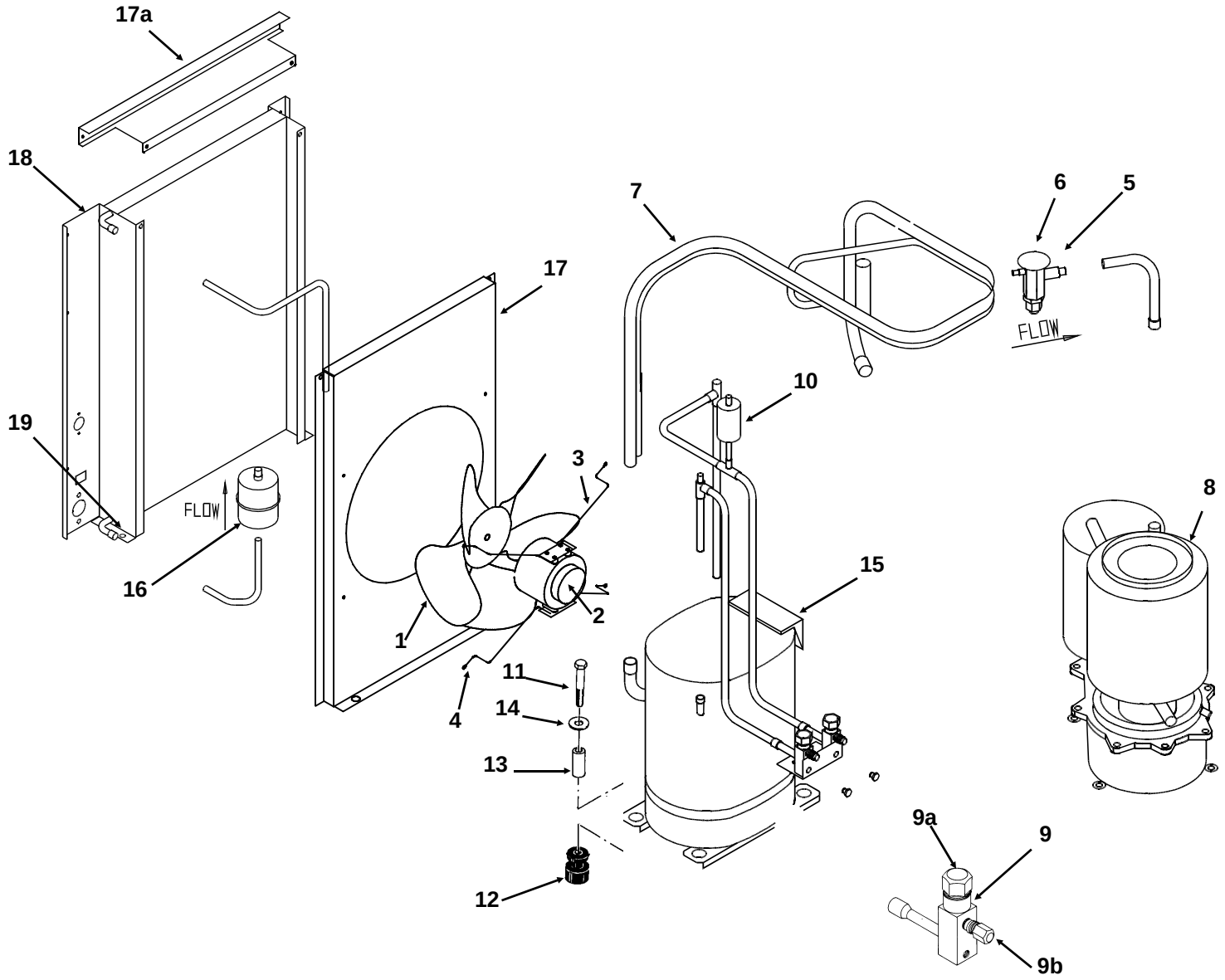

ITEM NUMBER	PART NUMBER	DESCRIPTION
1	18-8747-01	Fan blade
2	18-8736-01	Fan motor, 115v/60 Hz
	18-8736-04	Fan motor, 230v/50 Hz
3	02-2378-02	Fan Bracket
4	03-1531-01	Screw
5	A32961-020	Insulation Kit (3 piece)
6	11-0488-21	Thermo Expansion Valve
7	A35870-001	Suction Line
8	A33194-020	Evaporator - see page 7
9	16-0832-20	Access valve
9a	16-0832-02	Stem cap
9b	16-0832-03	Core cap
10	11-0485-21	Hi Pressure Cut Out
11	03-1645-01	Screw

ITEM NUMBER	PART NUMBER	DESCRIPTION
12	18-2200-28	Grommet
13	18-2200-27	Sleeve
14	03-1407-07	Washer
15	18-8721-21	Compressor 115v/60 Hz
	18-8711-50	Overload for 115 v
	18-8721-22	Compressor 230v/50 Hz
	18-8721-50	Overload for 50 Hz compressor
16	02-3319-02	Dryer
17	A35886-001	Fan Shroud
17a	A35582-001	Fan shroud cover
18	18-8734-01	Condenser
19	03-1645-01	Screw
NME650 -6B or FME800 - 6B only:		
21	11-0512-01	Low pressure cut out switch

NME650 & FME800 SERVICE PARTS
Water Cooled Refrigeration

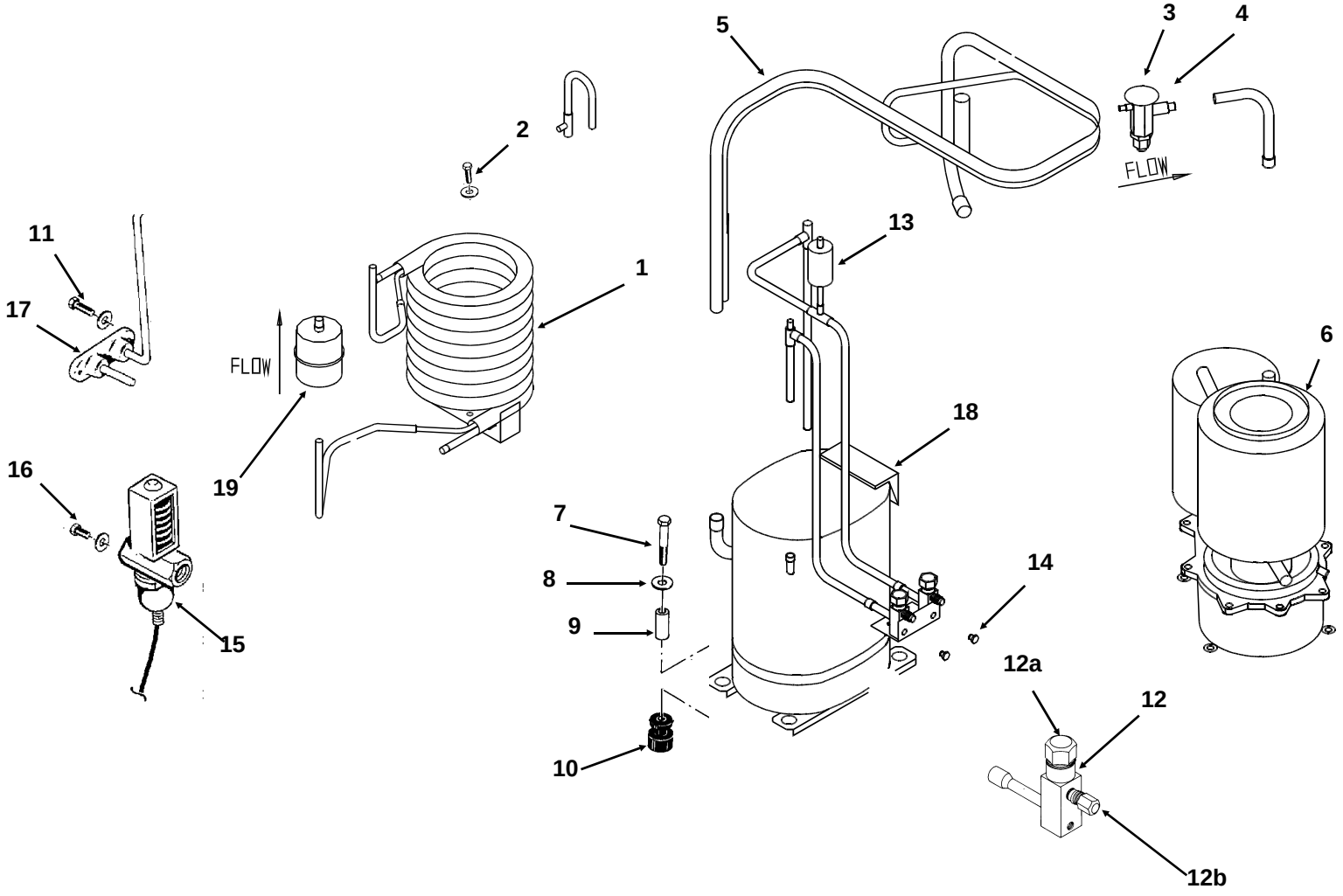

ITEM NUMBER	PART NUMBER	DESCRIPTION
1	18-3306-25	Condenser
2	03-1645-01	Screw
3	11-0488-21	Thermo Expansion Valve
4	A32961-020	Insulation Kit (3 piece)
5	A35870-001	Suction Line
6	A33194-020	Evaporator - see page 7
7	03-1405-20	Cap Screw
8	03-1407-07	Washer
9	18-2200-27	Sleeve
10	18-2200-28	Grommet
11	03-1645-01	Screw
12	16-0832-20	Access valve
12a	16-0832-02	Stem cap
12b	16-0832-03	Core cap

ITEM NUMBER	PART NUMBER	DESCRIPTION
13	11-0485-21	Hi Pressure Cut Out
14	03-0571-02	Screw
15	11-0478-01	Water Reg. Valve
16	03-1403-14	Screw
17	A34543-001	Drain Assembly (WC)
18	18-8721-21	Compressor 115/60/1
	18-8711-50	Overload 115v
	18-8721-22	Compressor 230v/50 Hz
	18-8721-50	Overload for 50 Hz compressor
19	02-3319-02	Dryer
NME650 -6B or FME800 - 6B only:		
20	11-0512-01	Low pressure cut out switch

NME650 & FME800 SERVICE PARTS

Water System

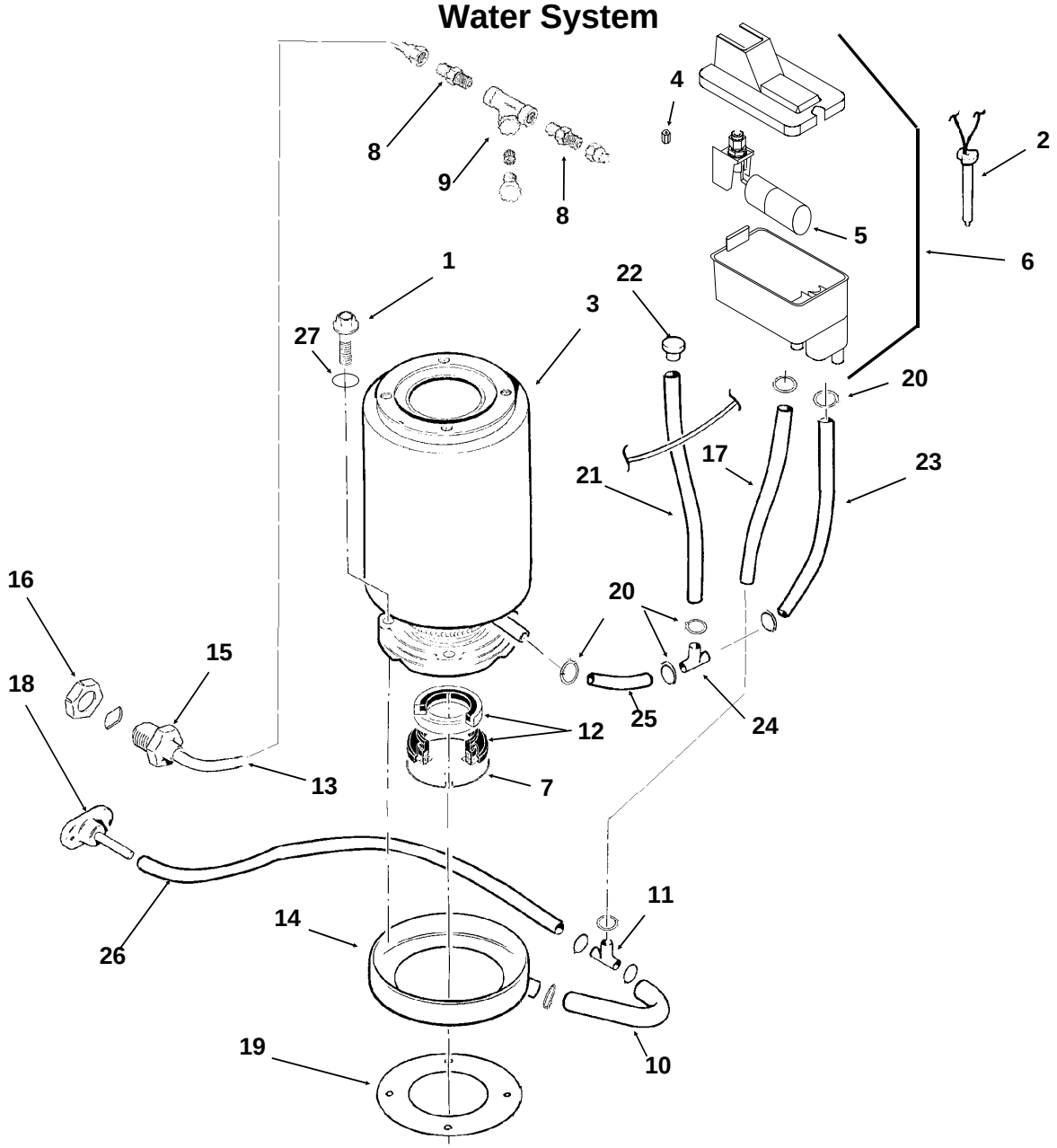

ITEM NUMBER	PART NUMBER	DESCRIPTION	ITEM NUMBER	PART NUMBER	DESCRIPTION
1	03-1420-03	Cap Screw	14	02-3837-01	Drip Pan
2	A33101-022	Water Level Sensor	15	A27318-001	Water Inlet Fitting
3	A33194-020	Evaporator	16	03-1394-01	Pal Nut
4	02-3266-03	Valve Seat	17	13-0079-03	Res. Overflow, 11" req.
5	02-3266-21	Float valve & valve seat	18	A32282-004	Drain Casting, air cooled
6	02-3266-20	Reservoir Assy Complete	19	13-0704-00	Gasket
	A36078-001	Reservoir bracket (not shown)	20	02-2814-08	Clamps
7	A32777-001	Retaining Ring for seal	21	13-0674-06	Evap. Drain, 20" req.
8	16-0791-01	Half Union	22	13-0840-01	Plug
9	16-0162-00	Strainer	23	13-0674-06	Evap. Inlet Tube, 10" req.
10	13-0079-03	Tube, 6" req.	24	16-0670-01	Tee
11	16-0670-02	Tee	25	A33203-001	Tube, Preformed
12	02-0929-23	Water Seal	26	13-0079-03	Drain Tube, 27" req.
13	no number	Water Inlet Tube	27.	03-1417-13	Lockwasher

NME650 & FME800 SERVICE PARTS

Gearmotor

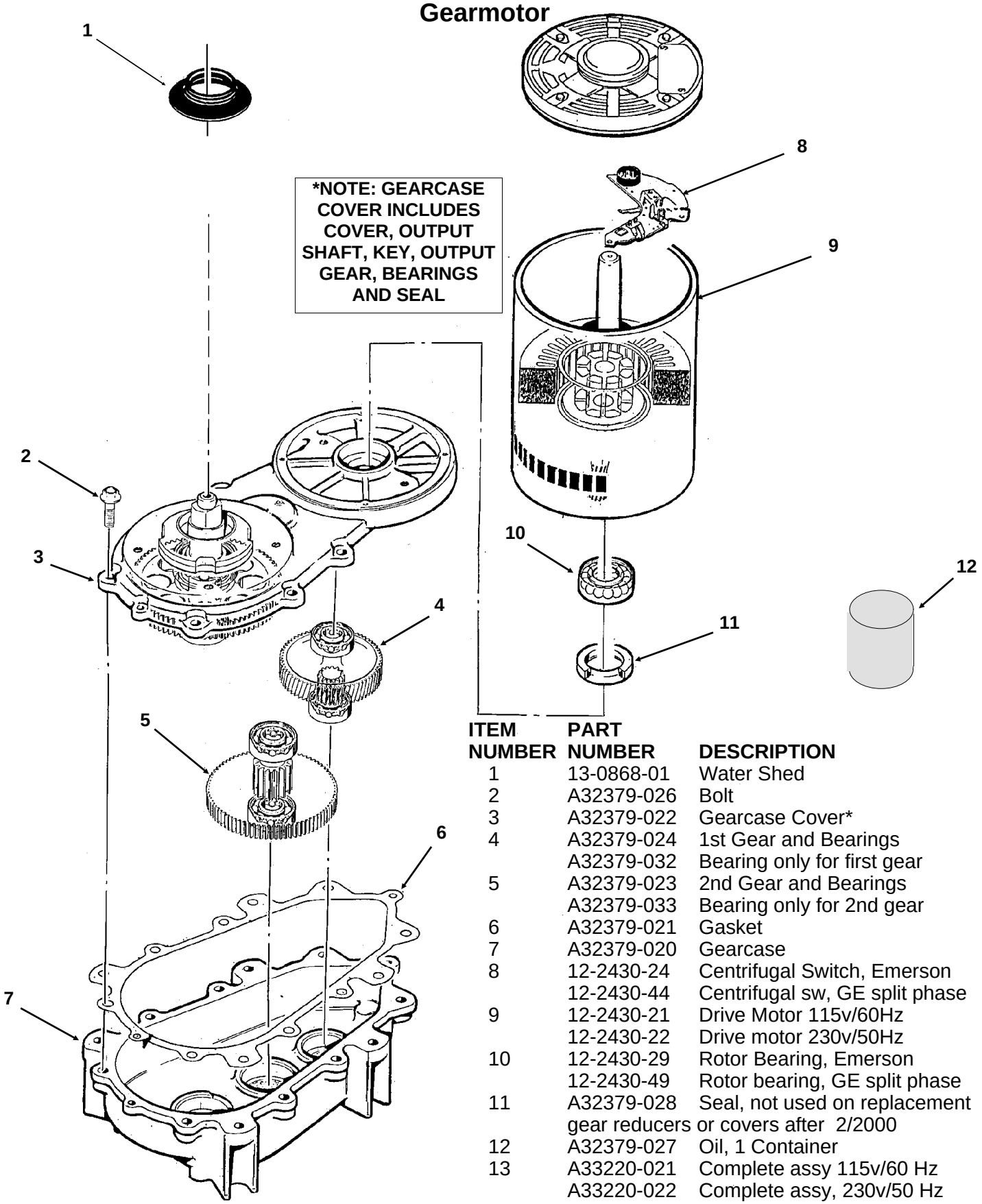

ITEM NUMBER	PART NUMBER	DESCRIPTION
1	13-0868-01	Water Shed
2	A32379-026	Bolt
3	A32379-022	Gearcase Cover*
4	A32379-024	1st Gear and Bearings
	A32379-032	Bearing only for first gear
5	A32379-023	2nd Gear and Bearings
	A32379-033	Bearing only for 2nd gear
6	A32379-021	Gasket
7	A32379-020	Gearcase
8	12-2430-24	Centrifugal Switch, Emerson
	12-2430-44	Centrifugal sw, GE split phase
9	12-2430-21	Drive Motor 115v/60Hz
	12-2430-22	Drive motor 230v/50Hz
10	12-2430-29	Rotor Bearing, Emerson
	12-2430-49	Rotor bearing, GE split phase
11	A32379-028	Seal, not used on replacement gear reducers or covers after 2/2000
12	A32379-027	Oil, 1 Container
13	A33220-021	Complete assy 115v/60 Hz
	A33220-022	Complete assy, 230v/50 Hz

The complete assembly includes the water shed and drip pan gasket.

	A33220-030	Gears, oil & cases, no motor

NME650 & FME800 SERVICE PARTS
FME Evaporator

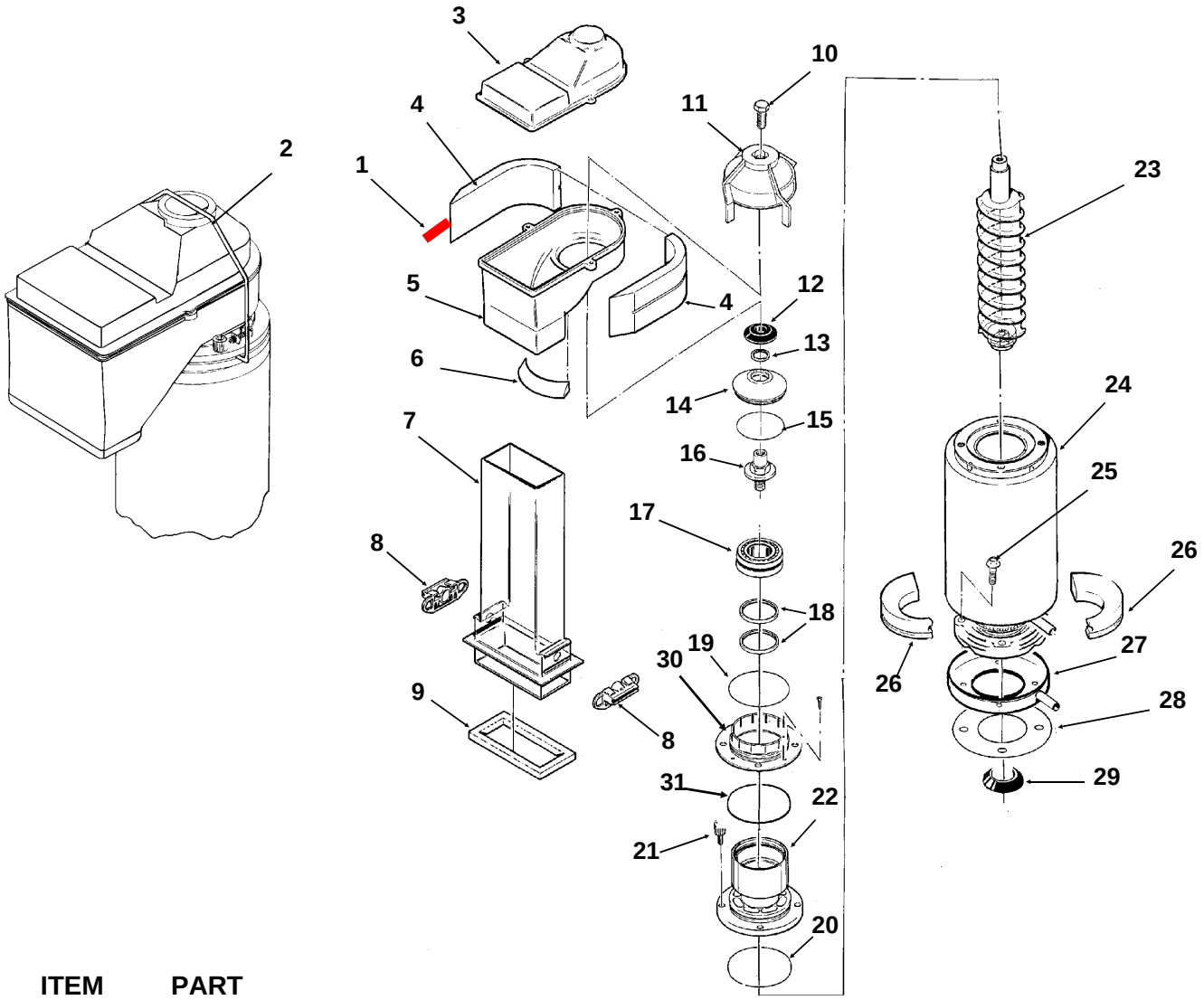

ITEM NUMBER	PART NUMBER	DESCRIPTION
1.	A35419-020	Strap kit
2.	A34969-001	Bail clamp
3.	02-2930-04	Ice Chute Cover
4.	A32963-001	Insulation Top (half)
5.	02-3841-01	Ice Chute Body
6.	A33102-001	Insulation Collar Inside
7.	02-2929-03	Ice Chute Lower
8.	A37708-021	Bin Controls Assy. (set of 2)
9.	A32930-001	Chute Gasket
10.	03-1405-52	Hex Cap Screw
11.	02-3001-01	Ice Sweep
12.	13-0871-01	Water Shed
13.	02-2978-01	Lip Seal
14.	02-3128-20	Breaker Cover
15.	13-0617-54	O-Ring
16.	08-0660-01	Auger Stud
17.	A34559-020	Bearing
18.	02-2977-01	Lip Seal
19.	13-0617-52	O-Ring
20.	13-0617-45	O-Ring
21.	03-1544-08	Soc. Head Screw
22.	A34505-020	Breaker (includes 13, 14, 15, 17 18 & 20)
23.	A38071-021	Auger
24.	A33194-020	Evaporator
25.	03-1405-41	Cap Screw
26.	A32962-001	Insulation Bot. (half)
	A32962-002	Insulation half
27.	A32050-001	Drip Pan
28.	13-0704-00	Drip Pan Gasket
29.	13-0868-01	Water Shed
30.	02-2916-01	Slotted collar
31.	13-0617-49	O-Ring

NME650 & FME800 SERVICE PARTS

NME Evaporator

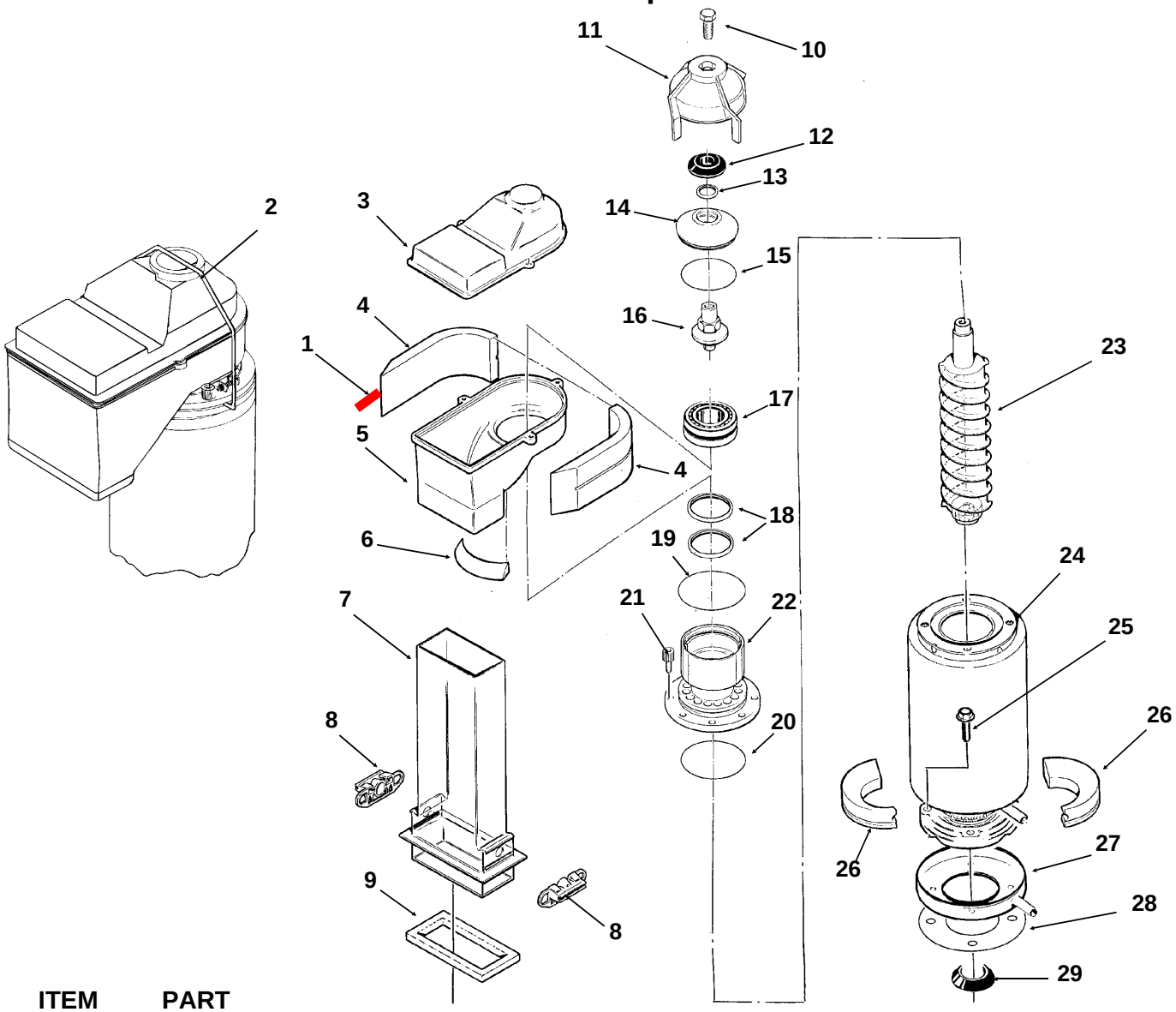

ITEM NUMBER	PART NUMBER	DESCRIPTION
1.	A35419-020	Strap kit
2.	A34969-001	Bail clamp
3.	02-2930-04	Ice Chute Cover
4.	A32963-001	Insulation Top (half)
5.	02-3841-01	Ice Chute Body
6.	A33102-001	Insulation Collar Inside
7.	02-2929-03	Ice Chute Lower
8.	A37708-021	Bin Controls Assy. (set of 2)
9.	A32930-001	Chute Gasket
10.	03-1405-52	Hex Cap Screw
11.	02-3001-01	Ice Sweep
12.	13-0871-01	Water Shed
13.	02-2978-01	Lip Seal
14.	02-3128-20	Breaker Cover
15.	13-0617-54	O-Ring
16.	08-0660-01	Auger Stud
17.	A34559-020	Bearing
18.	02-2977-01	Lip Seal
19.	13-0617-52	O-Ring
20.	13-0617-45	O-Ring
21.	03-1544-08	Soc. Head Screw
22.	A32900-020	Breaker (includes 13,14,15,17, 18 & 20)
23.	A38071-021	Auger
24.	A33194-020	Evaporator
25.	03-1405-41	Cap Screw
26	A32962-001	Insulation Bot. (half)
	A32962-002	Insulation half
27	A32050-001	Drip Pan
28	13-0704-00	Drip Pan Gasket
29	13-0868-01	Water Shed

NME650 & FME800 SERVICE PARTS
Control Box

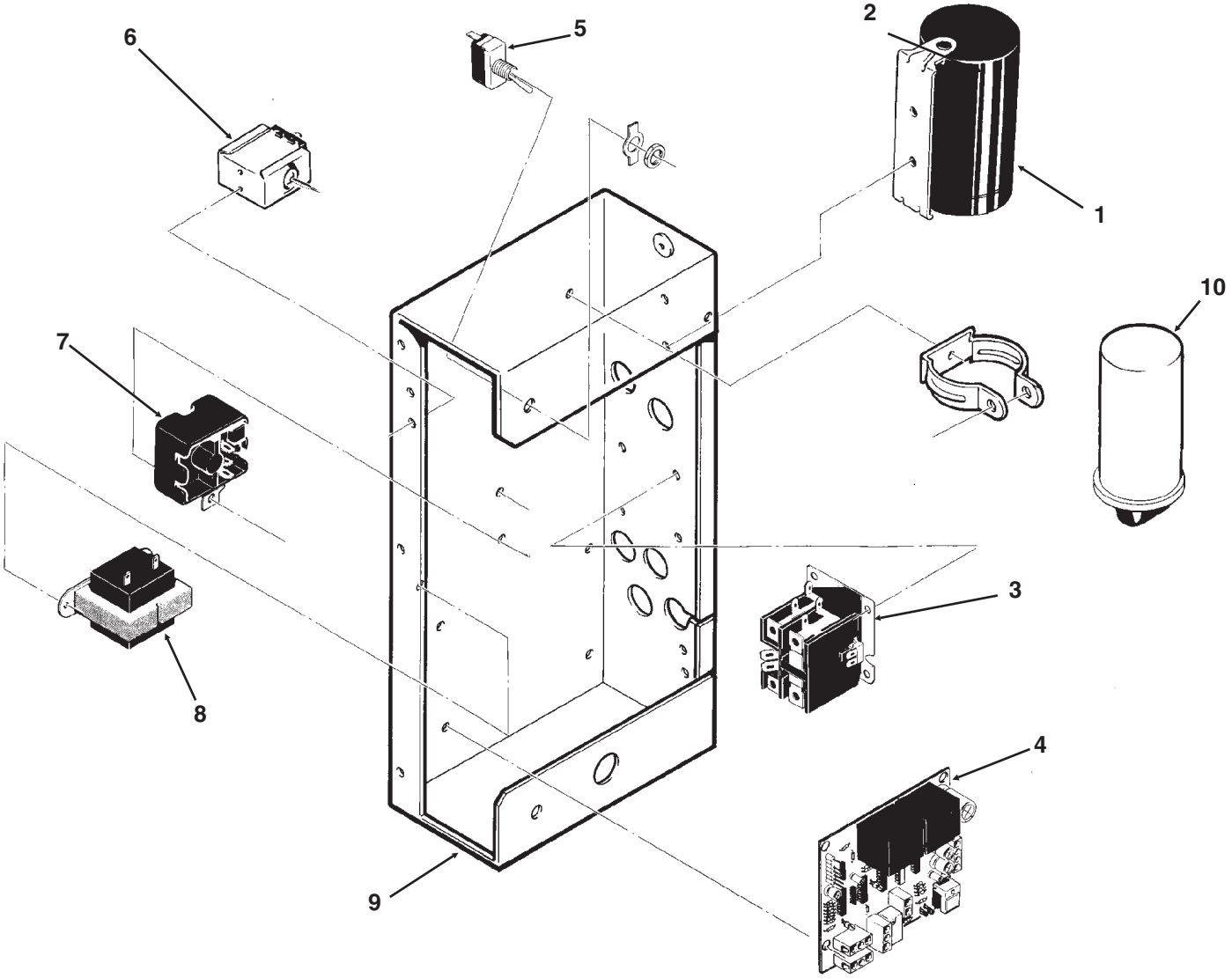

ITEM NUMBER	PART NUMBER	DESCRIPTION
1*	18-1901-03	Start Capacitor 115 v
	18-1901-43	Start Capacitor 230v/50 Hz
	18-2200-38	Start Capacitor Cap.
2.	18-2200-39	Start Capacitor Bracket
	03-1638-04	Screw
	03-1417-24	Lockwasher
3.*	12-2469-03	Contactor 115v/60 Hz
	12-2469-02	Contactor 230v/50 Hz
NME-6B or FME800-6B only:		
	12-2649-02	Contactor 230v/50 Hz
4	A37750-021	Circuit Board
5.	12-0426-01	Master Switch
NME650 -6B or FME800 - 6B only:		
	12-2637-01	Toggle switch
6.	11-0447-20	Low Pressure Control - all but NME650-6B or FME800-6B

ITEM NUMBER	PART NUMBER	DESCRIPTION
7*	18-1903-50	Potential relay 115 volt
	18-1903-56	Potential relay 230v/50 Hz
8.*	12-2285-21	Transformer 115v/60 Hz
	12-2285-22	Transformer 230v/50 Hz
NME650 -6B or FME800 - 6B only:		
	12-2639-01	Transformer
9	no number	Control Box
10*	18-1902-45	Run capacitor, 115v/60 Hz
	18-1902-30	Run capacitor, 230v/50 Hz
NOT ILLUSTRATED		
11.	12-2337-05	2 Pin Plug Assy (Safety Circuit to Circuit Board)
12.	12-2340-01	4 Pin Plug Assy (Transformer to Circuit Board)
13.	A34055-001	Control Box Cover
NME650 -6B or FME800 - 6B only:		
14	12-2687-01	Fuse block
15	12-2686-02	2A Fuse

* Match part voltage to machine voltage.

NME650 & FME800 SERVICE PARTS
Component Layout Diagram

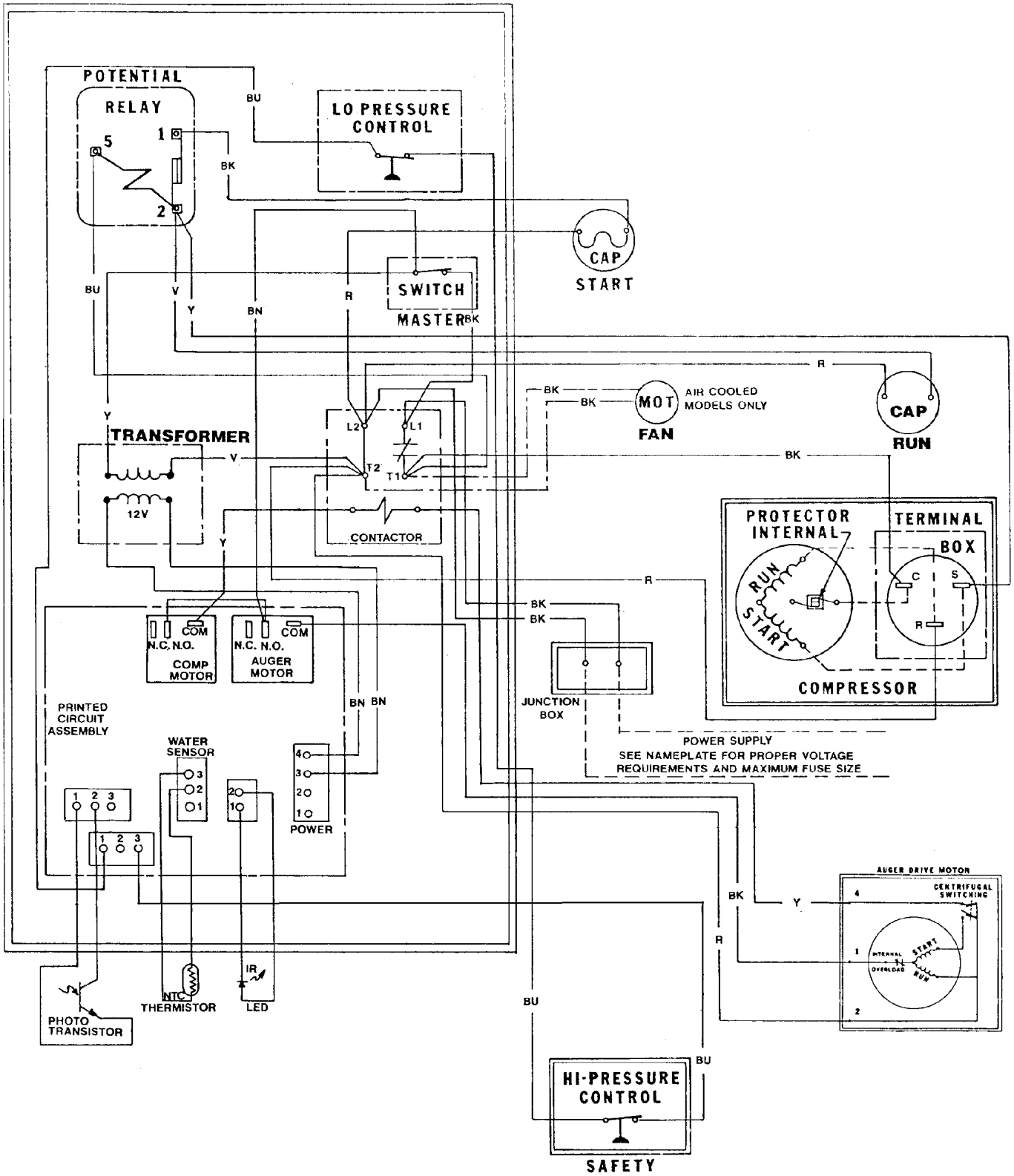

NME650 & FME800 SERVICE PARTS
Schematic Diagram

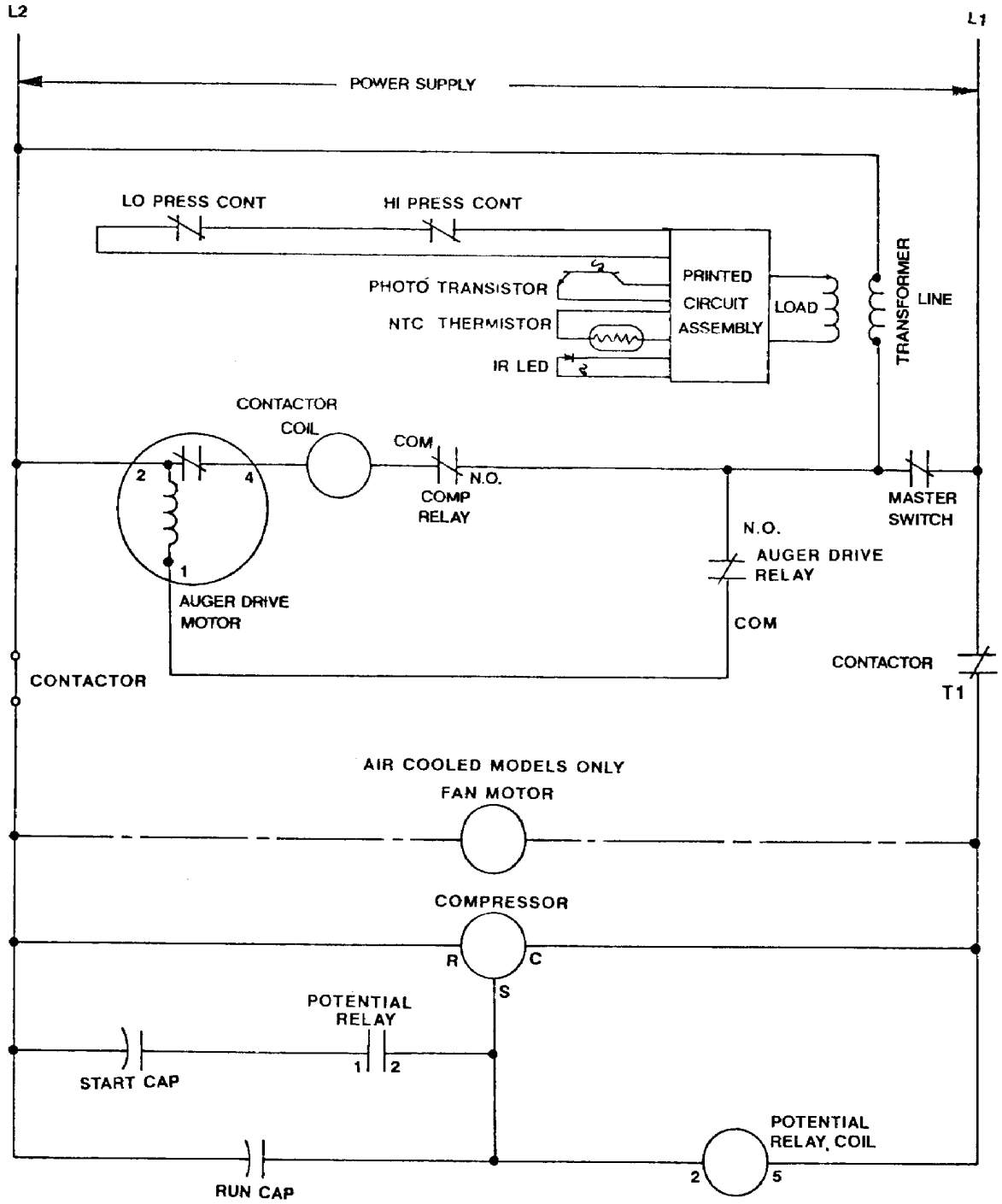

NME650 & FME800 SERVICE PARTS
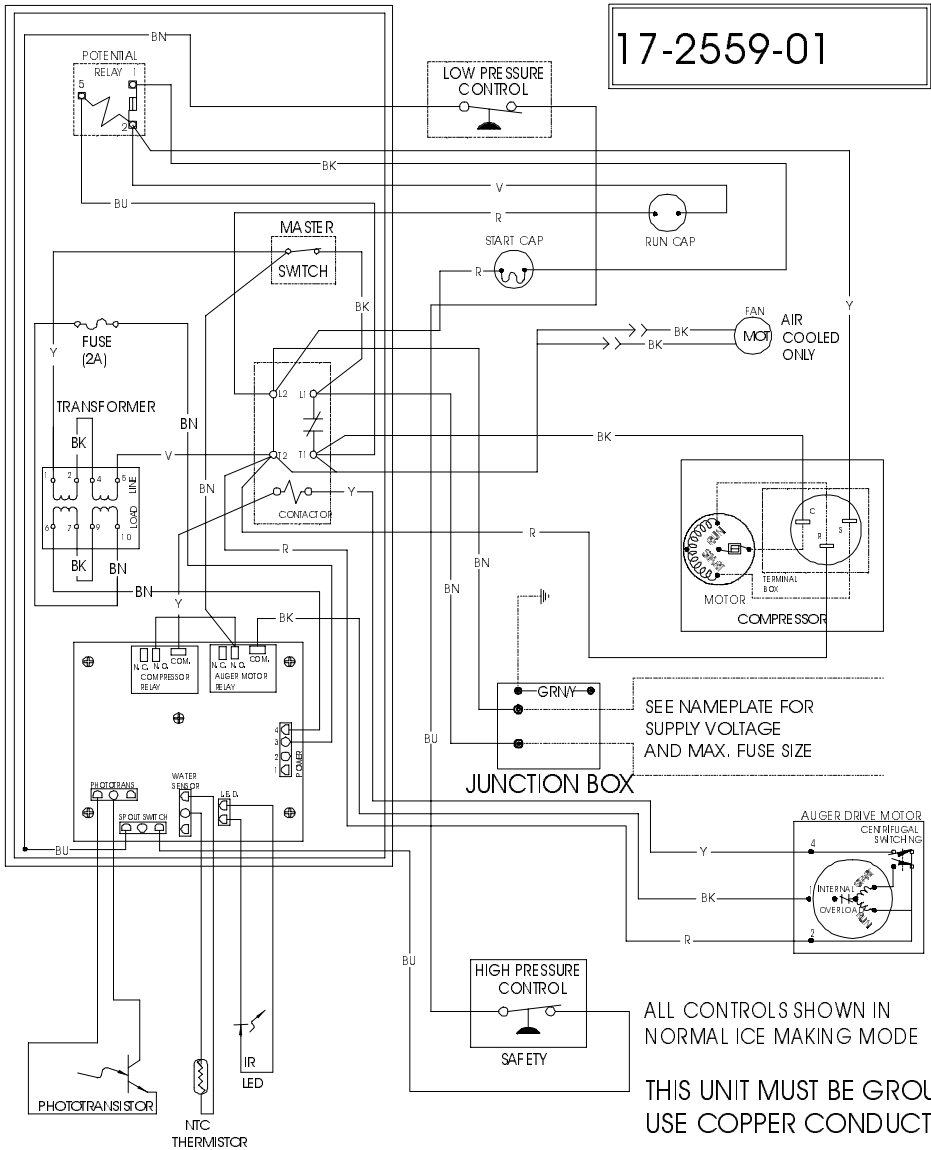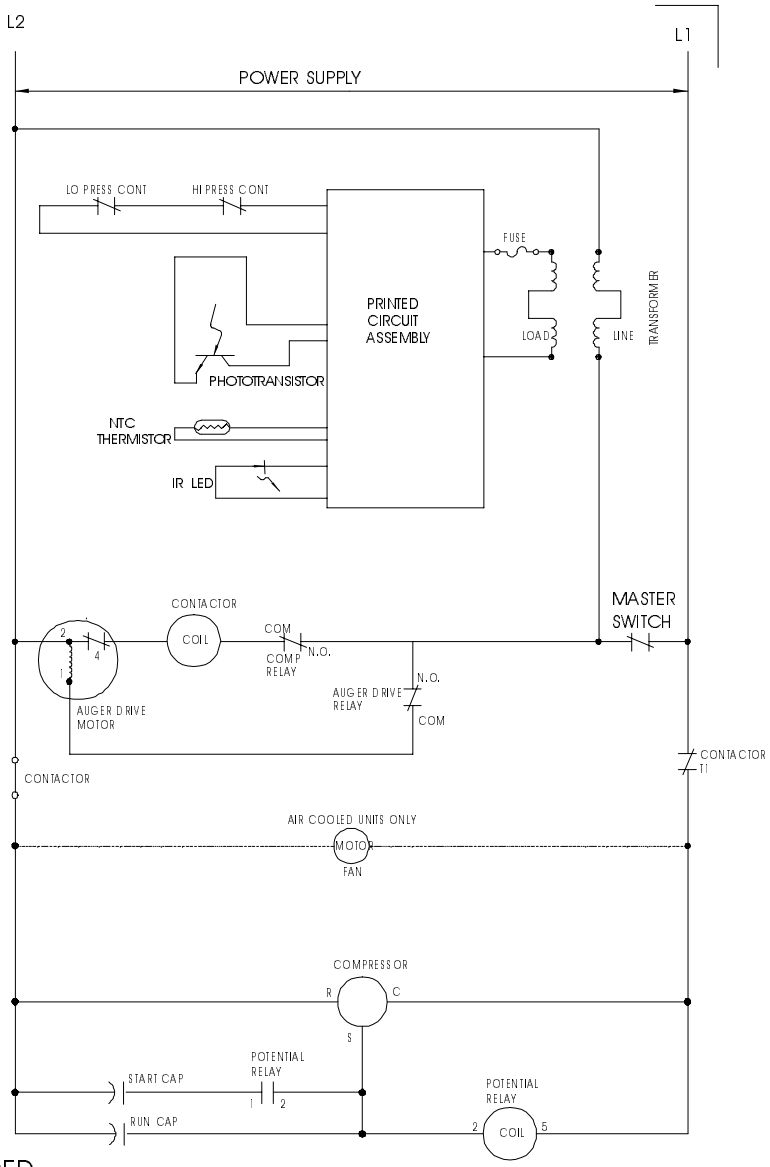
NME650 or FME800 -6B