INTRODUCTION

To the owner or user: The service manual you are reading is intended to provide you, and the maintenance or service technician, with the information needed to install, start up, clean, maintain, and service this ice system.

This is a modular ice system that fits a variety of Scotsman ice storage bins.

It features: front service for the freezer, gearmotor, control box, water reservoir, and bin control; an electronic circuit for monitoring ice and water level; a thermostatic expansion valve; and HP62 as the refrigerant.

Table of Contents

FOR THE INSTALLER 2
SAMPLE BIN AND MACHINE COMBINATIONS 3
FOR THE INSTALLER 4
FOR THE PLUMBER 6
FOR THE ELECTRICIAN 7
START UP 9
COMPONENT DESCRIPTION 10
ELECTRICAL SEQUENCE 13
OPERATION: 14
MAINTENANCE AND CLEANING 16
SERVICE DIAGNOSIS: 20
REMOVAL AND REPLACEMENT: Bin Controls 24
REMOVAL AND REPLACEMENT: Bearing And Breaker 25
REMOVAL AND REPLACEMENT: Auger 26
REMOVAL AND REPLACEMENT: Water Seal 27
REMOVAL AND REPLACEMENT: Evaporator 28
REMOVAL AND REPLACEMENT: Gearmotor 29
REFRIGERATION SERVICE: HP62 30
CIRCUIT BOARD TESTING 32

Parts lists and wiring diagrams are in the center of this manual, printed on yellow paper.

This manual was printed on recycled paper.

Keep this manual for future reference.

Note this symbol when it appears.

⚠WARNING

It is an alert for important safety information on a potential hazard.

NME650 & FME800

FOR THE INSTALLER

These machines fit the following Scotsman products, check sales literature for other possible combinations:

- B90 and extensions (with bin top KBT18)
- HTB555 or BH550 using bin top KBT14 or KBT20
- BH800 using bin top KBT15 (one unit).
- BH800 (two units, no bin top required).
- BH900 using bin top KBT24.

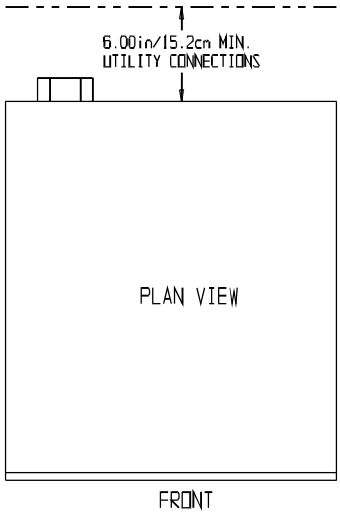

When installing a new system, check to be sure that you have everything you need before beginning:

- Correct Bin
- Correct Ice Machine
- Correct Bin Top (if required)
- All kits, legs, and information required for the specific job.

Installation Limitations:

This ice system is designed to be installed indoors, in a controlled environment:

	Min.	Max.
Air Temperature	50^0F	100^0F
Water Temperature	40^0F	100^0F
Water Pressure	20 PSI	80 PSI
Voltage (for 115v model)	104	126

(Compared to the nameplate)

Operating the machine outside of the limitations is misuse and can void the warranty.

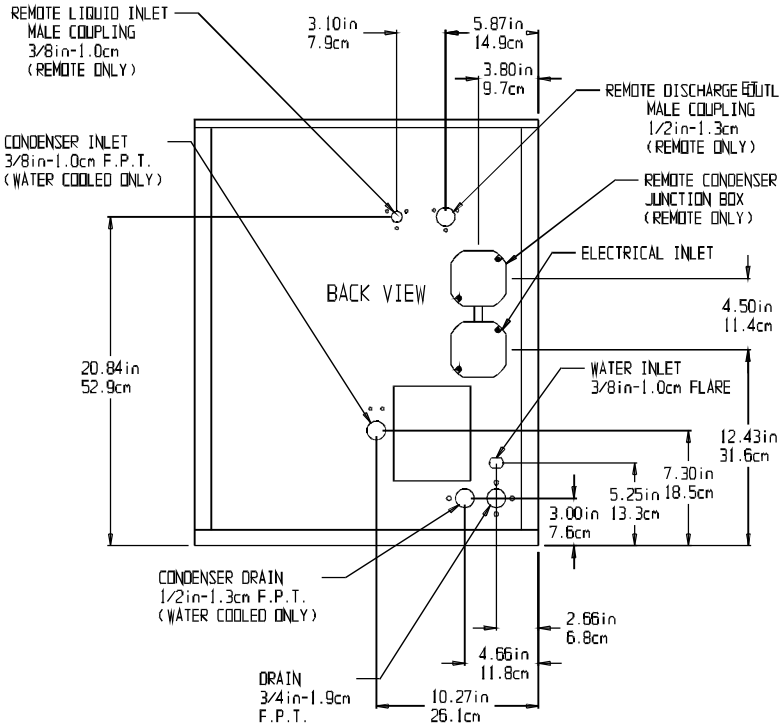

The normal finish for the ice machine is enamel.

A stainless steel panel kit, SPKFM21 may be field installed to convert the unit to a stainless steel finish.

SPECIFICATIONS: **ICE MAKER**

Model Number	Dimensions	Basic Electrical	Ice Type	Condenser Type	Minimum Circuit Ampacity	Max. Fuse Size	Refrigerant Charge:
FME800AE-1A	27" x 21" x 24"	115/60/1	Flake	Air	19.5	30	24 ounces
FME800WE-1A	same	same	same	Water	18.3	30	20 ounces
FME800AE-6B	same	230/50/1	same	Air			24 ounces
FME800WE-6B	same	same	same	Water			20 ounces
NME650AE-1A	same	115/60/1	Nugget	Air	19.5	30	24 ounces
NME650WE-1A	same	same	same	Water	18.3	30	20 ounces
NME650AE-6B	same	230/50/1	same	Air			24 ounces
NME650WE-6B	same	same	same	Water			20 ounces

Note: Minimum Circuit Ampacity is used to determine wire size and type per national electric code.

SAMPLE BIN AND MACHINE COMBINATIONS

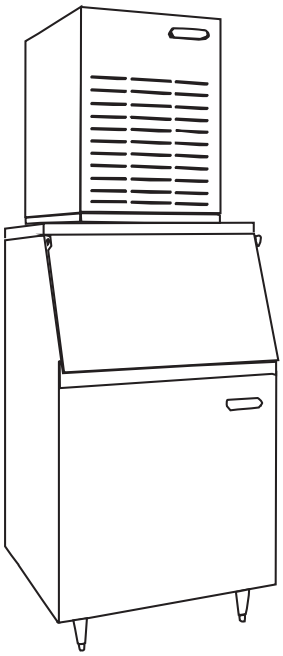

FME800 ON BH550*

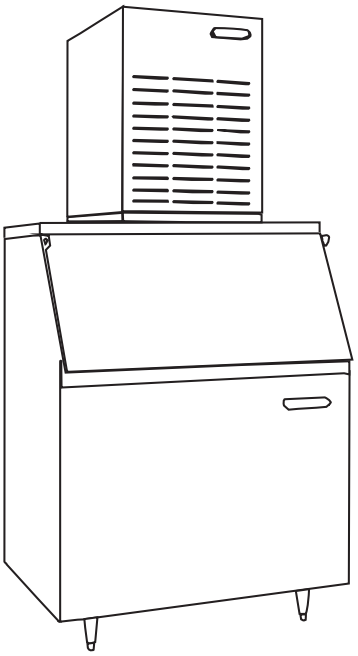

NME650 ON BH800*

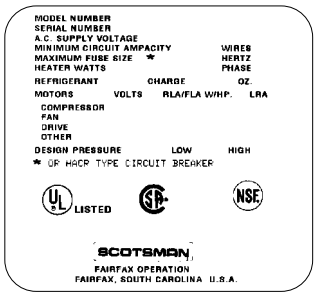

The Nameplate is located on the back of the machine.

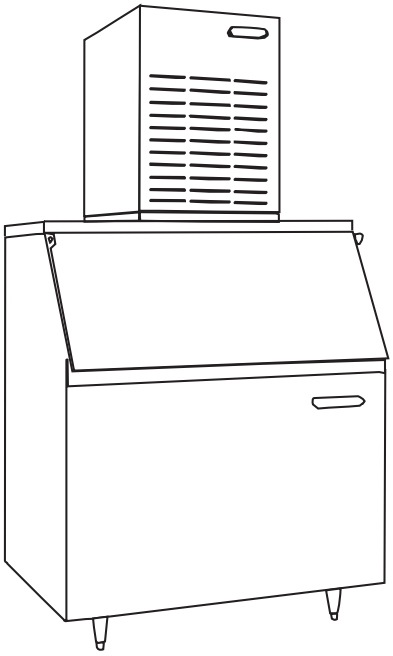

FME800 ON BH900*

***Bin Top Kit Required**

Location:

After uncrating and inspection, the unit is ready for installation. It is important that the machine be installed in a location where it has enough space around it to be accessible for service, and a minimum of 6" be allowed at the back for air circulation on air cooled models. Try to avoid hot, dirty and crowded locations. Be sure that the location for the machine is within the environmental limitations.

Storage Bin:

Tip the storage bin on its back, using parts of the carton to protect the exterior finish. Install the legs into the threaded holes in the bottom of the bin. Turn the leg levelers all the way in preparation for leveling later. Return the bin to the upright position, remove paper covering the bin gasket.

Note: Do not push bin into position, but lift it there. Pushing a bin, especially one with ice in it, can cause damage to the legs and the leg mounts.

Install the appropriate bin top on the bin, according to the instructions for the bin top.

Ice Maker:

The machine is heavy, so the use of a mechanical lift is recommended for lifting the machine high enough to install on top of the bin. After the unit is placed on the bin, line it up so it is even with the back side. Secure the machine to the bin with the hardware provided with the machine.

Remove the front panel and remove any shipping blocks.

Note: When placing 2 of these machines on a BH800 without the bin top, removal of the 2 service panels facing each other will make future service easier:

1. Remove the 2 top panel screws that will face each other.

2. Remove the 2 service panels that will face each other.

3. Add a strip of gasket, such as Scotsman part number 19-0503-04, to the 2 base edges that will face each other and around service panel space on the 2 panels that will face each other.

When the 2 machines are placed on the bin, the gaskets will seal the bin top area and the space between the machines.

Water Limitations:

An ice machine is a food manufacturing plant: it takes a raw material, water, and transforms it into a food product, ice. The purity of the water is very important in obtaining pure ice and in maximizing product life. This section is not intended as a complete resource for water related questions, but it does offer these general recommendations:

1. Check with a water treatment specialist for a water test, and recommendations regarding filters and treatment.

2. In most cases, the water used to make ice should be filtered or treated, depending upon the water. *There is no one type of water filter that is effective in all situations.* That is why a water test is important.

Note:

Scotsman Ice Systems are designed and manufactured with the highest regard for safety and performance. They meet or exceed the standards of UL, NSF, and CUL.

Scotsman assumes no liability or responsibility of any kind for products manufactured by Scotsman that have been altered in any way, including the use of any part and/or other components not specifically approved by Scotsman.

Scotsman reserves the right to make design changes and/or improvements at any time. Specifications and design are subject to change without notice.

FOR THE INSTALLER: Location

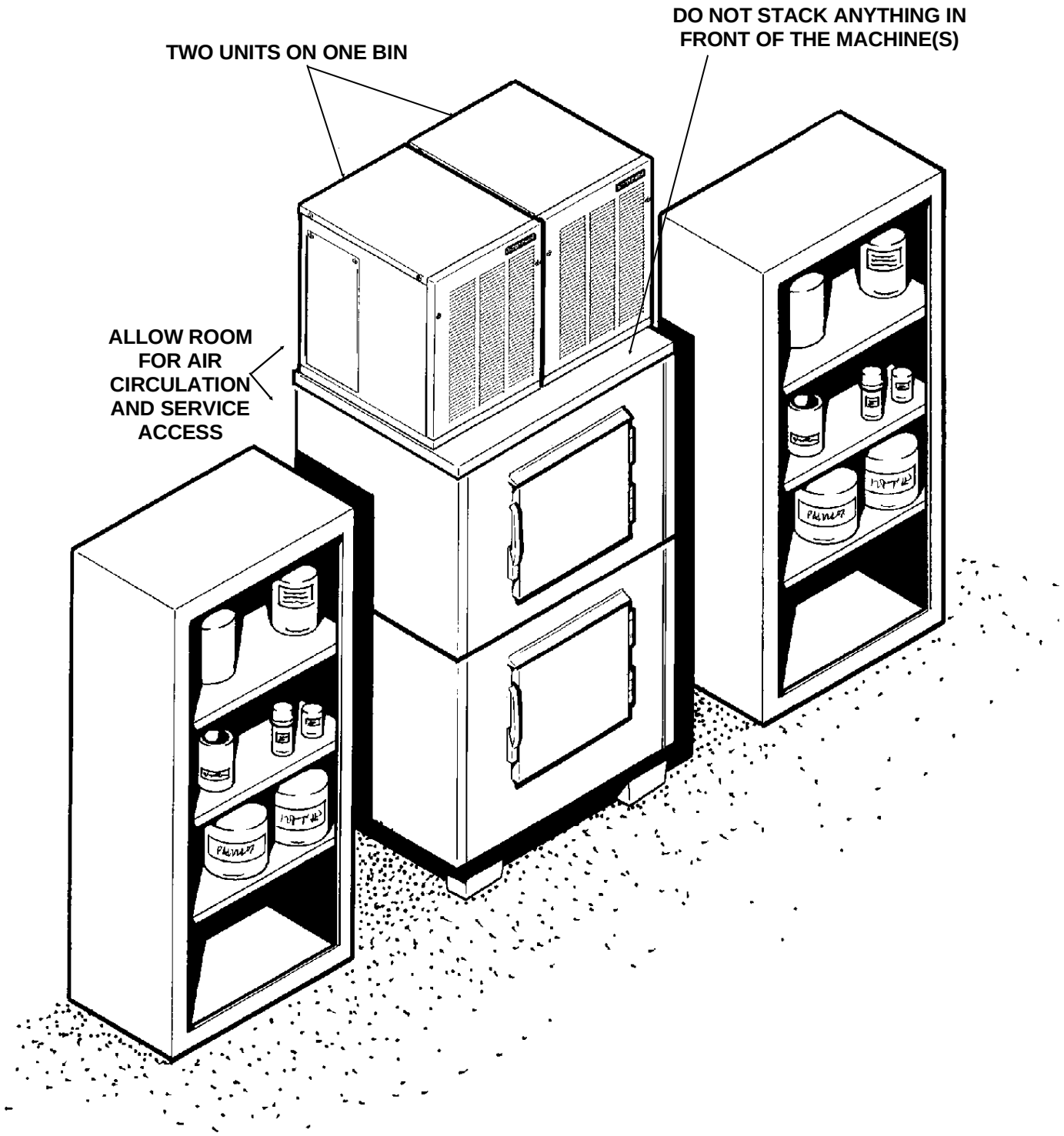

CONFORM TO ALL APPLICABLE CODES

Water Inlet

Air Cooled Models: The recommended water supply is clean, cold water. Use 3/8" O.D. copper tubing, connect to the 3/8" male flare at the back of the cabinet. Install a hand valve near the machine to control the water supply.

Water Treatment: In most areas, a water filter of some type will be useful. In areas where the water is highly concentrated with minerals the water should be tested by a water treatment specialist, and the recommendations of the specialist regarding filtration and/or treatment should be followed.

Water Cooled Models: A separate 3/8" O.D. copper line is recommended, with a separate hand valve to control it. It is connected to a 3/8" FPT condenser inlet at the back of the cabinet. The water pressure to all lines must always be above 20 psig, and below 80 psig.

Drains

Air Cooled Models: There is one 3/4" FPT drain at the back of the cabinet, the drain line is of the gravity type, and 1/4 inch per foot fall is an acceptable pitch for the drain tubing. There should be a vent at the highest point of the drain line, and the ideal drain receptacle would be a trapped and vented floor drain. Use only 3/4" rigid tubing.

Water Cooled Models: In addition to the above mentioned drain, a separate condenser drain must be installed. Connect it to the 1/2" condenser drain connection at the back of the cabinet.

Storage Bin: A separate gravity type drain needs to be run, similar to the air cooled drain. Insulation of this drain line is recommended.

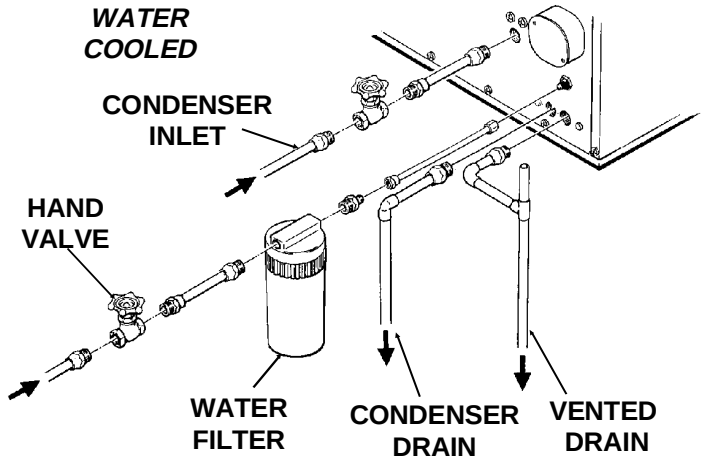

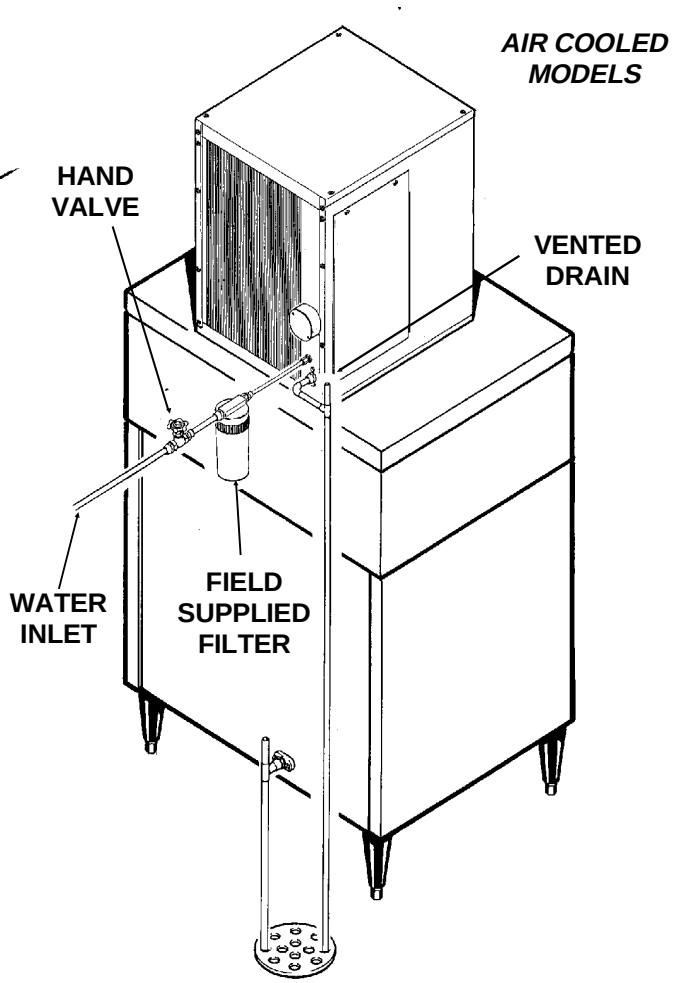

FOR THE ELECTRICIAN

CONFORM TO ALL APPLICABLE CODES

The electrical power to the unit is supplied through the junction box at the rear of the machine.

Check the nameplate (located on the back panel) for the voltage requirements, and for the minimum circuit ampacity. The machine requires a solid chassis to earth ground wire.

The ice maker should be connected to its own electrical circuit so it would be individually fused. Voltage variation must remain within design limitations, even under starting conditions.

All external wiring must conform to national, state, and local electrical codes. The use of a licensed electrician is required to perform the electrical installation.

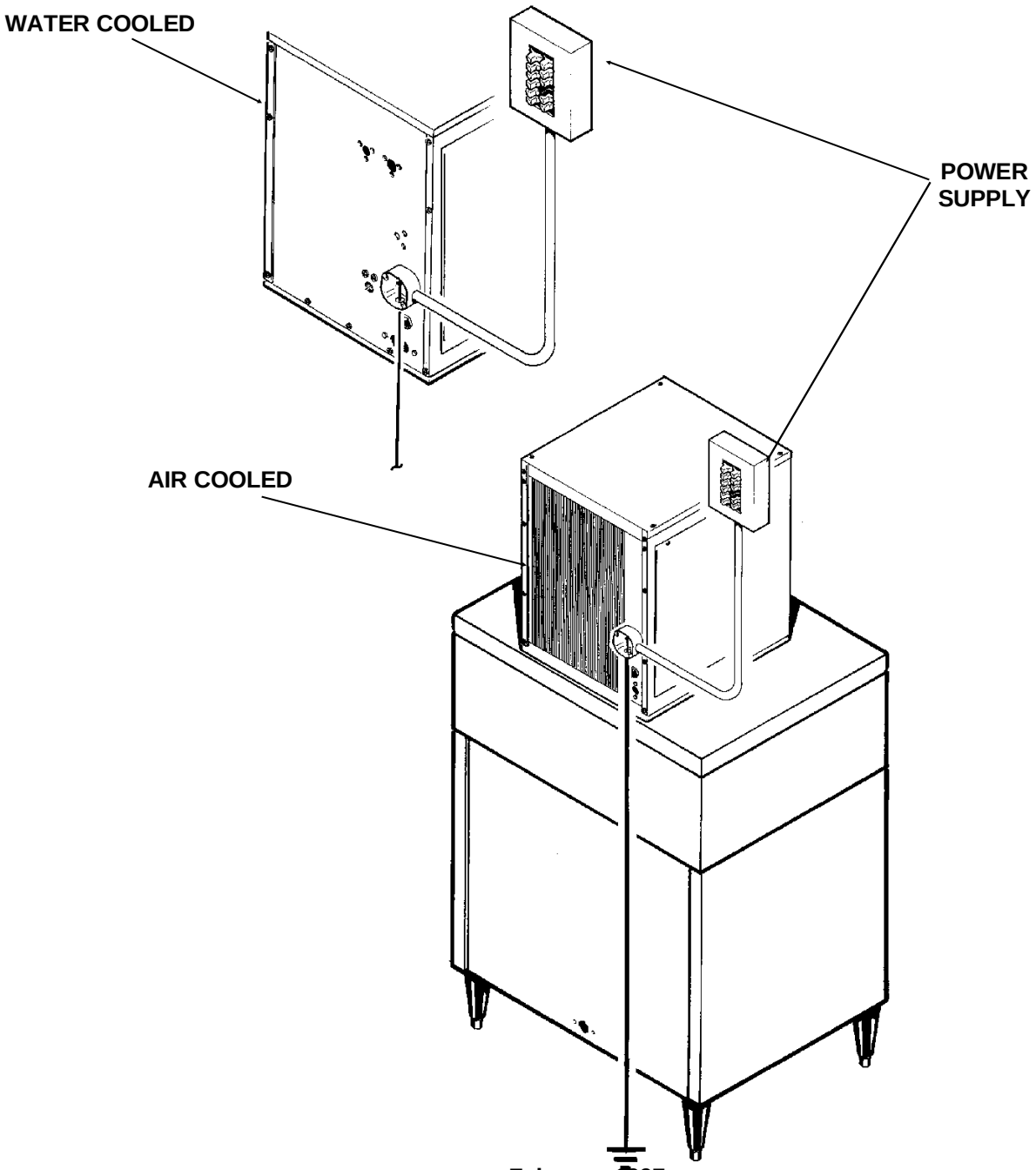

Final Check List

1. Is the ice system installed indoors in a location where the air and water temperatures are controlled, and where they do not exceed the design limitations?

2. Is there an electrical service disconnect within sight of the installed machine? Has the voltage been checked, and compared to nameplate requirements?

3. Have all the plumbing connections been made and checked for leaks?

4. Has the machine and bin been leveled?

5. Is there a minimum of 6" clearance at the back of the machine for proper service access and air circulation?

6. Is the water pressure a minimum of 20 psig?

7. Has the machine been secured to the bin?

8. Is there clearance over the top of the machine for service access?

9. Is there a water shut off valve installed near the machine?

10. Have all of the shipping blocks been removed?

Pre-Start Inspection

1. Remove the front and side service panels.

2. Check that the styrofoam shipping blocks have been removed.

3. Inspect the interior of the machine for loose screws or wires. Check that no refrigerant lines are rubbing each other. Check that the fan blade turns freely (air cooled).

4. Check that the unit is installed correctly according to the final check list (page 8).

Start Up

1. Go through the prestart inspection.

2. Open the hand valve, observe that water enters the water reservoir, fills the tube from the reservoir to the evaporator, and then shuts off. Check for leaks.

3. Switch the master switch on.

The electrical start up sequence is now on automatic.

A. There should be a short (15 second) delay before the gearmotor starts.

B. After the gearmotor starts, the compressor will start.

4. On air cooled models, the condenser will begin to discharge warm air, on water cooled models, the water regulating valve will open, and warm water will be discharged into the drain.

5. The unit should soon be making ice, if desired, the low side pressure can be checked: it should be 34 psig + or - 4 psig.

The suction line temperature at the compressor is normally very cold, nearly to the point of frost up to the compressor body, but not on it.

The air cooled discharge pressure will depend upon air and water temperatures, but should be between 220 psig and 300 psig.

The water cooled discharge pressure should be constant at about 245 psig.

The above numbers are for new, clean machines, you can expect to see some values higher, and some lower between different units.

6. **THERE ARE NO ADJUSTMENTS TO MAKE**, so replace the panels.

7. Clean and/or sanitize the storage bin interior, wipe off the exterior with a clean, damp cloth.

8. Give the owner/user the service manual, instruct him/her in the operation of the unit, and make sure they know who to call for service.

9. Fill out the manufacturers registration card, and mail it to the Scotsman Factory.

10. Fill out the field quality audit form, and mail it to the Scotsman factory.

NME650 & FME800

COMPONENT DESCRIPTION

Control Box: Contains the electrical controls that operate the machine.

High Pressure Cut Out Switch: A manual reset switch sensing the high side refrigeration pressure. It is set to shut the machine off if the discharge pressure should ever exceed 450 psig.

Compressor: The refrigerant vapor pump.

Reservoir: Float operated, it maintains the water level in the evaporator at a constant level, it also contains the water level sensor.

Water Level Sensor: Senses if there is water in the reservoir to make ice out of. Will shut the machine off it there is no water.

Ice Discharge Chute: Directs the ice produced by the evaporator into the storage bin.

Ice Level Sensor: An electronic “eye”, it senses the presence of ice in the bottom of the ice discharge chute. Operates to turn the ice machine on and off automatically as the level of ice in the bin changes.

Gear Motor: An oil filled, speed reduction gearbox, driving the auger.

Condenser: Air or water cooled, where the heat removed in ice making is discharged.

Expansion valve: The refrigerant metering device.

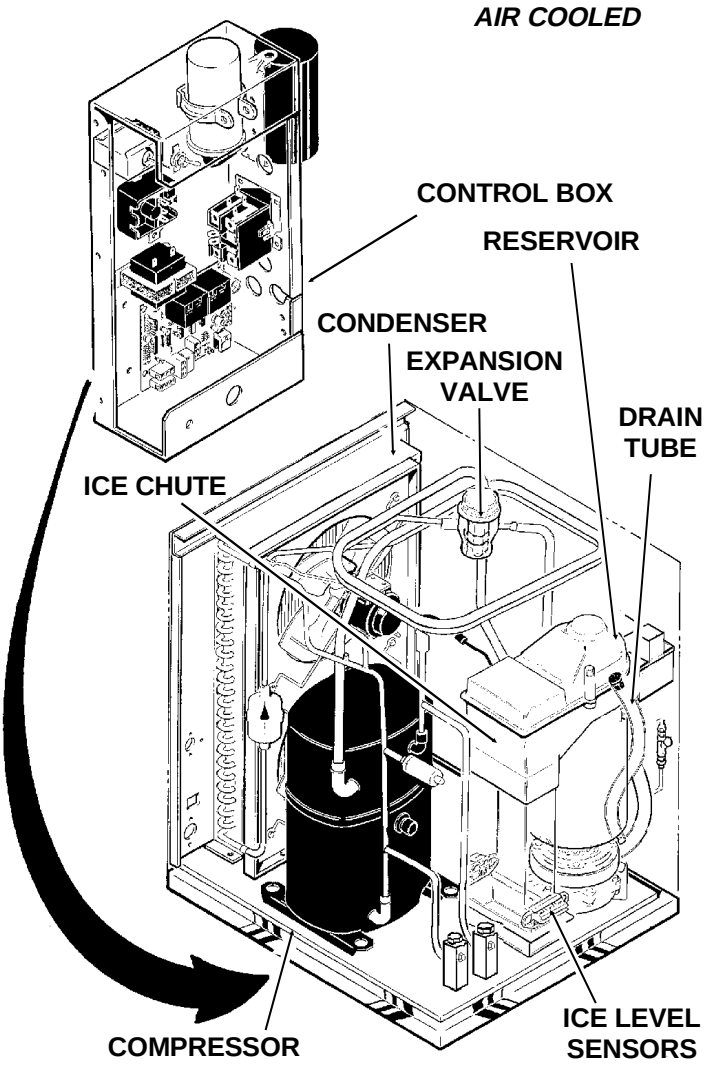

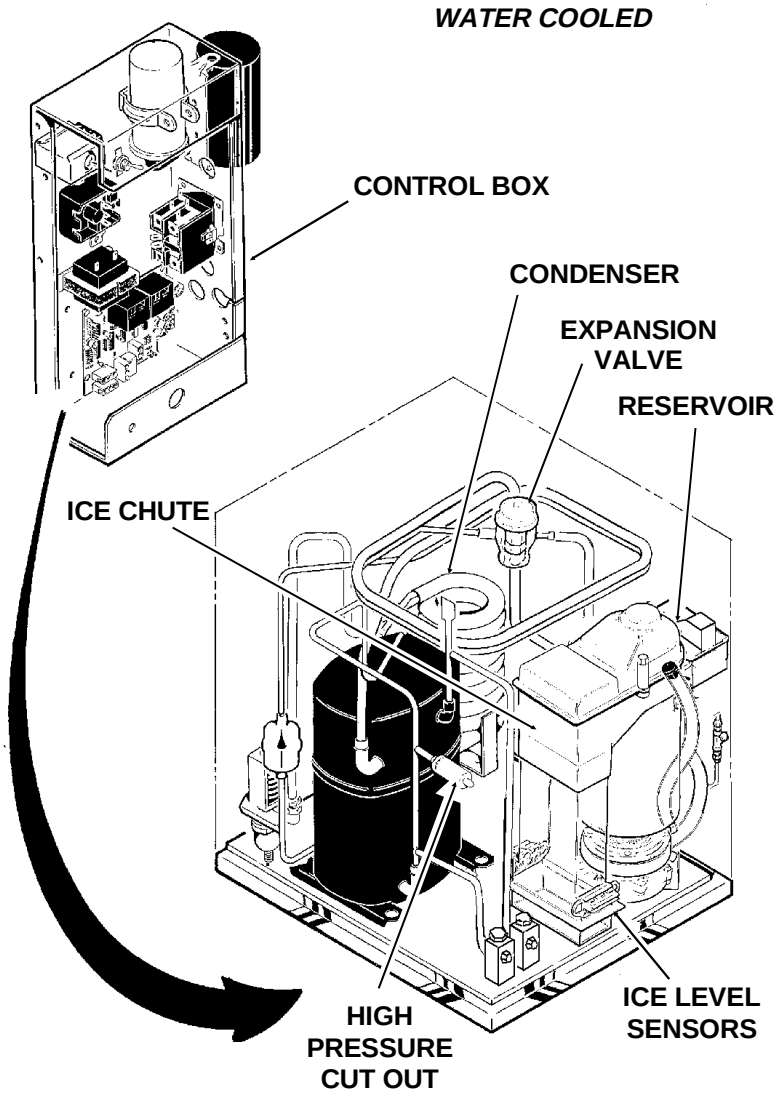

COMPONENT DESCRIPTION: Control Box

Contactor: A definite purpose contactor connecting the compressor to the power supply.

Circuit Board

The circuit board receives input signals from several sensors and translates them to control the electrical power supply to the various loads.

The sensors include:

- Electric eyes to check the ice level in the bin.
- A thermistor to check the water level in the reservoir.
- Amp draw of the gearmotor.

The loads include:

- Compressor contactor
- Fan motor
- Auger drive motor

Low Pressure Cut Out Switch

A manual reset control that shuts off the ice machine when the low side pressure drops below a preset point, 0-4 psig.

Potential Relay: The compressor start relay.

On/Off Switch: Manual control for the machine.

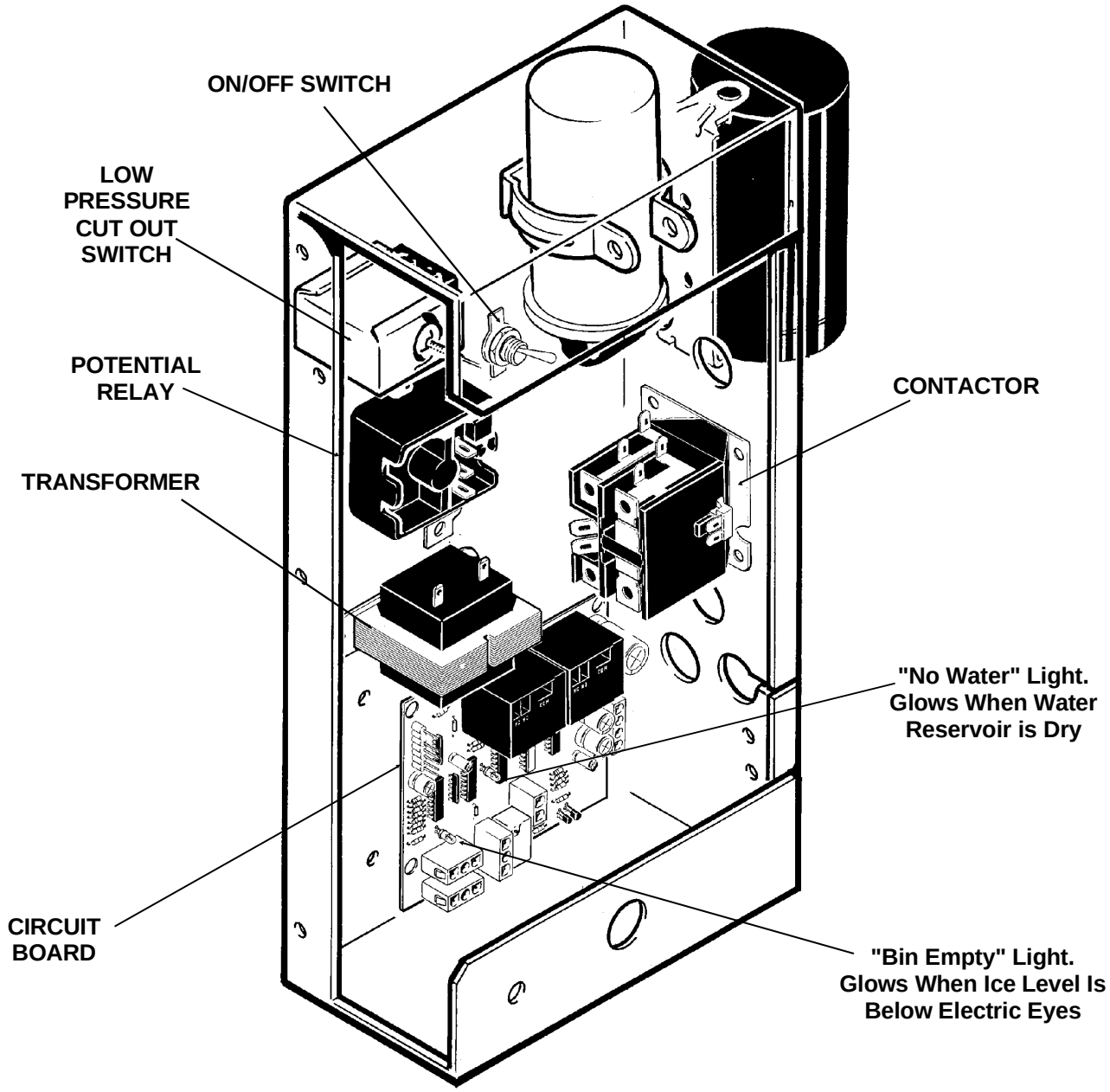

NME650 & FME800

COMPONENT DESCRIPTION

Evaporator: A refrigerated vertical tube filled with water and containing a water seal and auger.

Auger: A solid stainless steel double spiral auger, it pushes the ice crystals up to the top of the evaporator.

Water Seal: A two part "face" seal, the top half rotating with the auger, the bottom half stationary, the sealing action being where the two seal "faces" meet.

Ice Sweep: A plastic cap with "fingers". It revolves with the auger to "sweep" the ice into the ice chute.

Breaker: Where the ice is compressed and much of the extra water is squeezed out of it before it is discharged into the bin.

Motor: A motor that drives the gear reducer.

Thrust Bearing: As the ice is pushed up the evaporator, the auger is thrust down, and pressure from the auger thrust is taken up by this bearing.

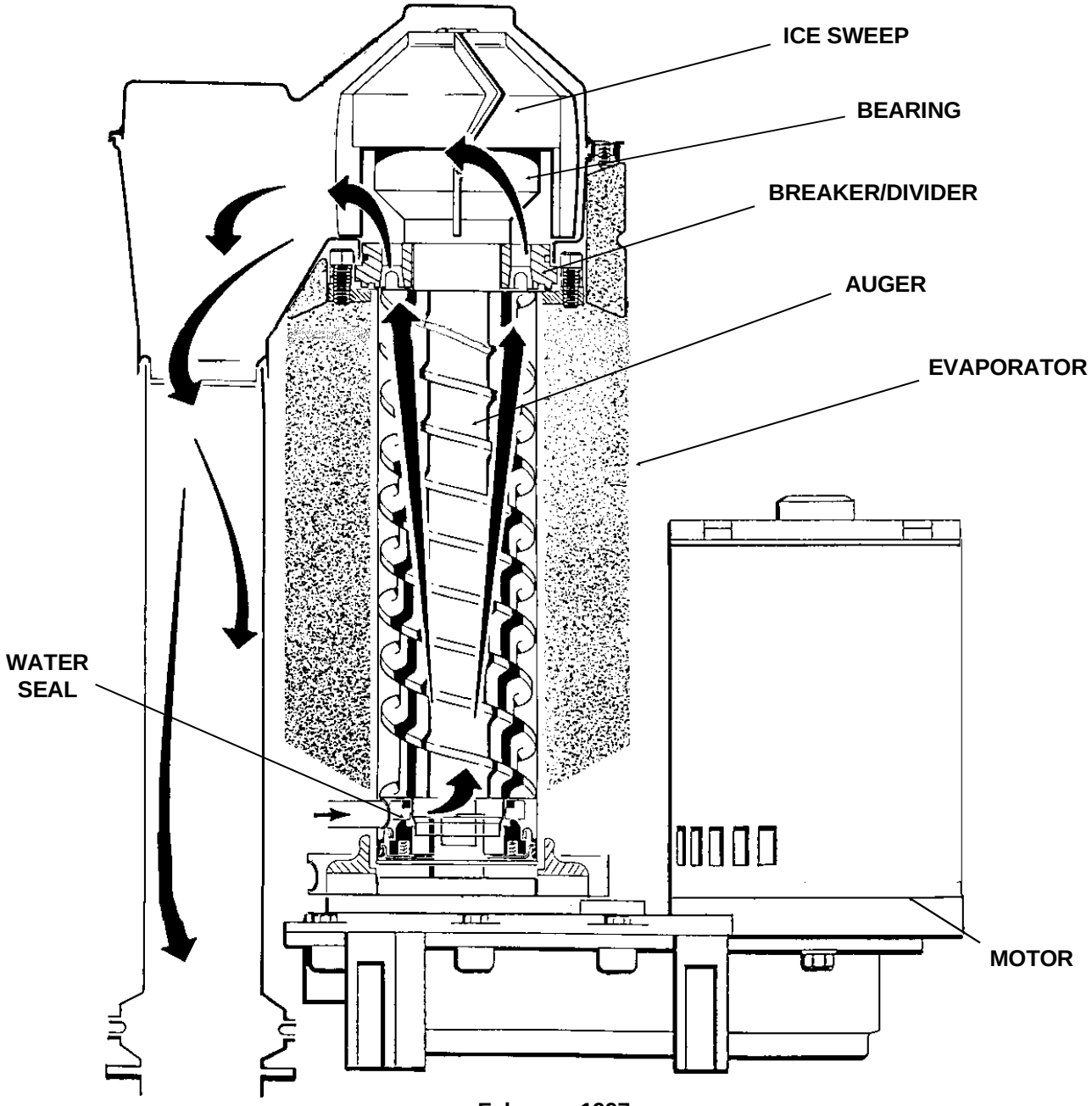

ELECTRICAL SEQUENCE:

Refer the wiring diagram as needed.

If the machine is switched off at the master switch, but is otherwise ready to go, switching the master switch to on does the following:

- The bin empty light on the circuit board goes on
- There is a 15 second delay
- If there is enough water in the reservoir, the circuit board will allow the machine to start up.

Start up consists of:

- The compressor relay and auger motor relay become energized, connecting power to the windings of the auger motor.
- The auger motor starts, and the centrifugal switch closes, connecting power to the compressor contactor coil.
- The contactor is energized, connecting power to the compressor, and the compressor starts.
- As ice goes past the ice level sensors, the bin empty light will stay on, and the machine will continue to run, unless the ice stays between the sensors for more than 15 seconds (bin full). At that point, the bin empty light goes out, and the machine shuts down.

Shut Down consists of:

- The compressor relay opens.
- The compressor contactor opens
- The compressor stops
- The auger motor is run by the circuit board for 2 more minutes, clearing out ice in the evaporator, and then
- The auger motor relay opens, and the auger motor stops.

If the ice level sensor is clear (bin empty) for more than 15 seconds, the machine will start up again.

Another purpose of the circuit board is to turn the machine off if there is not enough water in the machine.

- When the water level in the reservoir falls below the water level sensor, the machine will “shut down”
- When the water refills the reservoir, the machine will start up again.

Separate from the circuit board:

- If the high pressure control (cut out switch) opens, the machine will stop immediately (through the relays on the circuit board). It must be manually reset at the control.
- If the low pressure control (cut out switch) opens, the machine will stop immediately (through the relays on the circuit board). It must be manually reset at the control.
- The master switch is the manual control for the complete machine, but it is not a service disconnect.

OPERATION: Water

Water enters the machine through the 3/8" male flare at the rear of the cabinet, goes to a strainer and then to the water reservoir which it enters through the float valve. The water then goes out the bottom of the reservoir tank to the bottom of the evaporator.

Water Level: The correct water level should be checked when the machine is making ice. Check the water level in the reservoir and compare it to the horizontal line molded into the side of the reservoir. The correct level should be between ⅛" above and ¼" below the line. If needed, bend the float arm up or down to adjust the water level.

Reservoir overflow or evaporator condensation is routed to the drain. Water cooled models have a separate water circuit for the cooling water: it enters the fitting at the rear, goes to the water regulating valve, then to the water cooled condenser and down the drain.

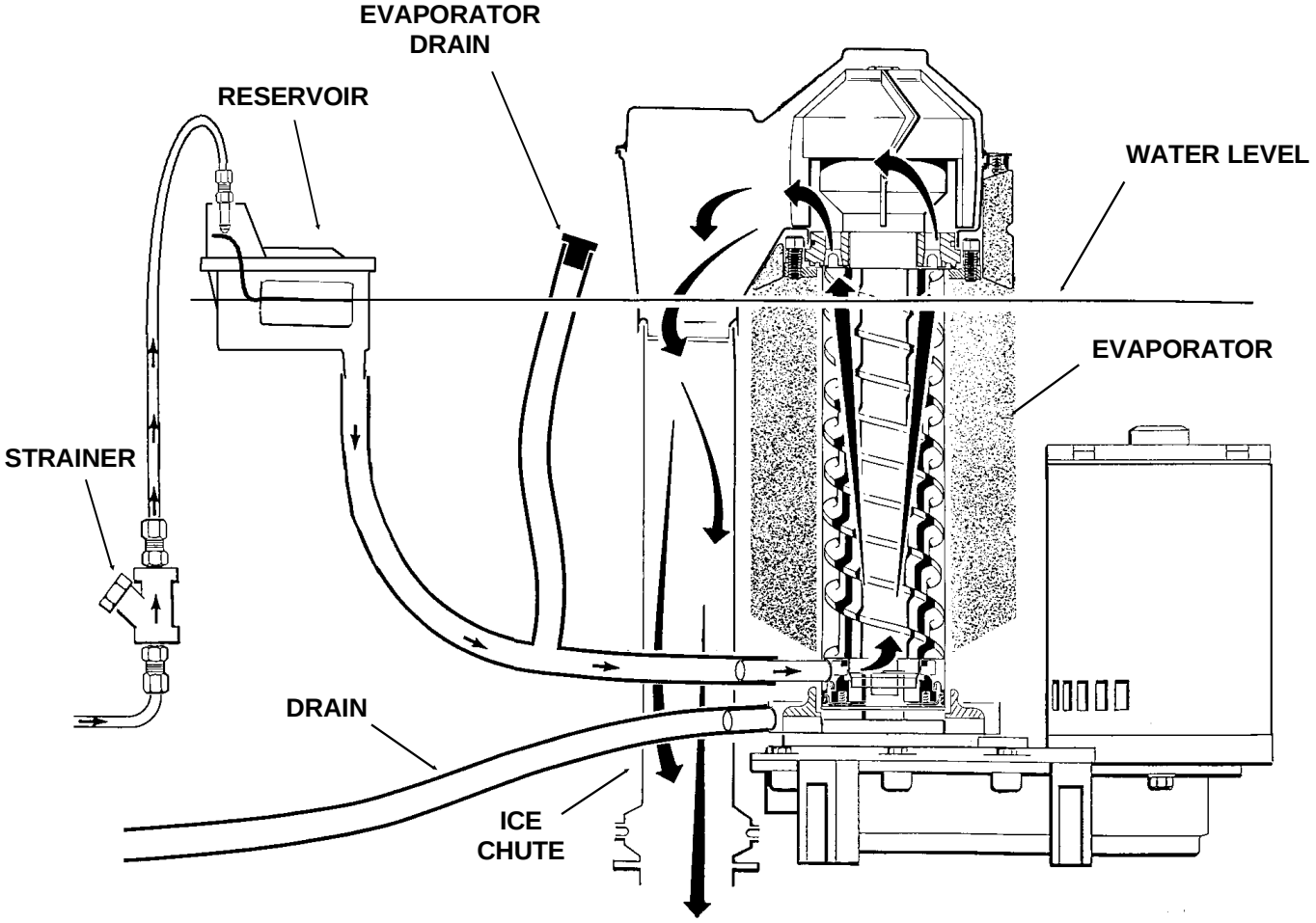

WATER SCHEMATIC

OPERATION: Refrigeration

Beginning at the compressor, the refrigerant is compressed into a high temperature gas. The discharge line directs this gas to the condenser. At the condenser (air or water cooled) the gas is cooled by either air or water and it then condenses into a liquid. This high pressure liquid then goes through the liquid line to the expansion valve.

The thermostatic expansion valve meters liquid refrigerant into the evaporator, the volume of liquid refrigerant depending upon the temperature of the evaporator.

At the evaporator, the refrigerant enters an area of relatively low pressure, where it can easily "boil off" or evaporate. As it evaporates, it absorbs heat from the evaporator and whatever is in contact with it (such as the water inside it). After the evaporator, the refrigerant, now a low pressure vapor, goes through the suction line back to compressor, where the cycle is repeated.

Refrigeration Schematic

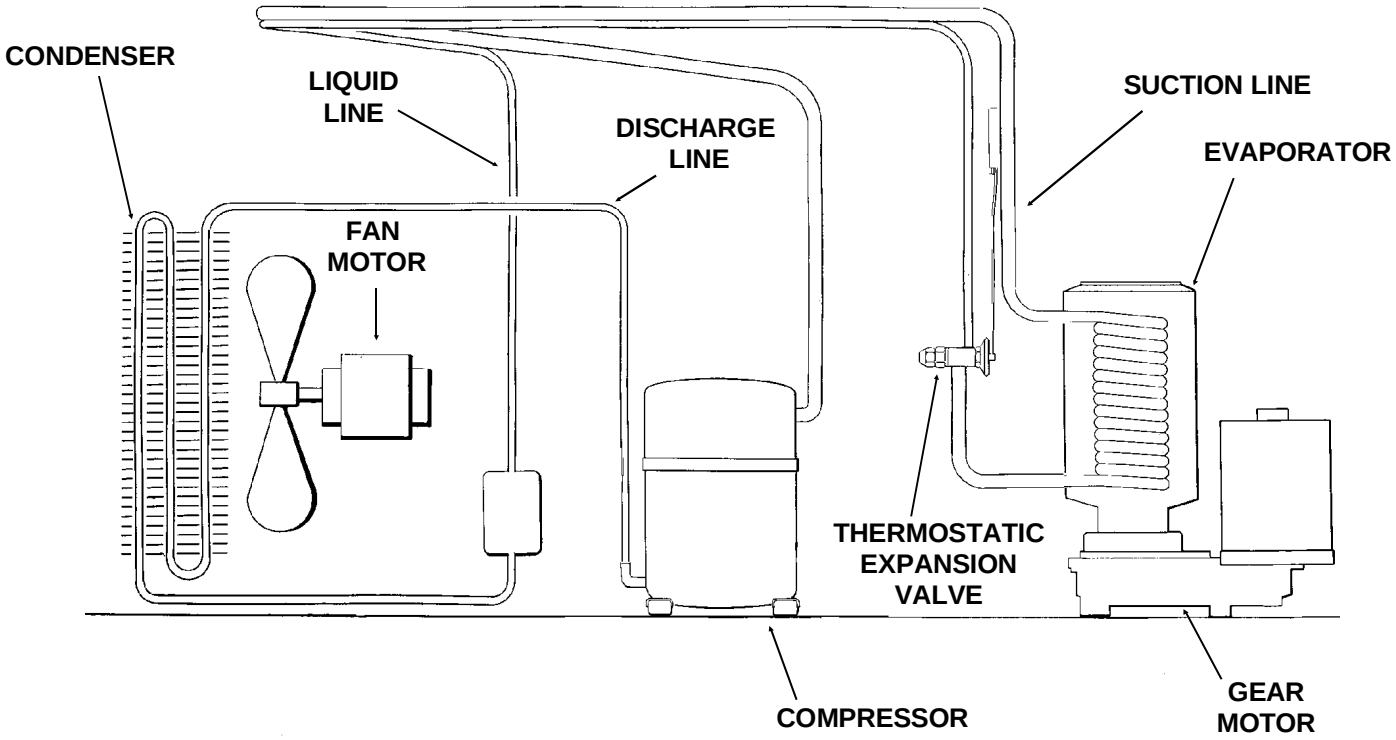

OPERATION: Performance

Typical Low Side Pressure
- Air Cooled: 34 - 38 PSIG
- Water Cooled: 32 PSIG

Typical Discharge Pressure
- Air Cooled: 220 - 300 PSIG
- Water Cooled: 245 PSIG

Typical Compressor Amp Draw
- 8 -9

Typical Gearmotor Amp Draw
- 3.1 to 3.5

Superheat
- 5 - 7 degrees

High Pressure Cut Out
- 450 PSIG

Low Pressure Cut Out
- 0 - 4 PSIG

Fan Motor Watts
- 35 Watt

Refrigerant Charge
- Air Cooled: 24 ounces HP62
- Water Cooled: 20 ounces of HP62.

CLEANING & SANITIZING

A Scotsman Ice System represents a sizable investment of time and money in any company's business. In order to receive the best return for that investment, it MUST receive periodic maintenance.

It is the USER'S RESPONSIBILITY to see that the unit is properly maintained. It is always preferable, and less costly in the long run, to avoid possible down time by keeping it clean; adjusting it as needed; and by replacing worn parts before they can cause failure. The following is a list of recommended maintenance that will help keep the machine running with a minimum of problems.

Maintenance and Cleaning should be scheduled at a **minimum of twice per year.**

Note: Electrical power will be ON when doing in place cleaning.

ICE MAKING SYSTEM: In place cleaning

1. Check and clean any water treatment devices, if any are installed.
2. Remove screws and the front and top panels.
3. Move the ON-OFF switch to OFF.
4. Remove all the ice from the storage bin.
5. Remove the cover to the water reservoir and block the float up.
6. Drain the water reservoir and freezer assembly using the drain tube attached to the freezer water inlet. Return the drain tube to its normal upright position and replace the end cap.
7. Prepare the cleaning solution: Mix eight ounces of Scotsman Ice Machine Cleaner with three quarts of hot water. The water should be between 90-115 degrees F.

⚠WARNING

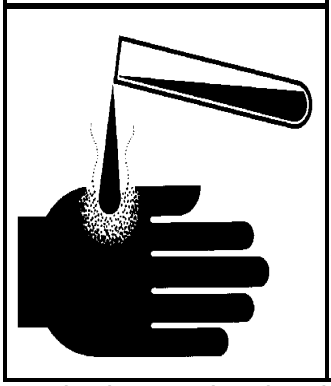

Scotsman Ice Machine Cleaner contains acids. These compounds may cause burns.
If swallowed, DO NOT induce vomiting. Give large amounts of water or milk. Call Physician immediately. In case of external contact, flush with water.
KEEP OUT OF THE REACH OF CHILDREN.

8. Slowly pour the cleaning solution into the water reservoir until it is full. Wait 15 minutes, then switch the master switch to ON.
9. As the ice maker begins to use water from the reservoir, continue to add more cleaning solution to maintain a full reservoir.
10. After all of the cleaning solution has been added to the reservoir, and the reservoir is nearly empty, switch the master switch to OFF.
11. Drain the water reservoir and freezer assembly using the drain tube attached to the freezer water inlet. Return the drain tube to its normal upright position and replace the end cap. Wash and rinse the water reservoir.

Sanitizing:

To sanitize, use an approved sanitizing solution or mix one ounce of household bleach to 2 gallons of warm (95°F.-115°F.) water. Repeat steps 8-11 using the sanitizer solution in place of the cleaning solution.

12. Remove the block from the float in the water reservoir.
13. Switch the master switch to ON
14. Continue ice making for at least 15 minutes, to flush out any cleaning solution.

//

DO NOT USE any ice produced from the cleaning solution.

Be sure no ice remains in the bin.

//

15. Remove all ice from the storage bin.
16. Add warm water to the ice storage bin and thoroughly wash and rinse all surfaces within the bin.
17. Sanitize the bin interior with an approved sanitizer using the directions for that sanitizer.
18. Replace the panels.

MAINTENANCE AND CLEANING

1. The bin control uses devices that sense light, therefore they must be kept clean enough so that they can “see”. At least twice a year, remove the bin control sensors from the base of the ice chute, and wipe the inside clean, as illustrated**.**

2. The ice machine senses water level by a probe located in the water reservoir. At least twice a year, the probe should be removed from the reservoir, and the tip wiped clean of mineral build-up.

4. Check and tighten all bolts and screws.

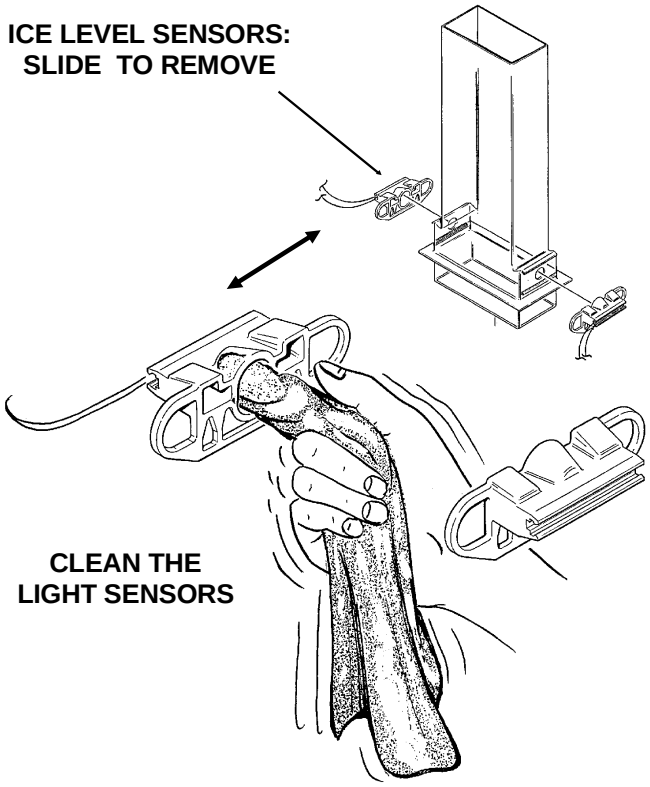

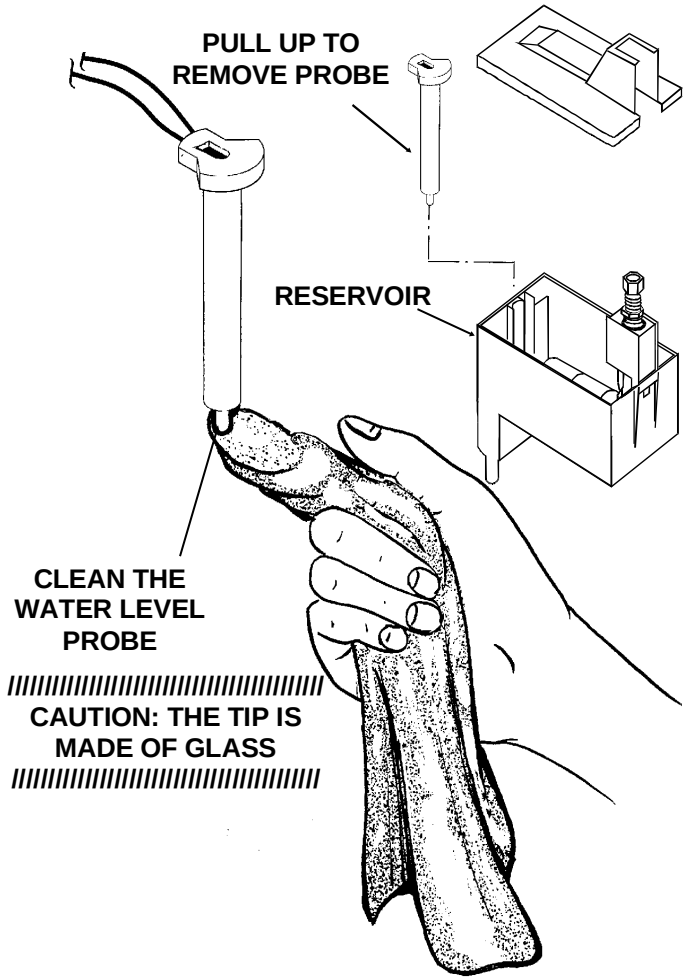

⚠WARNING

Moving Parts Hazard.
Rotating parts can cause personal injury.
Disconnect electrical power before beginning.

3. The bearing in the breaker should also be checked at least **two times per year**.

A. Check the bearing by:

- switching the machine OFF
- removing the ice chute cover
- unscrewing the ice sweep
- removing the water shed
- unscrewing the breaker cover.
- unscrewing the auger stud

Inspect the assembly, looking for wear.

See Removal and Replacement to replace bearing or seals. Reverse to reassemble.

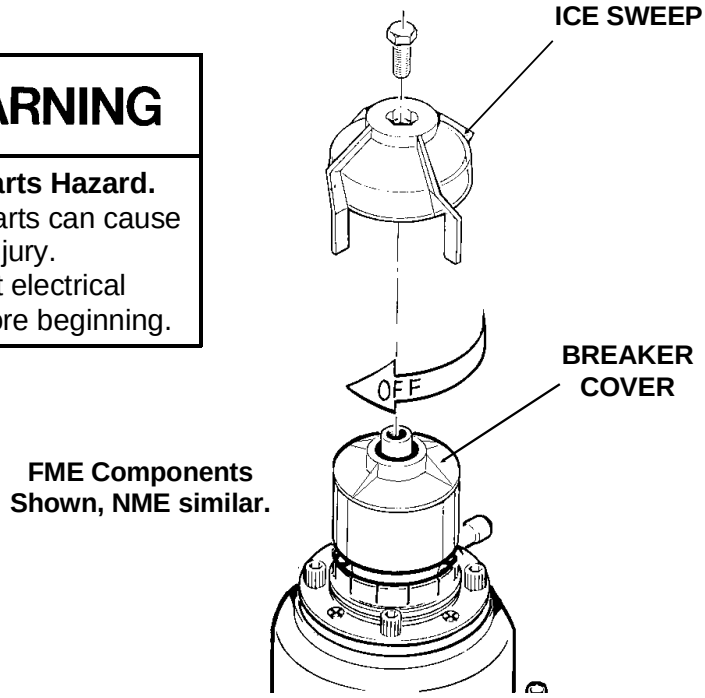

FME Components Shown, NME similar.

⚠WARNING

Hazardous Moving Parts.
Moving fan blade can cause personal injury. Disconnect electrical power before beginning.

5. Clean the air cooled condenser.

The air flow on this model is from front to back, so the inside of the machine will have to be available to clean the air cooled condenser. Use a vacuum cleaner or coil cleaner if needed. Do NOT use a wire brush.

A. Disconnect electrical power, and remove the filter. The filter may be cleaned or replaced.

B. Clean the condenser: the condenser may appear to be clean on the surface, but it can still be clogged internally. Check with a flash light from the front to see if light can be seen though the condenser fins. Reverse to reassemble.

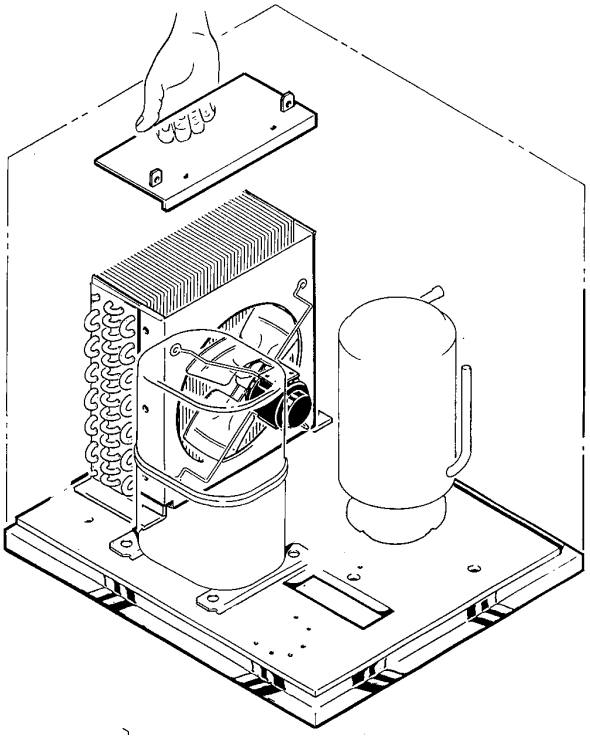

Step 2: Remove the top portion of the fan shroud.

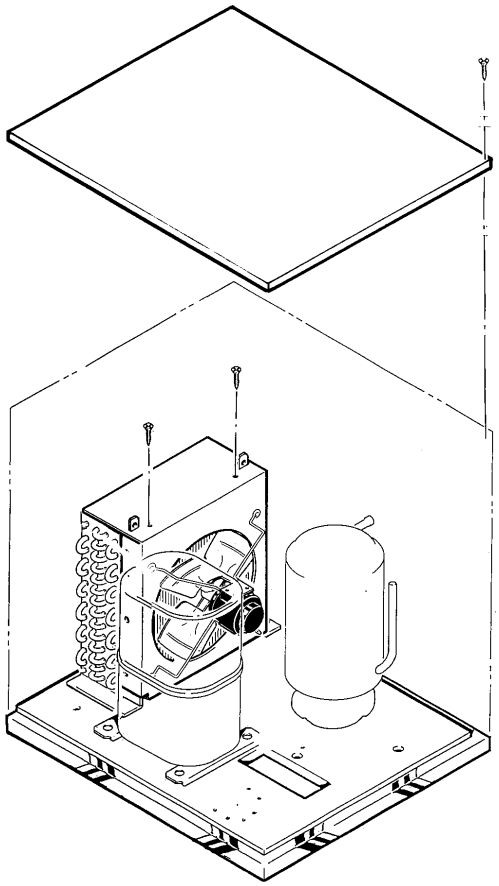

Step 1: Remove the top panel.

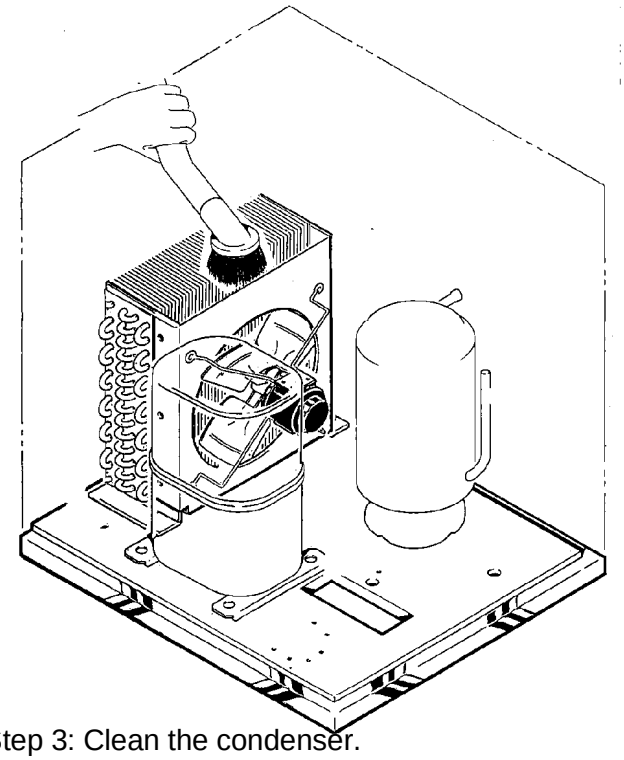

Step 3: Clean the condenser.

MAINTENANCE AND CLEANING: Auger

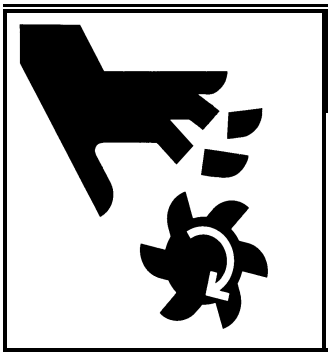

⚠WARNING

Hazardous Moving Parts.
Moving auger can cause personal injury. Disconnect electrical power before beginning.

In some areas, the water supply to the ice maker will contain a high concentration of minerals, and that will result in an evaporator and auger becoming coated with these minerals, requiring a more frequent removal than twice per year. If in doubt about the condition of the evaporator and auger, the auger can be removed so the parts can be inspected.

Note: Water filters can filter out suspended solids, but not dissolved solids. “Soft” water may not be the complete answer. Check with a water treatment specialist regarding water treatment.

For more information on removal of these parts, see REMOVAL AND REPLACEMENT.

1. To remove the auger, remove the front and top panels.
2. Push bail clamp back from the top of the chute cover.

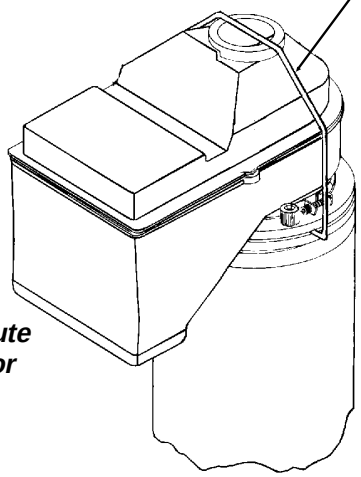

Assembled Chute and Evaporator

3. Unscrew and remove ice sweep.
4. Remove 4 allen screws holding breaker to evaporator.
5. Pull up to remove auger.

After the auger has been removed, allow the auger to dry: if the auger is not bright and shiny, it must be cleaned.

Clean the auger and evaporator as required. DO NOT HONE THE EVAPORATOR.

7. Replace the water seal.
8. Reverse to reassemble.

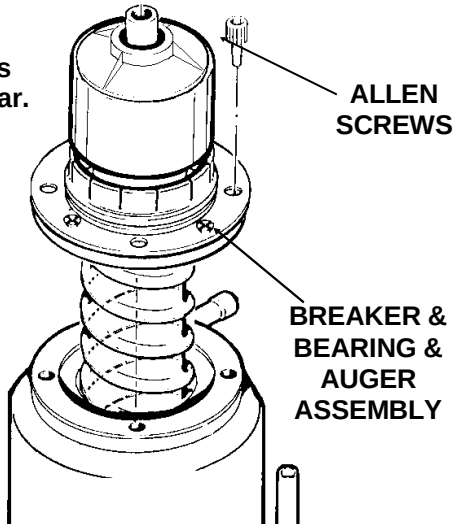

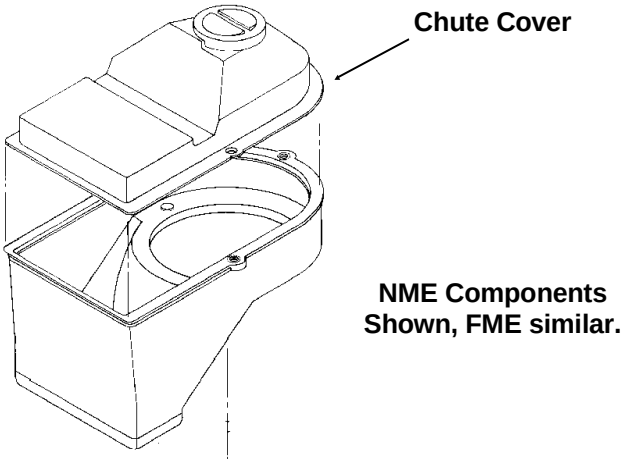

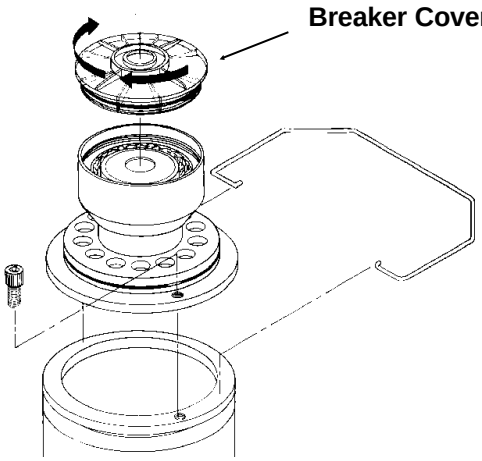

SERVICE DIAGNOSIS: Condition - No Ice Being Produced

STATUS: *NOTHING OPERATES*

A. Check**: Voltage** to the unit, restore it if there is none. Compare to the nameplate.

B. Check**:** The **master switch**, switch ON if off.

C. Check**:** The reset switches, (high and low pressure): depress and release each switch. If the still does not start, check the high and low side pressures.

D. Check the **low pressure cut out,** if closed, go to **E;** if open, it could be due to**:**

- Low refrigerant charge
- The auger not turning
- Restricted system
- TXV not opening

1. Check the low side pressure, the low pressure cut out opens at pressure below 4 psig. If open, reset and:

a. Check if the **auger** is turning, if it is not, remove the **gearbox** and:

Check for internal damage, repair and replace in the machine.

b. Check for low charge, add some refrigerant, if the unit will operate,(normal low side pressure being about 32-34 psig) stop and look for a leak, repair, replace the drier, evacuate, and weigh in the nameplate charge. If, with added charge, the unit does **not** operate:

Check for a restricted system, replace the drier, evacuate, and weigh in a nameplate charge.

Check for a **Thermostatic Expansion Valve** that does not open, if defective, replace it. Replace the drier, evacuate, and weigh in the nameplate charge.

E. Check the **high pressure cut out,** if closed go to **F**; if open check:

1. The pressure control opens at 450 psig. **Check** the high side pressure, reset the control, and observe: on water cooled, that water soon begins to flow from the condenser drain; or, on air cooled, that the fan is forcing air through the condenser. If the unit trips out on pressures below 450 psig, replace the control. If the pressures rise above the trip out point, and the unit shuts down:

a. Check for adequate water flow on water cooled, if adequate, clean the interior of the condenser. If the pressures are still too high replace the water regulating valve.

b. Check for adequate air flow on air cooled. Clean the condenser and (if used) the filter. If the air flow is poor because of the installation, advise the user that the unit should be moved, or the air around it kept cooler.

Check the fan motor for tight bearings and proper rotation.

Check that the fan blades are clean, and the fan secure to the fan motor shaft.

F. Check the **water level** in the reservoir. The machine must have enough water in the reservoir.

1. Restore/adjust water level. See the next step.

SERVICE DIAGNOSIS: Condition - No Ice Being Produced

STATUS: *NOTHING OPERATES*

G. Check: The gear **motor**, the motor must turn at full speed or the compressor contactor will not pull in. If the motor will not turn fast enough, check the auger and evaporator for scale build up.
If no power to the motor:

Check**:** The **indicator lights** on the circuit board, the **bin empty** light should be ON, the **no water** light should be OFF **.**

1. If the **bin empty** and **no water** lights are off, check the **transformer**.
   a. Transformer "load" side should have 12 to 15 volts. If not, check the "line" side. The line side should be at line voltage. If the line side has the correct voltage and the load side does not, replace the transformer.
2. If the transformer is good, and the **bin empty** light is OFF, check the **ice level sensors**.
   a. Remove sensors by sliding them sideways out of the ice chute. Visually inspect them, clean if needed.
   b. Look through the ice chute "eye" hole for something blocking the ice chute.
   c. If the unit still does not run, replace the ice level sensors.
   d. If the bin empty light is still OFF, check the **circuit board**.
      See the instructions at the end of the manual. If the machine operates with the tester, and not by itself, the ice level sensors should be replaced.
3. If the transformer is fine, and the "no water" light is ON, check the **water level sensor.**
   a. Check the water level in the **reservoir,** restore if low. If the water level is ok:
   b. Remove the water level sensor from the reservoir and clean the tip if dirty.
   CAUTION: THE TIP IS MADE OF GLASS
   c**.** Replace the water level sensor. If the no water light is still on, check that the "water sen" plug is firmly plugged into the circuit board.
   d. If the no water light is still on, check the circuit board:
      1. Unplug the "water sen" connector from the circuit board.
      2. Plug "water sen" connector from the Scotsman Electronic Control tester into the circuit board.
         a. Move the water switch on the tester to "no water" and the no water light on the circuit board should go on. If not, replace the board.
         b. Move the water switch to the "water" position, the no water light should go off and after 15 seconds, the machine should start, if not, replace the circuit board.
         If the machine works with the tester, and not by itself, replace the water level sensor.

MORE INFORMATION ON THE TESTER CAN BE FOUND AT THE END OF THE MANUAL.

Check the gearmotor relay on the circuit board.
If the bin empty light is on, and the water level light is off, there should be power (after 15 seconds) at the com. terminal of the gearmotor relay, if not, replace the circuit board.

STATUS: *GEARMOTOR OPERATES, COMPRESSOR DOES NOT*

A. Check the **compressor relay.**

The relay is on the circuit board, if it does not supply power to the contactor coil, the compressor will not run.

1**.** Check for power at the contactor coil, if none:

a. Check for power at the compressor relay at the circuit board.
If there is power at the relay, but none at the contactor coil,
Check for an open wire between the relay and the contactor.

2**.** Check the contactor coil. If the coil is open, replace the contactor.

3**.** Check the auger drive motor centrifugal switch. If, when the drive motor is running, contact 4 (black wire removed) has no power, and all of the above switches have been checked, replace the centrifugal switch, or the drive motor.

4**.** If the compressor relay on the circuit board has power on the NO contact, but not on the COM contact, replace the circuit board.

B. **Check the compressor**

1. Check the compressor start relay.
2. Check the start capacitor.
3. Check the windings of the compressor for open windings or shorts to ground.

Replace those items found defective.

SERVICE DIAGNOSIS: Condition - Low Ice Production

STATUS: *EVERYTHING IS OPERATING*

A. Check the air cooled condenser for dirt. Clean as required. Check the head pressure on water cooled. Adjust as required. If the head pressure is very high:

1. Air cooled. Check for high air temperatures, or restrictive air flow. Correct as needed.
2. Water cooled. Check for high water temperatures, or low water pressure. Correct as needed.
3. The refrigerant may contain non condensable gases, purge, evacuate, and recharge per nameplate.

B. Check the evaporator

1. Clean the evaporator, the mineral build up will adversely affect the ice machines production.
2. Check the evaporator for water leaks, replace the water seal if found to be leaking.
3. Check the low side pressure; normal is about 32-34 psig. If low, assume a refrigerant leak, locate, repair and recharge.

   If no leak, the TXV may be restricted, defective or not adjusted properly. If needed, replace the TXV, evacuate, and recharge per nameplate.
4. Check the insulation on the evaporator. It should be dry, with no wet spots or frost. If the insulation has failed: replace the evaporator or add extra insulation in the form of foam tape to the evaporator.

C. Check the compressor.

1. The compressor may be inefficient.

   a. Check the amp draw, if low change the compressor.

   b. if the amp draw is normal, pinch off the suction line to check the pull down capability of the compressor. The compressor should pull down to 25 inches of vacuum and hold there for three to five minutes.

.

REMOVAL AND REPLACEMENT: Bin Controls

BIN CONTROLS (Ice Level Sensors)

1. Disconnect electrical power.
2. Remove front panel.
3. Remove control box cover.
4. Locate ice chute, at the base of the chute, in front of and behind it are two plastic bin control mounts.
5. Slide each bin control to the left, and in the control box, disconnect the electrical leads connecting the bin control to the circuit board.
6. Reverse to reassemble, be certain that the bin controls are aligned so that the ice level sensors are visible (centered) through the holes in the ice chute.

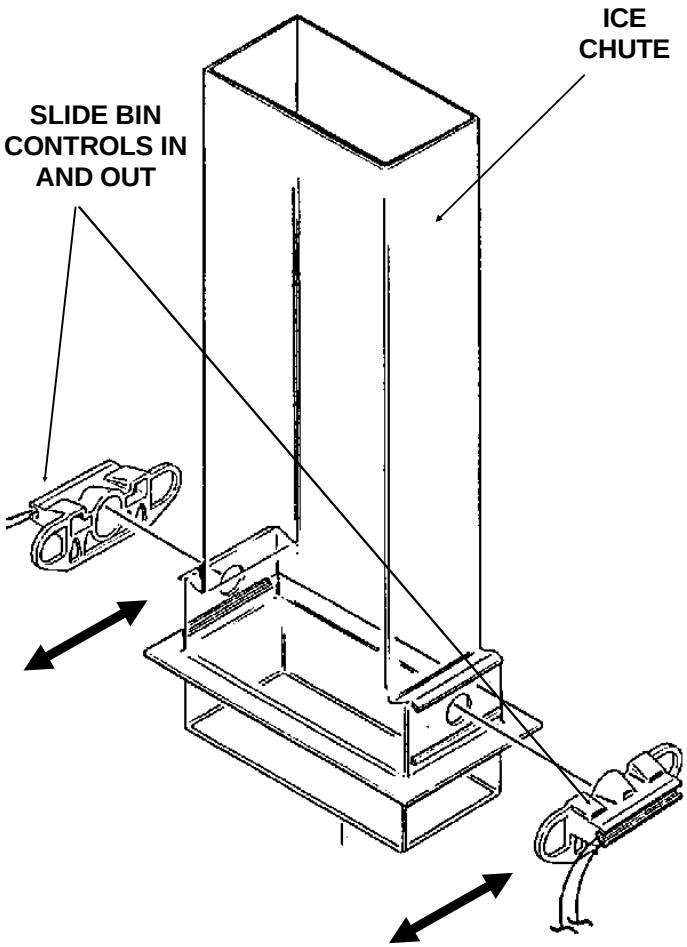

RESERVOIR

1. Shut off water supply.
2. Remove front panel.
3. Remove reservoir cover.
4. Disconnect water inlet tube from reservoir inlet fitting.
5. To remove float valve, push in on "Locking Tab" as shown and pull valve up.

Note: The plunger/seat is available as a separate part.

6. To remove reservoir, pull up and remove water sensor.
7. Disconnect water outlet tubes.
8. Remove the two screws holding reservoir to bracket.
9. Remove reservoir from ice machine.
10. Reverse steps 1-9 to reassemble.

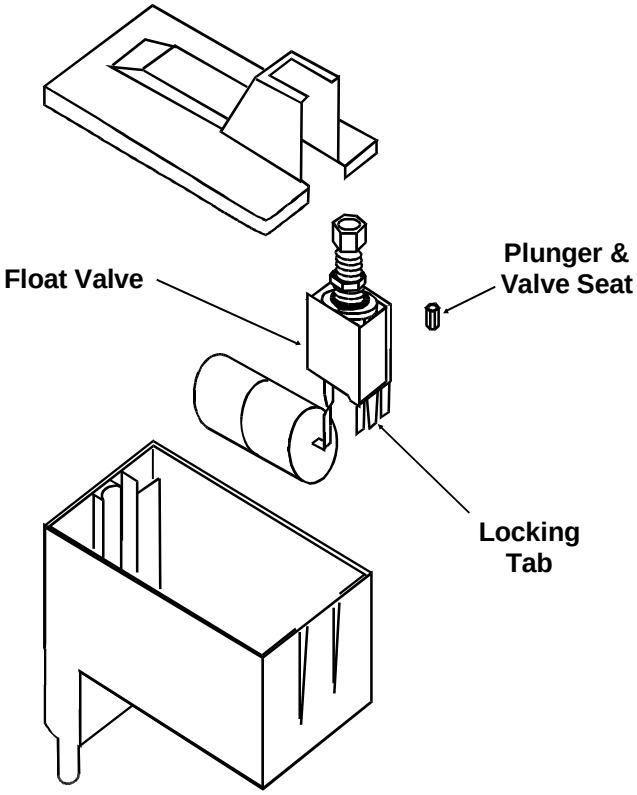

REMOVAL AND REPLACEMENT: Bearing And Breaker

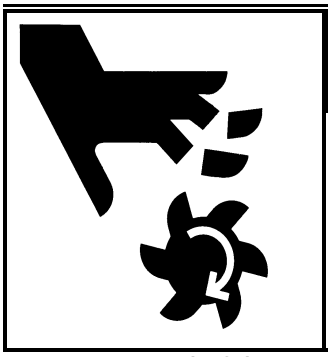

⚠WARNING

Hazardous Moving Parts.
Moving auger can cause personal injury. Disconnect electrical power before beginning.

Note: Removal of the auger, water seal, evaporator and gearmotor must begin at the top of the assembly.

To Remove the Breaker Bearing Assembly:

1. Remove panels and disconnect electrical power.
2. Pull the bail clamp off of the chute cover. Unscrew three studs and remove ice chute cover.
3. Unscrew and remove ice sweep.
4. Remove insulation halves from outside of ice chute lift up and remove ice chute. *See page 19.*
5. The breaker may be removed from the auger and evaporator without disturbing the auger.
   a. Unscrew breaker cover from breaker (left hand threads)
   b. Unscrew auger stud from top of auger.
   c. Unscrew 4 allen head cap screws holding breaker to evaporator.
   d. Lift up, and remove breaker/bearing assembly from auger & evaporator.
6. Service the bearing. Check for rust, rough spots and damage.
   a. The bearing is pressed into the breaker, to remove the bearing and replace it an arbor press is needed.
   b. Replace lower seals before installing new bearing in breaker.

Note: seals must be pressed in with a tool pushing against the outer edge only, they will not install by hand.

Replace parts as required. Re-grease bearing with Scotsman part no. A29123-001 bearing grease. Replace top seal, and check the o-rings, replace if cut or torn.

7. Reverse to reassemble: specific tools and materials are required to install properly.
   a. Add food grade grease such as Scotsman part number 19-0569-01 to the seal area before installing on the auger.
   b. Check the seal to shaft areas for cuts, or rough spots: none are permitted.

FME Components Shown, NME similar.

Step 5-a

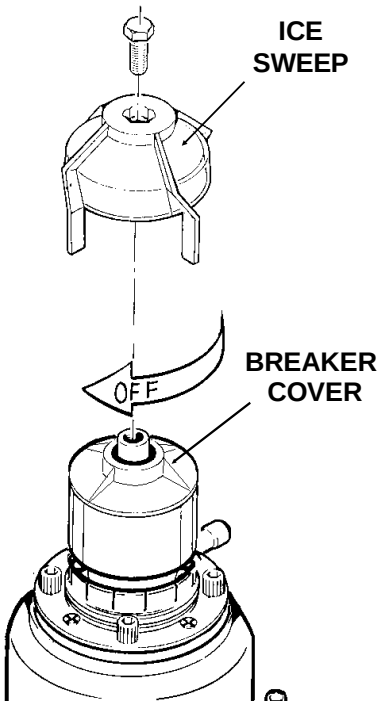

Step 5-b

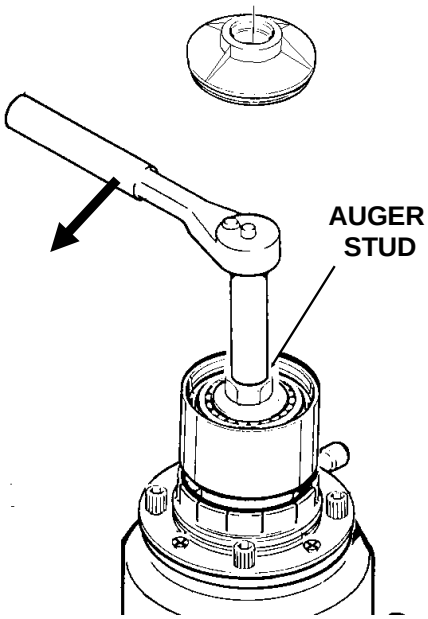

Step 5-c and Step 6

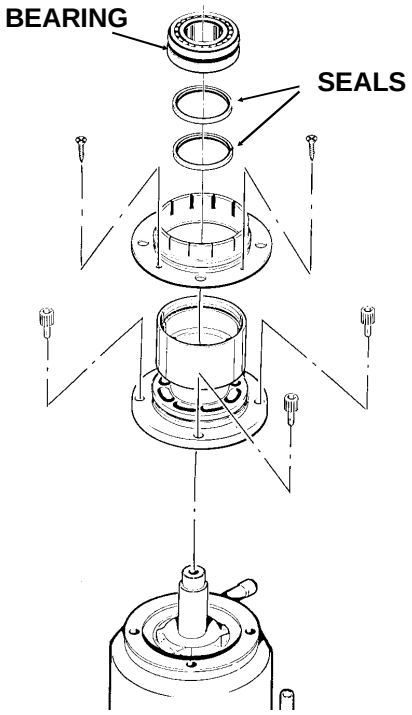

REMOVAL AND REPLACEMENT: Auger

⚠WARNING

Hazardous Moving Parts.
Moving auger can cause personal injury. Disconnect electrical power before beginning.

To Remove the Auger:

Turn off the water to the machine, and unclip the evaporator drain hose, pull it down and drain the evaporator into the bin or a container.

1. The top panel must be removed.
2. Remove bail clip and remove ice chute cover.
3. Unscrew ice sweep.
4. Remove ice chute body.
5. The auger and breaker/bearing may now be removed as an assembly.

a. Unscrew 4 allen head cap screws holding breaker to evaporator.

b. Lift up on breaker and remove auger from evaporator.

Note: If the auger is stuck, the breaker must be removed from the auger.

The breaker may be removed from the auger and evaporator without disturbing the auger.

a. Unscrew breaker cover from breaker (left hand threads)

b. Unscrew auger stud from top of auger.

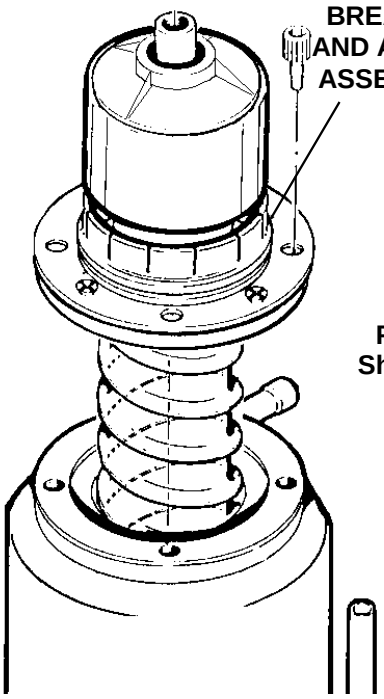

FME Components Shown, NME similar.

c. Unscrew 4 allen head cap screws holding breaker to evaporator.

d. Lift up & remove breaker from evaporator.

e. If the auger is stuck use a slide hammer type puller to pull on the auger at the threaded hole. The size of that hole is 5/8"-18.

Inspect the auger, the critical areas of the auger are:

1. The auger body. It should be clean and shining. Sometimes an auger will appear clean when wet, but after it is dry it will be seen to be stained. Scrub the auger with ice machine cleaner and hot water.

////////////////////////////////WARNING////////////////////////////////

Ice machine cleaner is an acid. Handle it with extreme care, keep out of the reach of children.

//

2. The water seal area. Because the auger has been removed, the water seal will have to be replaced. Remove the water seal top half from the auger, and inspect the auger for minerals clean as required.

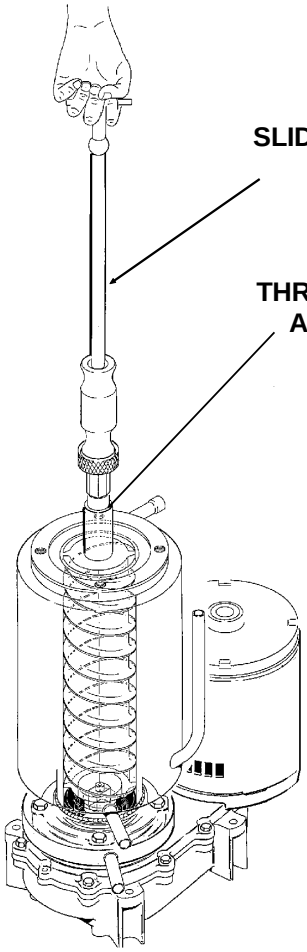

REMOVAL AND REPLACEMENT: Water Seal

To Remove the Water Seal:

(Assuming all steps to remove the auger have been performed.)

1. The gearmotor/evaporator assembly will have to be exposed.
2. Remove the 4 hex head cap screws holding the evaporator to the gearmotor assembly. Lift the evaporator up and off of the gearmotor.
3. Remove the snap ring or wire retainer from the grove under the water seal.
4. Pull or drive out the lower half of the water seal.

REMOVAL OF THE WATER SEAL

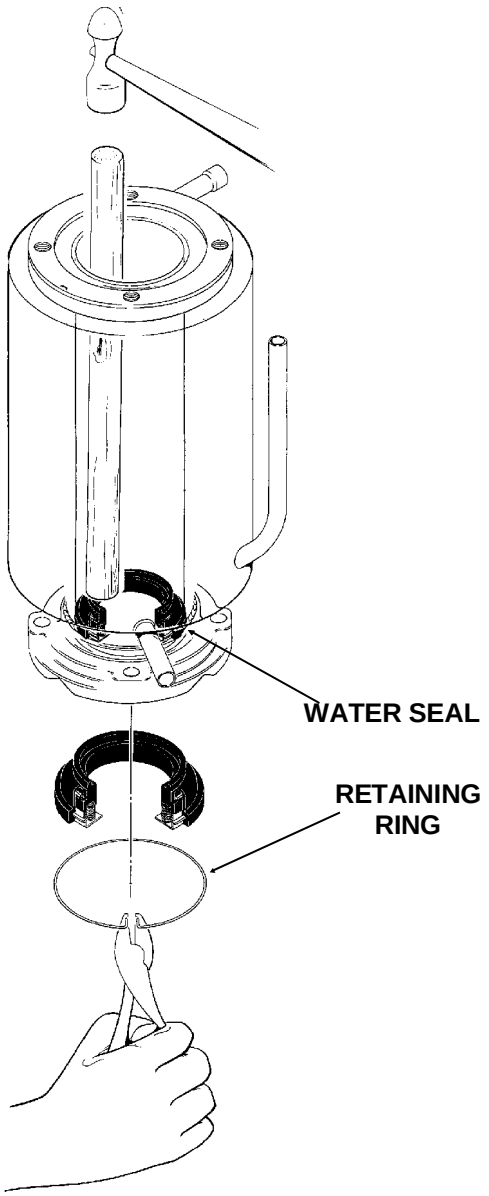

To Replace the Water Seal:

1. Lubricate the water seal with water, and push the water seal into the bottom of the evaporator slightly past the grove for the snap ring.
2. Replace the snap ring and pull the water seal down against it.
3. The part of the water seal that rotates with the auger must also be replaced. Remove the old part from the auger and clean the mounting area.
4. Place a small bead of food grade silastic sealant (such as 732 RTV or Scotsman part number 19-0529-01) on the area of the auger where the water seal is to be mounted.

REPLACING THE WATER SEAL

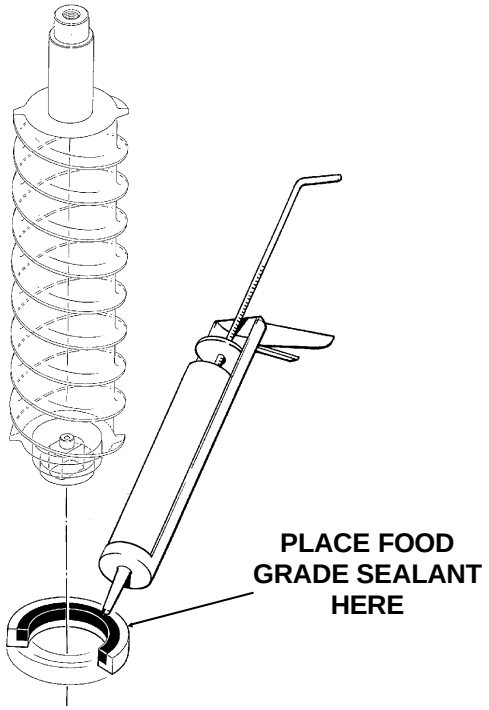

5. Carefully push the water seal (rubber side against the auger shoulder and the silastic.)

////////////////////////////////CAUTION////////////////////////////////

Do not get any silastic onto the face of the seal.

//

6. Allow the auger and seal to air dry until the silastic is dry on the surface.
7. If the original water seal was leaking, it would be a good idea to inspect the interior of the gearmotor.

REMOVAL AND REPLACEMENT: Evaporator

To Replace the Evaporator:

(Assuming all the steps for removal of the thrust bearing, breaker, auger, and water seal have been performed.)

1. Recover the refrigerant from the ice maker.
2. Unsweat the refrigerant connections:

 a) At the thermostatic expansion valve outlet.

////////////////////////////////CAUTION////////////////////////////////

Heat sink the TXV body when unsweating or resweating the adjacent tubing.

//

 b) At the suction line at the joint about 3" from the evaporator.

3. Remove the evaporator.
4. Unsweat the drier from the liquid line.
5. After installing a new water seal in the new evaporator (see “To Replace the Water Seal”) sweat in the new evaporator at the old tubing connections.
6. Install an new drier in the liquid line.
7. Evacuate the system until dehydrated, then weigh in the nameplate charge. Check for leaks.
8. Install auger, breaker, breaker bearing assembly, and ice discharge chute in reverse order of disassembly. See “To Reassemble Evaporator and Auger”

To Reassemble the Evaporator and Auger

1. After the gearmotor has been inspected, fasten the evaporator to the gear motor, be sure that the number of shims indicated on the gear case cover is in place between the gearcase cover and the drip pan gasket. Torque the bolts to 110 inch pounds.
2. Lower the auger into the evaporator barrel, slightly turning it to match up with the drive end. Do Not Drop Into the Evaporator.
3. Complete the reassembly by reversing the disassembly for the breaker & thrust bearing assembly.

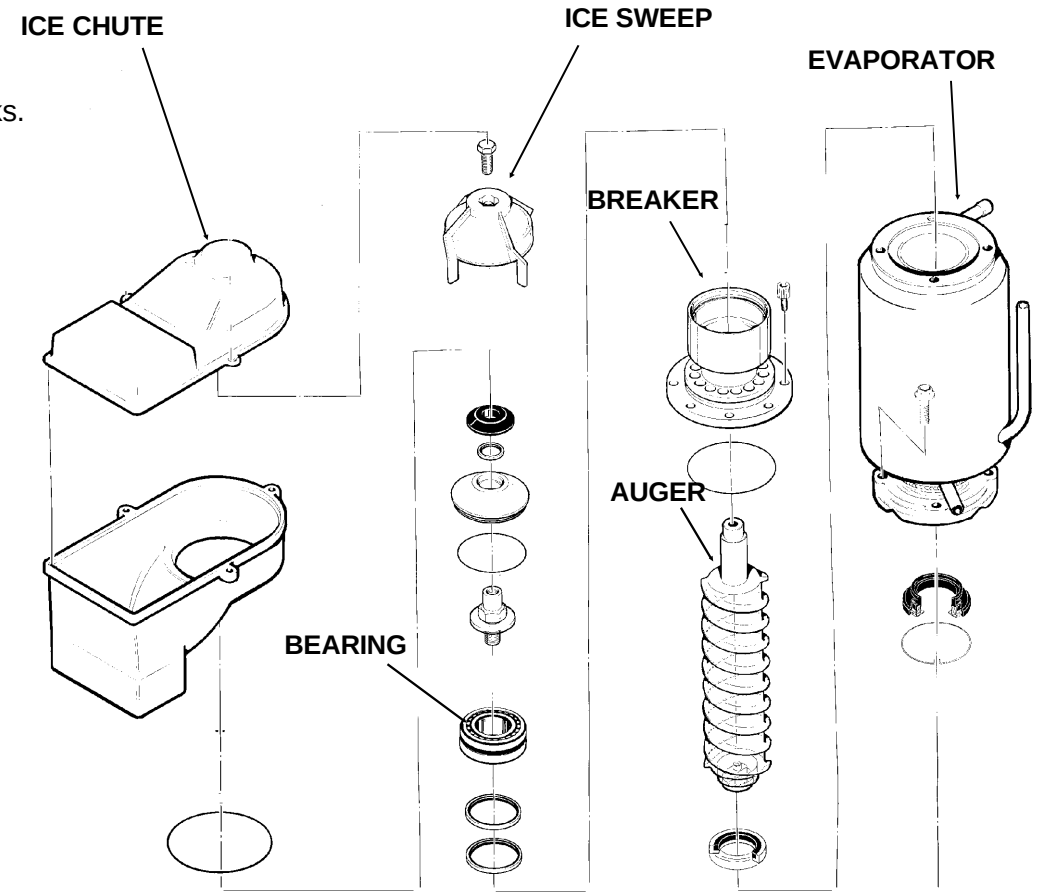

NME Components Shown, FME similar.

REMOVAL AND REPLACEMENT: Gearmotor

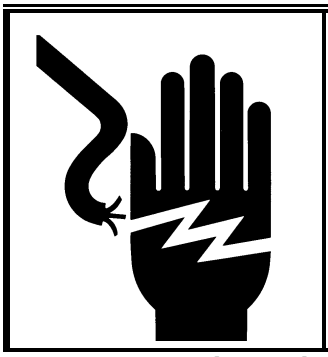

⚠WARNING

Electrical Shock Hazard. Electrical shock can cause personal injury. Disconnect electrical power before beginning.

Note: The gears and bearings are available only as pressed together sets.

To Remove and Repair the Gearmotc Assembly:

(Assuming that the procedures through removal of the water seal have been performed.)

1. Remove the electrical wires from the drive motor.
2. Unscrew the 4 cap screws holding th gearmotor to the base of the machine.
3. Remove the gearmotor from the icemaker.

Bench test the gearmotor, check for oil leaks, noise, and amp draw.

To Inspect the gearmotor.

A) Remove the cap screws holding the gearmotor case halves together and pry the two cases apart.

B) To lift off the cover, lift up until you can feel internal contact, then pull the cover towards the output gear end, and then lift the cover (with drive motor attached) up and away from the gear motor case.

Note: The gearcase cover, output gear, bearings and output shaft are a pressed together assembly. Replace as a unit.

C) Inspect the oil, gears, and bearings. If the oil level and condition is acceptable, quickly check the gears and bearings. They are likely to be fine if the oil is.

If there is evidence of water in the oil (rusty bearings and gears; the oil having a creamy white appearance; oil level too high) carefully inspect the bearings and gears. If in doubt about the condition of a part, replace it. The oil quantity is 14 fluid ounces, do not overfill.

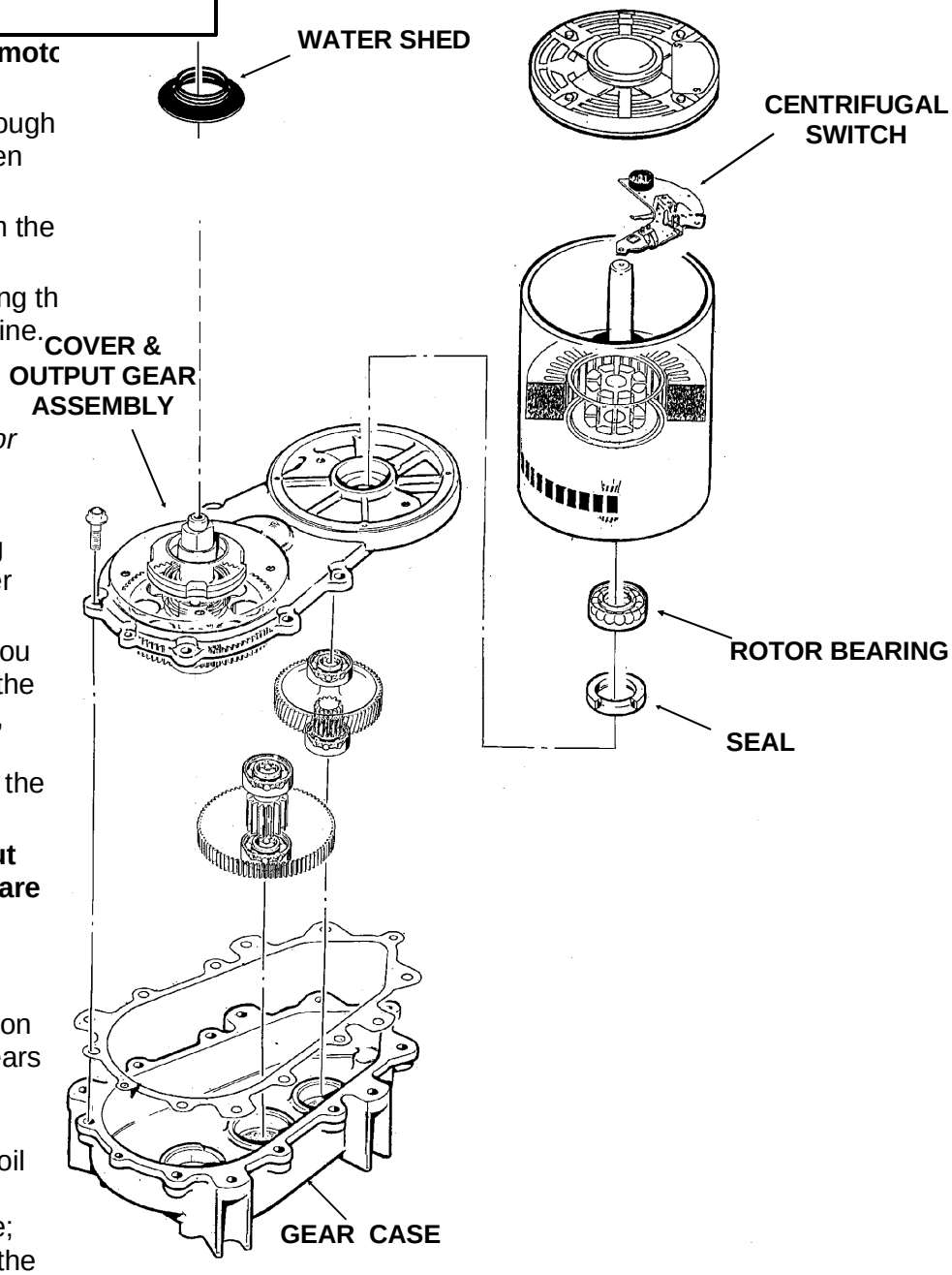

Bench test the gearmotor, check for oil leaks, noise, and amp draw.

REFRIGERATION SERVICE: R-404A

THIS ICE MACHINE USES R-404A (HP62) REFRIGERANT AND POLYOLESTER COMPRESSOR OIL.

DO NOT USE MINERAL OIL IN THIS REFRIGERATION SYSTEM.

- R-404A is a "Near Azeotrope", and therefore liquid charging is required.
- When the system is serviced, a special liquid line dryer is required.
- Polyolester oil absorbs water very easily, and therefore when the system is opened for service, it must be re-sealed as soon as possible (15 minutes maximum).
- Special leak detection equipment is required to locate small refrigerant leaks. Usually a leak detector capable of detecting a Halogenated refrigerant or HFC-134A will work. Check with the leak detector manufacturer if in doubt.
- As with any other refrigerant, do NOT mix HP62 with pressurized air when leak testing.
- Evacuate to 300 microns

Recover, reclaim or recycle refrigerant. The method chosen is up to the service company. Any refrigerant placed into a Scotsman ice machine must meet ARI spec 700-88. Reclaim programs are available through most refrigerant wholesalers.

Access Valves: To use the access valves:

Remove the cap from the stem, use a 3/16" allen wrench to check that the valve is CLOSED. The remove the core cap.

Close the valve and replace the caps when the job is finished. The valve must be closed and the caps must be on or the valve will leak.

Pressure-Temperature Chart for HP62

TEMP. (DEG F)	VAPOR PRESSURE (PSIG)	TEMP. (DEG F)	VAPOR PRESSURE (PSIG)
-20	17	70	146
-18	18	72	150
-16	20	74	155
-14	21	76	161
-12	23	78	166
-10	24	80	171
-8	26	82	177
-6	28	84	182
-4	29	86	188
-2	31	88	194
0	33	90	200
2	35	92	206
4	37	94	212
6	39	96	219
8	41	98	225
10	43	100	232
12	46	102	239
14	48	104	246
16	50	106	253
18	53	108	260
20	55	110	268
22	58	112	275
24	60	114	283
26	63	116	291
28	66	118	299
30	69	120	307
32	72	122	316
34	75	124	324
36	78	126	333
38	81	128	342
40	85	130	351
42	88	132	360
44	91	134	370
46	95	136	379
48	99	138	389
50	102	140	399
52	106	142	409
54	110	144	420
56	114	146	430
58	118	148	441
60	123	150	452
62	127	152	464
64	132	154	475
66	136	156	487
68	141	158	499

REFRIGERATION SERVICE

General Information:

Work on the refrigeration system should only be done when it is certain that the system needs repair.

- **Refrain from checking refrigeration pressures without reason.** Visual inspection of the water system, observation of the ice formation, amp draw, voltage, and other techniques will lead to proper diagnosis. Scotsman also recommends that, at the time of initial start up, gauges not be used.
- If gauges must be used, don't always check the high side pressure. If the condenser is clean and seems to be operating correctly, it most likely is. The low side pressure is more important on an ice machine than the high side.
- If gauges must be used, use very short hoses to minimize refrigerant discharged into the air.
- Refrigerant should not be added except as a way to determine the proper operation of the product. If the system was low on refrigerant, there is a leak, and it must be found and repaired.
- This system has a critical charge, it must be recharged with the correct amount of refrigerant as listed on the nameplate of the ice machine, or performance will suffer.
- Anytime the refrigeration system has been opened, the dryer should be replaced. **Note: Only a HFC type dryer should be used.**
- When brazing the tubing connections to components such as the TXV, the component must be protected by heat sink material.

Recover, reclaim or recycle refrigerant. The method chosen is up to the service company. Any refrigerant placed into a Scotsman ice machine must meet ARI spec 700-88. Reclaim programs are available through most refrigerant wholesalers.

Access Valves: To use the access valves:

Remove the cap from the stem, use a 3/16" allen wrench to check that the valve is CLOSED. The remove the core cap.

Close the valve and replace the caps when the job is finished. The valve must be closed and the caps must be on or the valve will leak.

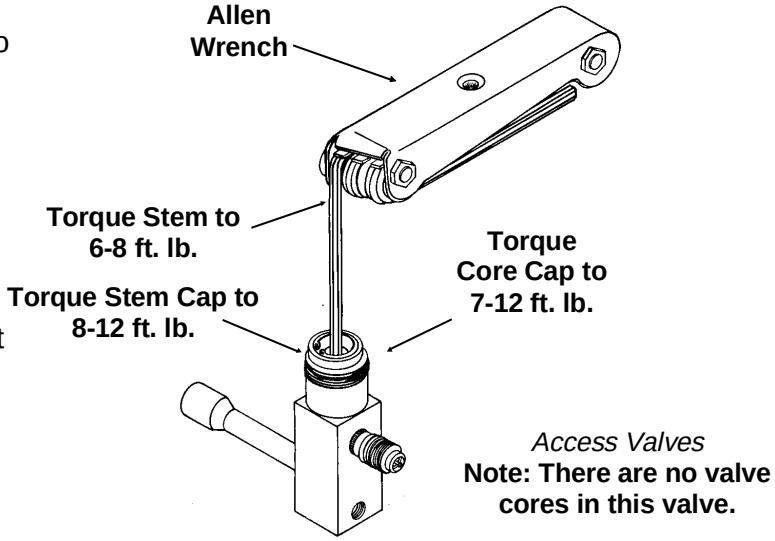

Access Valves
Note: There are no valve cores in this valve.

CIRCUIT BOARD TESTING

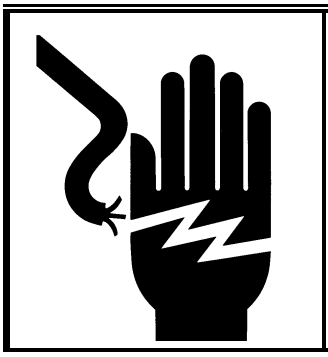

⚠WARNING

Electrical Shock Hazard. Electrical shock can cause personal injury. Disconnect electrical power before connecting tester.

INSTRUCTIONS FOR USING TESTER, (Optional, order part no. A33942-001)

*(These instructions assume that the unit **will not run,** and prior investigation of electric power, controls, and mechanical parts indicates that the electronic circuit may be at fault.)*

Note: All testing is done with the electrical power on, the master switch on, and all reset switches "reset".

1. Unplug "photo trans" and "LED" connectors from the circuit board.

2. Plug "photo trans" and "LED" connectors from the tester into the circuit board.

3. Unplug "water sen" connector from control board.

4. Plug "water sen" connector from Scotsman tester into circuit board.

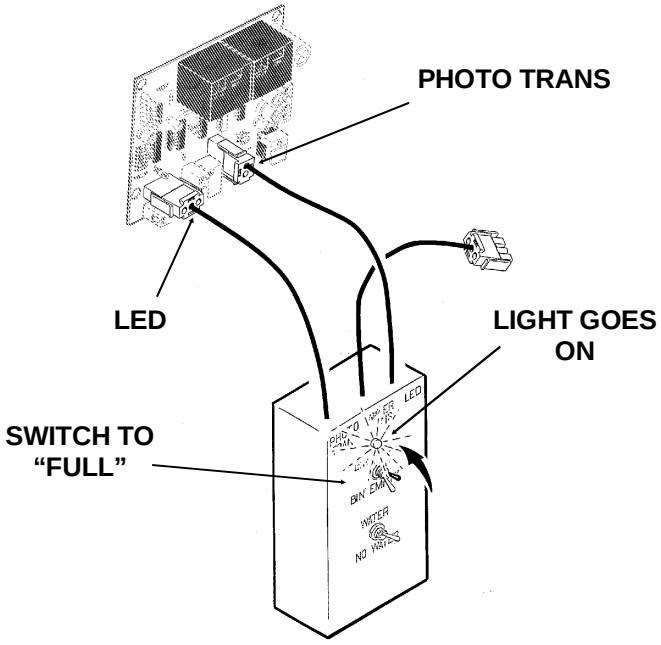

Bin Control

a. Move the "bin full" switch on the tester to Full. The light on the tester should be ON.

If the light on the tester is not on, the circuit board should be replaced.

b. If the light on the tester IS on, move the "bin full" switch to Bin Empty. The light on the tester should go OFF, and the Bin Empty light on the circuit board should go ON.

If the Bin Empty light is ON, wait 10-20 seconds for the machine to start, if the machine starts, replace the ice level sensors.

If the Bin Empty light does not come ON, the circuit board should be replaced.

Water Level

a. Move "water" switch on tester to No Water position. The No Water light on the circuit board should go ON. If not, replace the circuit board.

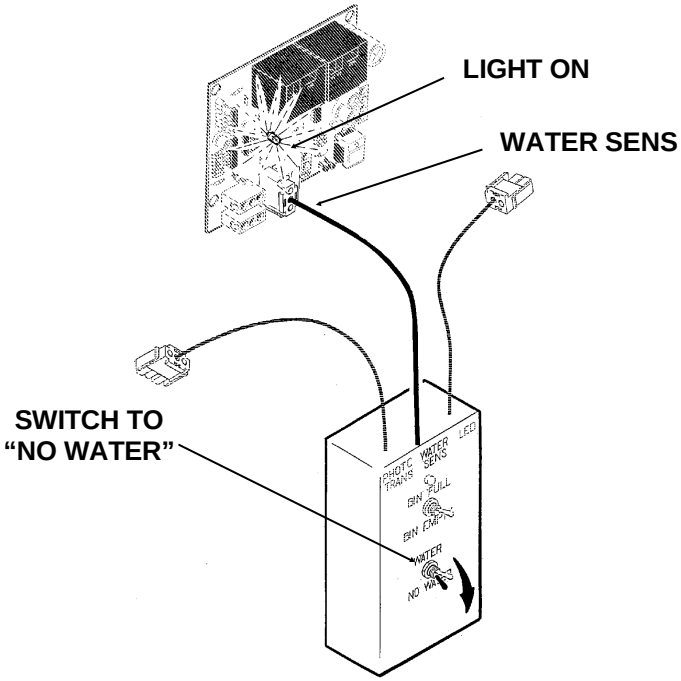

b. Move the "water" switch on the tester to the Water position. The No Water light on the board should go OFF. If not replace the circuit board. If the light does go off, replace the water level sensor.

If the Bin Empty light is ON, wait 10-20 seconds for the machine to start. The machine should start.