# NME1850 & FME2400 SERVICE PARTS

This parts list contains the service parts and wiring diagrams for this model. Check the model number in question to be sure that it is applicable to this parts list.

**TABLE OF CONTENTS**


Cabinet ..... 2

Air Cooled Refrigeration ..... 3

Water Cooled Refrigeration ..... 4

Water System ..... 5

Gearmotor ..... 6

NME Evaporator ..... 7

FME Evaporator ..... 8

Control Box ..... 9

Wiring Diagrams ..... 10

# NME1850 & FME2400 SERVICE PARTS
## Cabinet Assembly

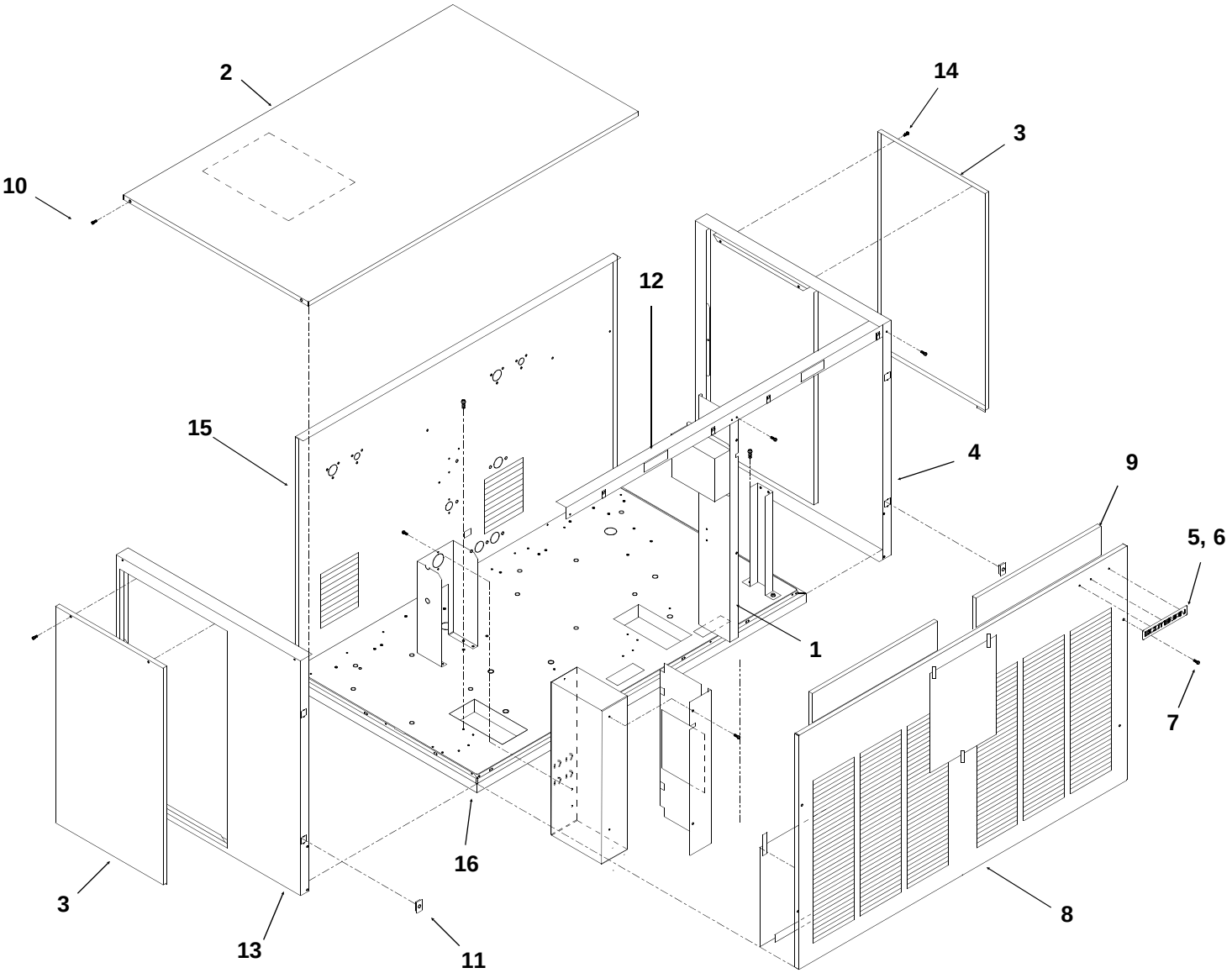


| ITEM NUMBER | PART NUMBER | DESCRIPTION |
|---|---|---|
| 1 | A34286-001 | Center Support |
| 2 | A32461-001 | Top Panel, sandalwood |
| | A32461-015 | Top panel, gray |
| | A32461-002 | Top Panel, S.S. |
| 3 | A34038-001 | Service Panel, sandalwood |
| | A34038-015 | Service panel, gray |
| | A34038-002 | Service Panel, S.S. |
| 4 | A33292-001 | Right Side Panel, sndlwd |
| | A33292-015 | Right side panel, gray |
| | A33292-002 | Right Side Panel, S.S. |
| 5 | 03-0271-00 | Speed Clip |
| 6 | 15-0711-01 | Emblem, sandalwood |
| | 15-0808-03 | Emblem, gray |
| 7 | 03-1419-22 | Screw |

| ITEM NUMBER | PART NUMBER | DESCRIPTION |
|---|---|---|
| 8 | A34294-001 | Front Panel, sandalwood |
| | A34294-015 | Front panel, gray |
| | A34294-002 | Front Panel, S.S. |
| 9 | 02-2976-01 | Air filter |
| | 03-1660-01 | Clip for filter |
| 10 | 03-1531-01 | Screw |
| 11 | 02-0836-00 | Catch |
| 12 | A34287-001 | Support |
| 13 | A32435-001 | Left Side Panel, Sndlwd |
| | A32435-015 | Left side panel, gray |
| | A32435-002 | Left Side Panel, S.S. |
| 14 | 03-1404-12 | Screw |
| 15 | A36517-001 | Rear Panel, sandalwood |
| | A36517-015 | Rear panel, gray |
| | Item 15 for Water Cooled Painted Only | |
| 16. | A36554-001 | Base |

# NME1850 & FME2400 SERVICE PARTS
## Air Cooled Refrigeration

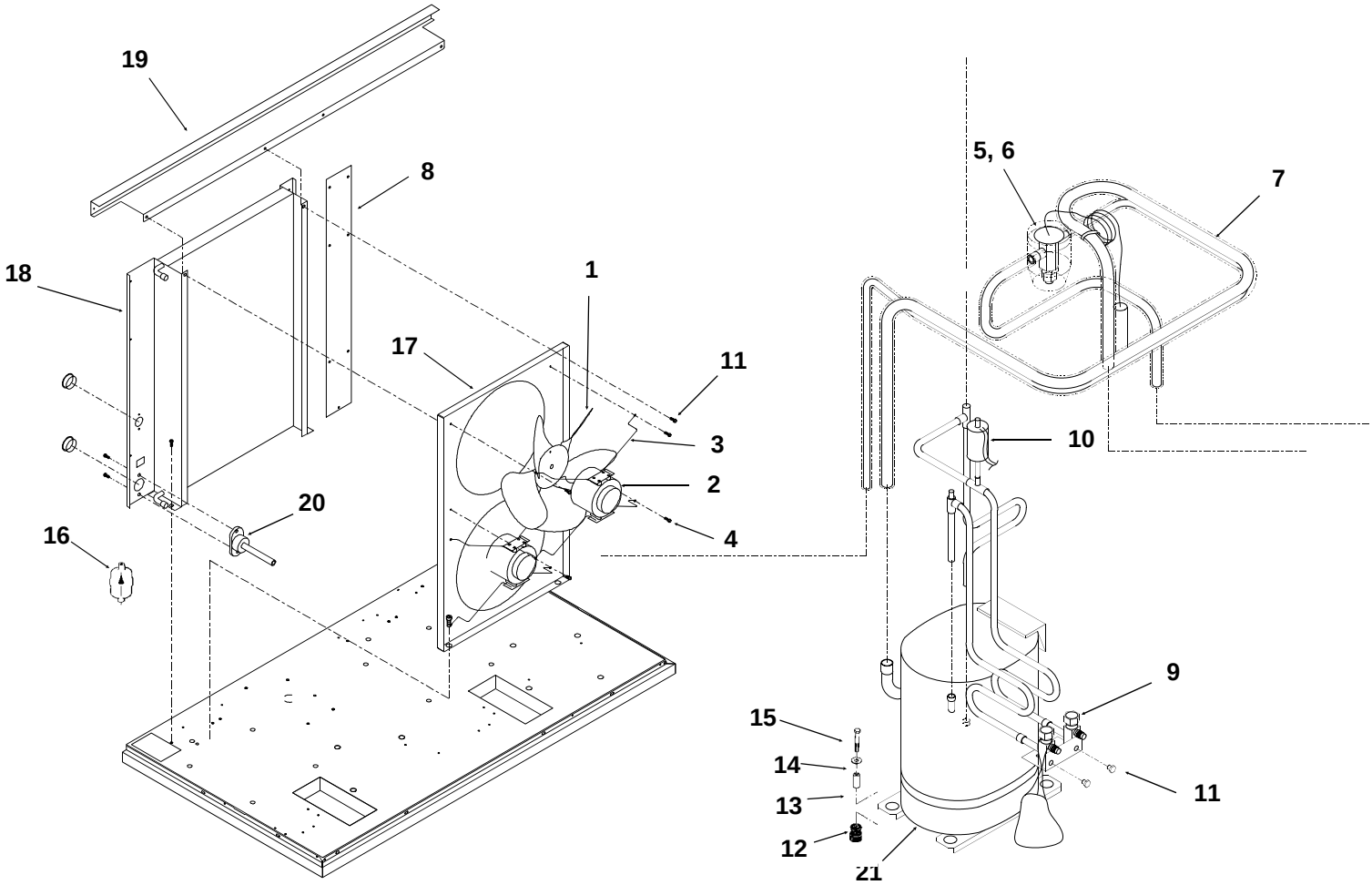


| ITEM NUMBER | PART NUMBER | DESCRIPTION |
|---|---|---|
| 1 | 18-3815-01 | Fan Blade |
| 2 | 12-1576-02 | Fan Motor |
| 3 | 02-2378-01 | Fan Bracket |
| 4 | 03-1531-01 | Screw |
| 5 | A32961-020 | Insulation Kit (3 piece) |
| 6 | 11-0488-21 | Thermo Expansion Valve |
| 7 | A36496-001 | Suction Line |
| 8 | A34285-001 | Filler panel |
| 9 | 16-0832-20 | Access valve |
| 9a | 16-0832-02 | Stem cap |
| 9b | 16-0832-03 | Core cap |
| 10 | 11-0485-21 | Hi Pressure Cut Out |
| 11 | 03-1645-01 | Screw |
| 12 | 18-2200-28 | Grommet |
| 13 | 18-2200-27 | Sleeve |

| ITEM NUMBER | PART NUMBER | DESCRIPTION |
|---|---|---|
| 14 | 03-1407-07 | Washer |
| 15 | 03-1405-20 | Cap Screw |
| 16 | 02-3319-02 | Dryer |
| 17 | A33231-001 | Fan Shroud |
| 18 | 18-8717-01 | Condenser |
| 19 | A35613-001 | Condenser Support |
| 20 | A32282-004 | Drain fitting |
| 21 | 18-8768-22 | Compressor 208-230/60/1 |
| | Overload is internal | |
| | 18-8768-24 | Compressor 200-230/60/3 |
| | Overload is internal | |
| | 18-8772-26 | Compressor 230/50/1 |
| | 18-8772-21 | Overload |

Note: Replacement compressors include a new HFC dryer, and single phase 60 Hz replacments include the starting components.

# NME1850 & FME2400 SERVICE PARTS
## Water Cooled Refrigeration

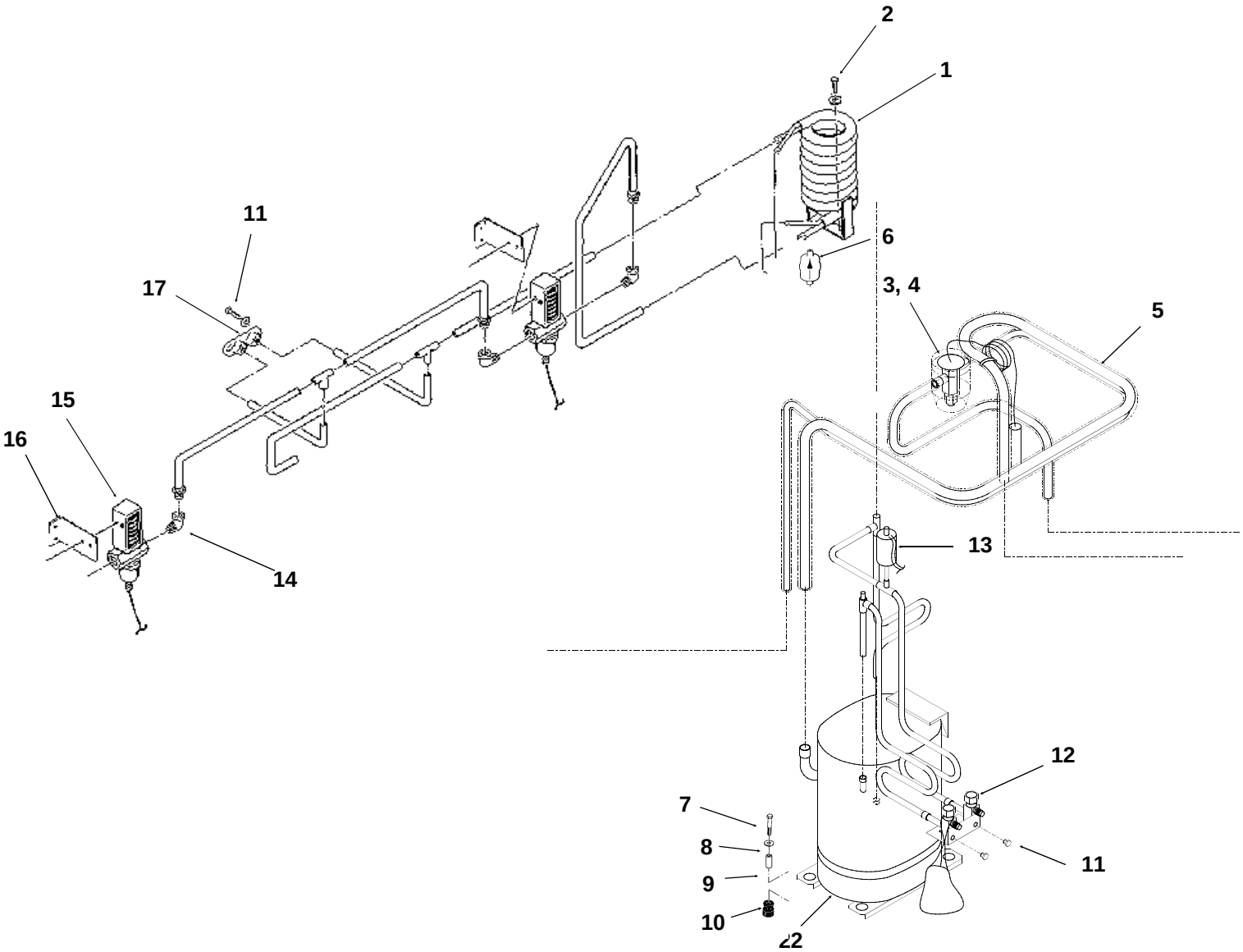


| ITEM NUMBER | PART NUMBER | DESCRIPTION |
|---|---|---|
| 1 | 18-8718-25 | Condenser |
| 2 | 03-1645-01 | Screw |
| 3 | 11-0488-21 | Thermo Expansion Valve |
| 4 | A32961-020 | Insulation Kit (3 piece) |
| 5 | A36496-001 | Suction Line |
| 6 | 02-3319-02 | Dryer |
| 7 | 03-1405-20 | Cap Screw |
| 8 | 03-1407-07 | Washer |
| 9 | 18-2300-27 | Sleeve |
| 10 | 18-2200-28 | Grommmet |
| 11 | 03-1645-01 | Screw |
| 12 | 16-0832-20 | Access valve |
| 12a | 16-0832-02 | Stem cap |
| 12b | 16-0832-03 | Core cap |
| 13 | 11-0485-21 | Hi Pressure Cut Out |
| 14 | 16-0401-02 | Elbow |
| 15 | 11-0478-01 | Water Reg. Valve |
| 16 | A34341-001 | Bracket |
| 17 | A31878-004 | Drain Assembly |
| 18 | 18-8768-22 | Compressor 208-230/60/1 |
| | Overload is internal | |
| | 18-8768-24 | Compressor 200-230/60/3 |
| | Overload is internal | |
| | 18-8772-26 | Compressor 230/50/1 |
| | 18-8772-21 | Overload |

Note: Replacement compressors include a new HFC dryer, and single phase 60 Hz replacments include the starting components.

# NME1850 & FME2400 SERVICE PARTS
## Water System

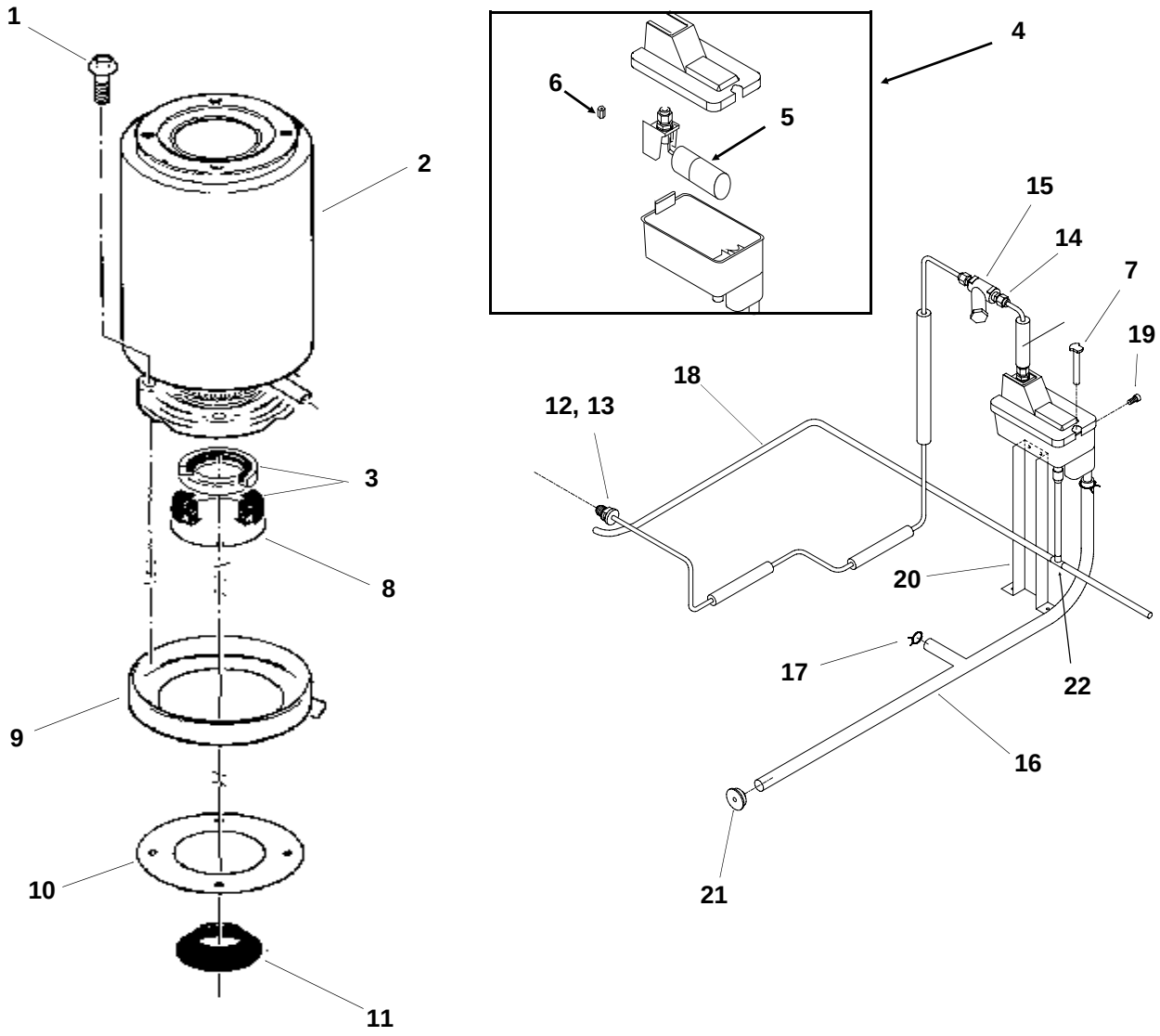


| ITEM NUMBER | PART NUMBER | DESCRIPTION |
|---|---|---|
| 1 | 03-1420-03 | Cap Screw |
| 2 | A32890-020 | Evaporator |
| 3 | 02-0929-23 | Water Seal |
| 4 | 02-3266-20 | Reservoir & valve |
| 5 | 02-3266-21 | Float valve |
| 6 | 02-3266-03 | Plunger/seat |
| 7 | A33101-022 | Water Level Sensor |
| 8 | A32777-001 | Retaining Ring for Seal |
| 9 | 02-3837-01 | Drip Pan |
| 10 | 13-0704-00 | Gasket |
| 11 | 13-0868-01 | Water Shed |
| 12 | A27318-001 | Water Inlet Fitting - for copper |
| | 16-0835-01 | Inlet fitting for plastic tubing |
| | 16-1039-01 | Male connector |
| 13 | 03-1394-01 | Pal Nut |
| 14 | 16-0791-01 | Coupling union |

| ITEM NUMBER | PART NUMBER | DESCRIPTION |
|---|---|---|
| 15 | 16-0162-00 | Strainer - not used after 11/97 |
| 16 | A36154-001 | Evap. water inlet tube |
| 17 | 02-1338-00 | Hose clamp |
| 18 | 13-0079-03 | Res. overflow hose |
| 19 | 03-1639-03 | Screw |
| 20 | A36078-002 | Reservoir bracket |
| 21 | 13-0840-01 | Rubber cap |
| 22 | 16-0670-02 | Tee |

# NME1850 & FME2400 SERVICE PARTS
## Gearmotor

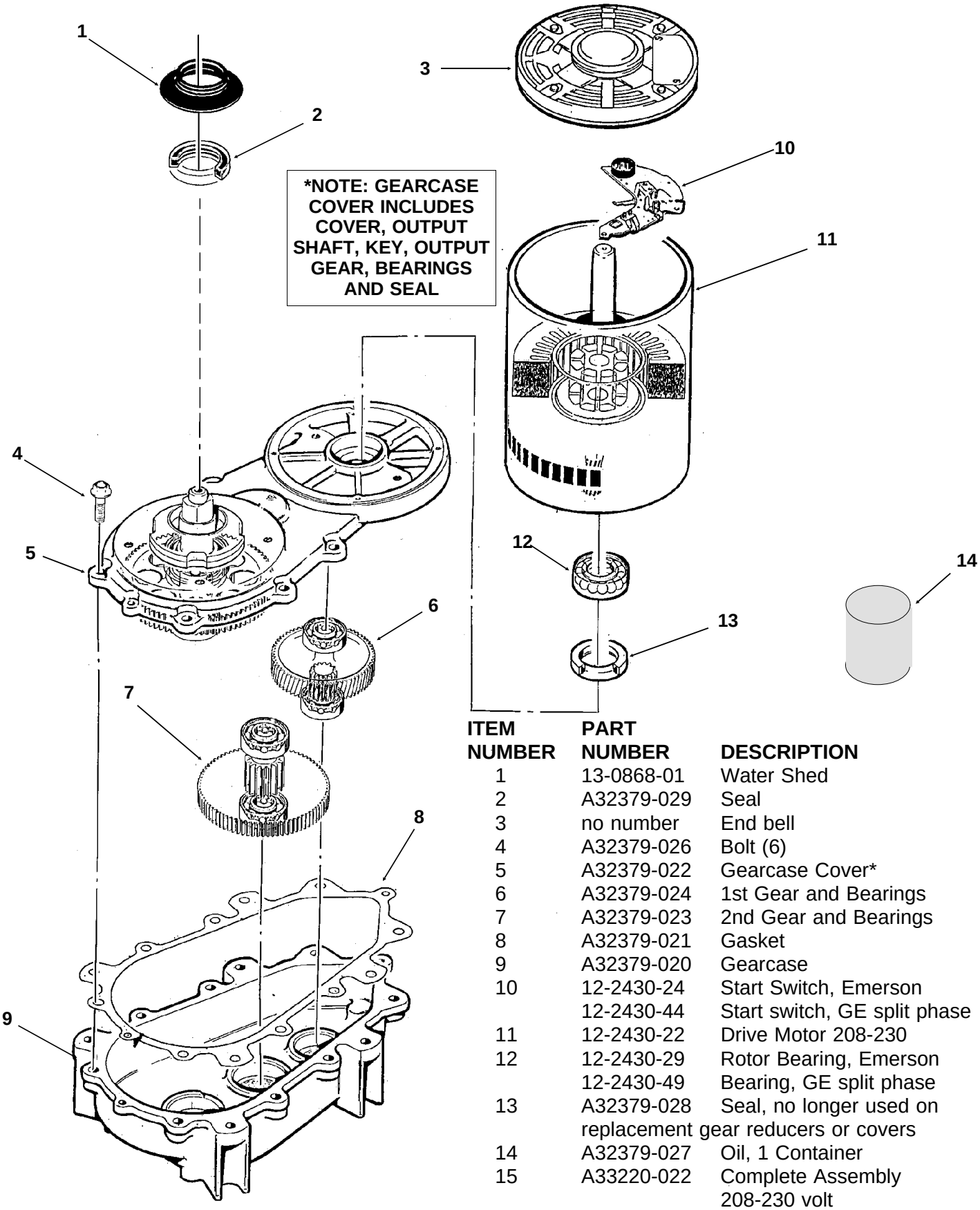


| ITEM NUMBER | PART NUMBER | DESCRIPTION |
|---|---|---|
| 1 | 13-0868-01 | Water Shed |
| 2 | A32379-029 | Seal |
| 3 | no number | End bell |
| 4 | A32379-026 | Bolt (6) |
| 5 | A32379-022 | Gearcase Cover* |
| 6 | A32379-024 | 1st Gear and Bearings |
| 7 | A32379-023 | 2nd Gear and Bearings |
| 8 | A32379-021 | Gasket |
| 9 | A32379-020 | Gearcase |
| 10 | 12-2430-24 | Start Switch, Emerson |
| | 12-2430-44 | Start switch, GE split phase |
| 11 | 12-2430-22 | Drive Motor 208-230 |
| 12 | 12-2430-29 | Rotor Bearing, Emerson |
| | 12-2430-49 | Bearing, GE split phase |
| 13 | A32379-028 | Seal, no longer used on replacement gear reducers or covers |
| 14 | A32379-027 | Oil, 1 Container |
| 15 | A33220-022 | Complete Assembly 208-230 volt |
| 16 | A33220-030 | Gearcase kit, no motor |

# NME1850 & FME2400 SERVICE PARTS
## NME Evaporator

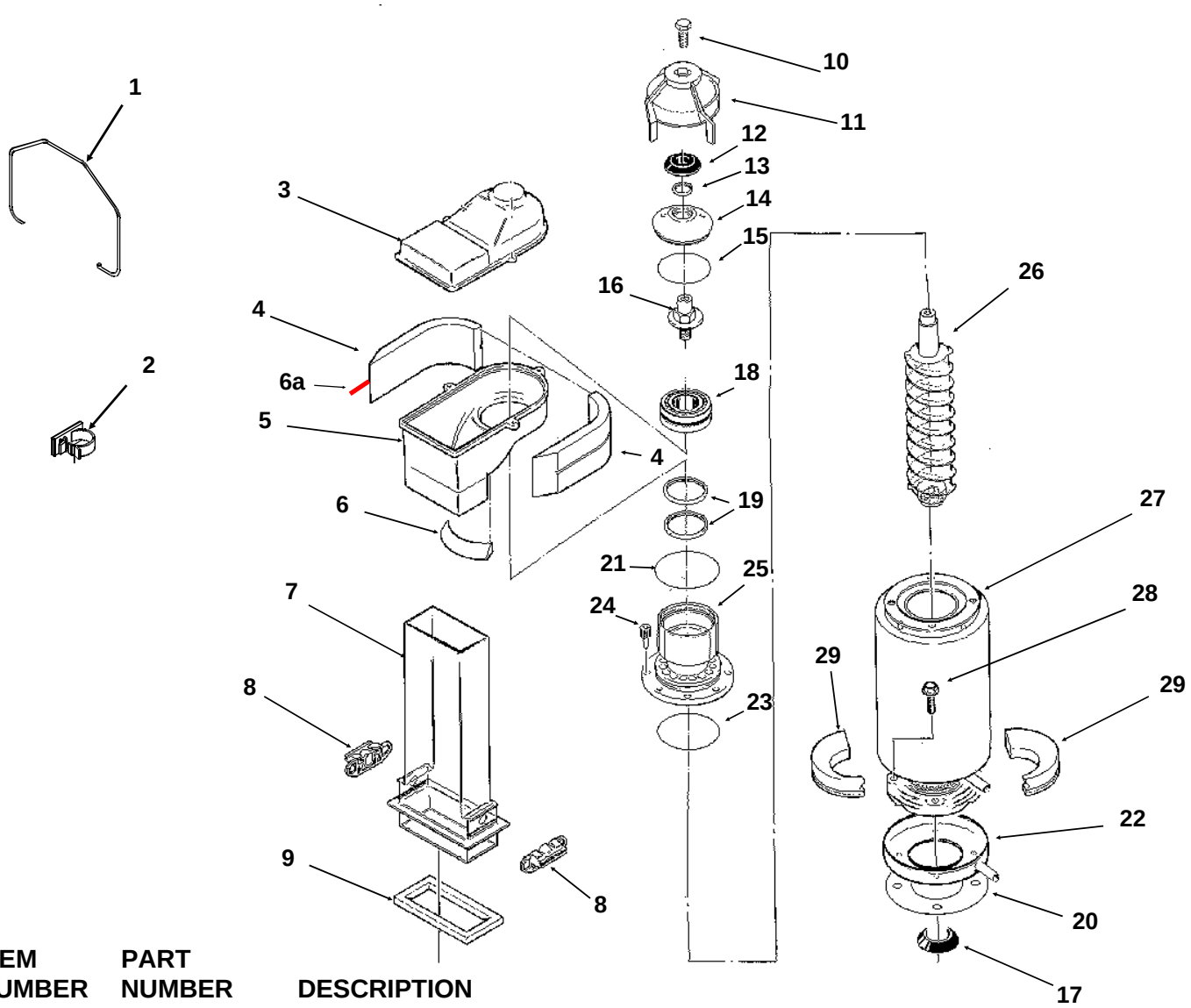


| ITEM NUMBER | PART NUMBER | DESCRIPTION |
|---|---|---|
| 1. | A34969-001 | Bail clip |
| 2. | 02-3268-01 | Drain tube holder |
| 3. | 02-2930-04 | Ice Chute Cover |
| 4. | A32963-001 | Insulation Top (half) |
| 5. | 02-2926-01 | Ice Chute Body |
| 6. | A33102-001 | Insulation Collar Inside |
| 6a | A35419-020 | Strap kit |
| 7. | 02-2929-04 | Ice Chute Lower |
| 8. | A37708-021 | Bin Controls Assy. (set of 2) |
| 9. | A32930-001 | Chute Gasket |
| 10. | 03-1405-52 | Hex Cap Screw |
| 11. | 02-3001-01 | Ice Sweep |
| 12. | 13-0871-01 | Water Shed |
| 13. | 02-2978-01 | Lip Seal |
| 14. | 02-3128-20 | Breaker Cover |
| 15. | 13-0617-52 | O-Ring |
| 16. | 08-0660-01 | Auger Stud & washer |
| 17. | 13-0868-01 | Water Shed |
| 18. | A34559-020 | Bearing |
| 19. | 02-2977-01 | Lip Seal |
| 20. | 13-0704-00 | Drip Pan Gasket |
| 21. | 13-0617-54 | O-Ring |
| 22. | 02-3837-01 | Drip Pan |
| 23. | 13-0617-45 | O-Ring |
| 24. | 03-1544-08 | Soc. Head Screw |
| 25. | A32900-020 | Breaker (includes 18 & 19) |
| 26. | A38071-022 | Auger |
| 27. | A32890-020 | Evaporator |
| 28. | 03-1420-03 | Cap Screw |
| 29. | A32962-001 | Insulation Bot. (half) |

# NME1850 & FME2400 SERVICE PARTS
## FME Evaporator

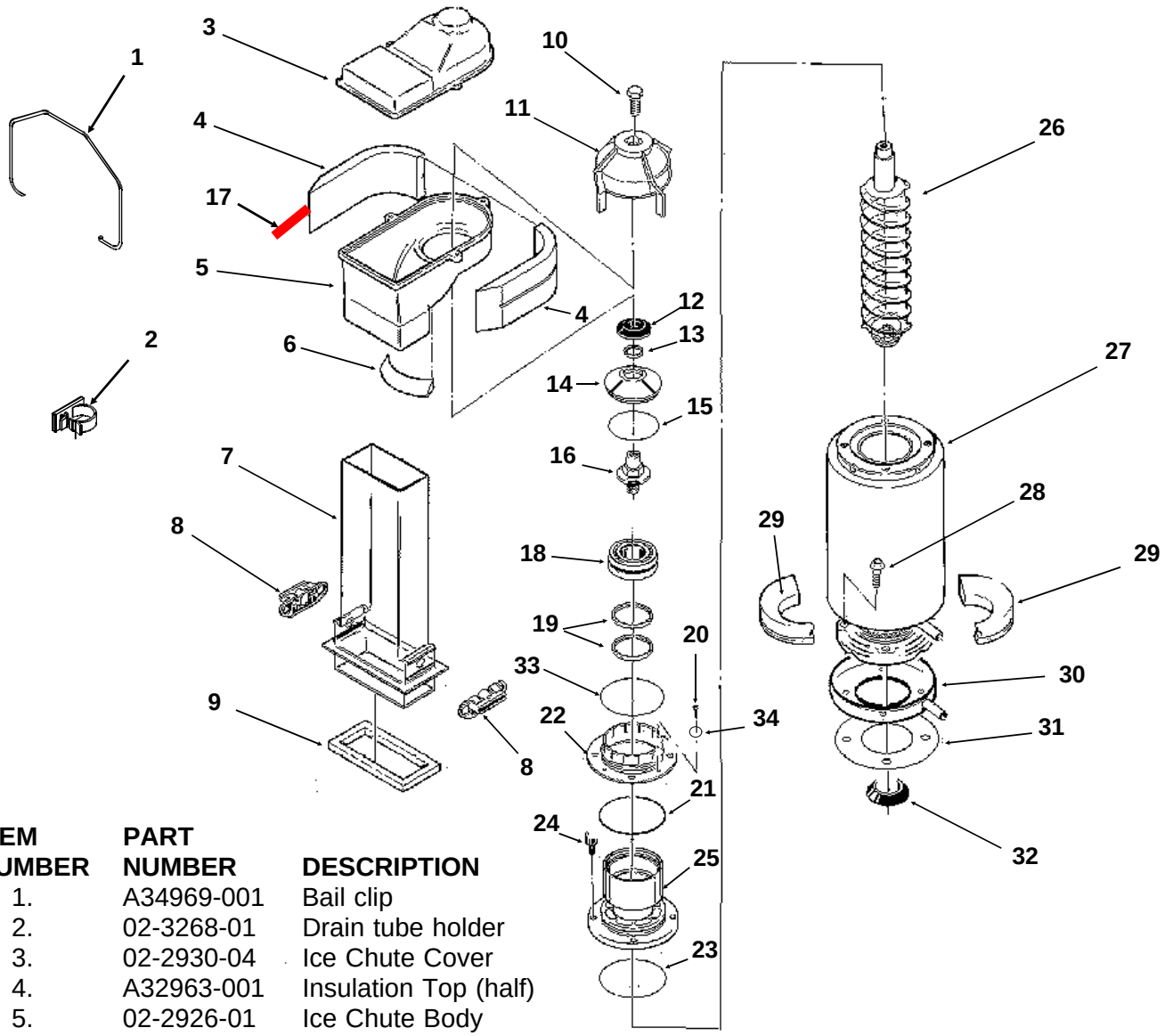


| ITEM NUMBER | PART NUMBER | DESCRIPTION |
|---|---|---|
| 1. | A34969-001 | Bail clip |
| 2. | 02-3268-01 | Drain tube holder |
| 3. | 02-2930-04 | Ice Chute Cover |
| 4. | A32963-001 | Insulation Top (half) |
| 5. | 02-2926-01 | Ice Chute Body |
| 6. | A33102-001 | Insulation Collar Inside |
| 7. | 02-2929-04 | Ice Chute Lower |
| 8. | A37708-021 | Bin Controls Assy. (set of 2) |
| 9. | A32930-001 | Chute Gasket |
| 10. | 03-1405-52 | Hex Cap Screw |
| 11. | 02-3001-01 | Ice Sweep |
| 12. | 13-0871-01 | Water Shed |
| 13. | 02-2978-01 | Lip Seal |
| 14. | 02-3128-20 | Breaker Cover |
| 15. | 13-0617-54 | O-Ring |
| 16. | 08-0660-01 | Auger Stud, thrust Washer |
| 17. | A35419-020 | Strap kit |
| 18. | A34559-020 | Bearing |
| 19. | 02-2977-01 | Lip Seal |
| 20. | 03-1405-27 | Screw |
| 21. | 13-0617-52 | O-Ring |
| 22. | 02-2916-01 | Slotted Collar |
| 23. | 13-0617-45 | O-Ring |
| 24. | 03-1544-08 | Soc. Head Screw |
| 25. | A34505-020 | Breaker (Divider) (includes 18 & 19) |
| 26. | A38071-022 | Auger |
| 27. | A32890-020 | Evaporator |
| 28. | 03-1420-03 | Cap Screw |
| 29. | A32962-001 | Insulation Bot. (half) |
| 30. | 02-3837-01 | Drip Pan |
| 31. | 13-0704-00 | Drip Pan Gasket |
| 32. | 13-0868-01 | Water Shed |
| 33. | 13-0617-49 | O-Ring |
| 34 | 03-1408-36 | Washer |

# NME1850 & FME2400 SERVICE PARTS
## Control Box

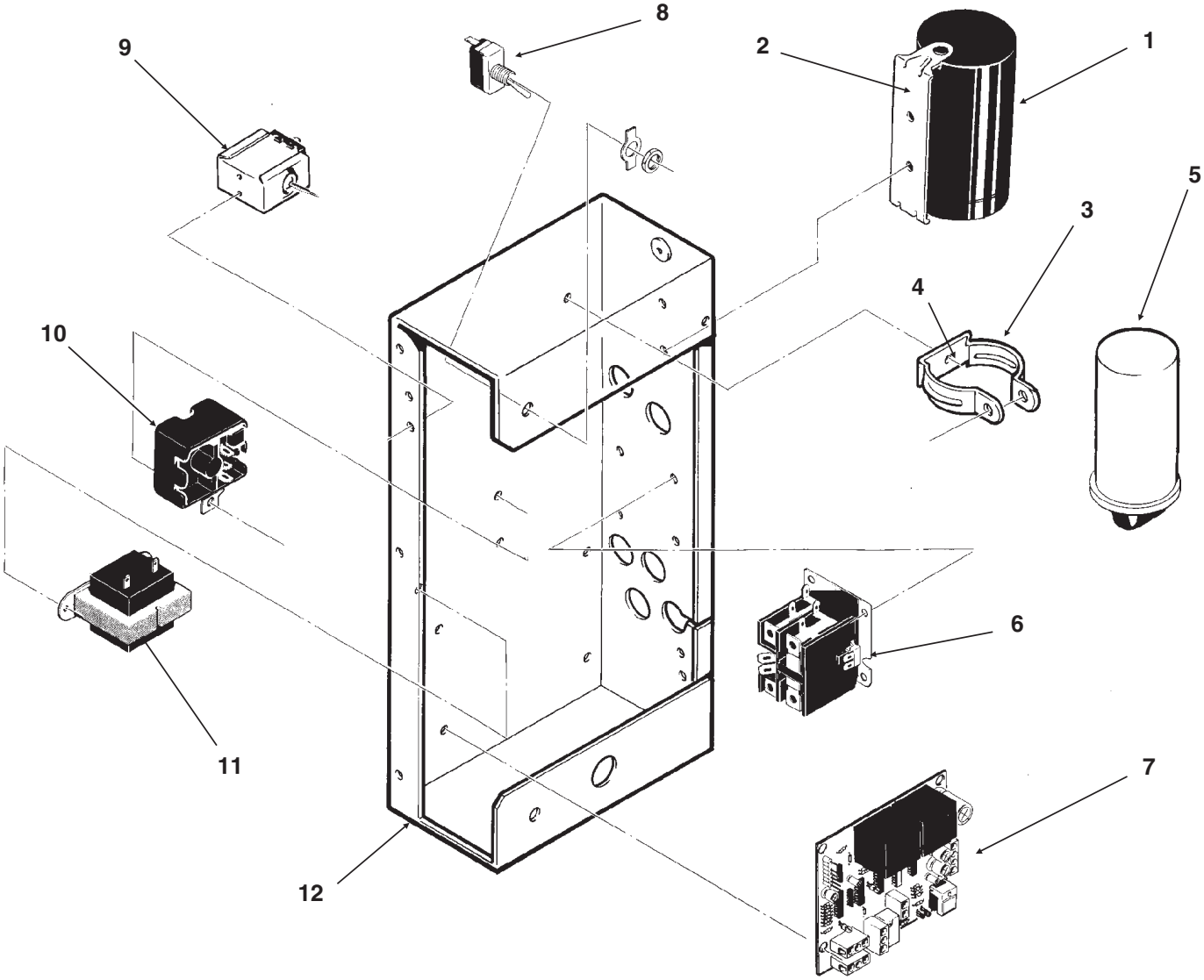


| ITEM NUMBER | PART NUMBER | DESCRIPTION |
|---|---|---|
| 1 | 18-1901-54 | Start Capacitor, 60 Hz |
| | 18-1901-53 | Start capacitor, 50 Hz |
| | 18-2200-38 | Start Capacitor Cap. |
| 2. | 18-2200-39 | Start Capacitor Bracket |
| | 03-1638-04 | Screw |
| | 03-1417-15 | Lockwasher |
| 3. | A32872-001 | Run Cap Bracket |
| | 03-1652-02 | Bolt |
| | 03-0255-04 | Wing Nut |
| 4. | 03-1638-03 | Screw |
| 5. | 18-1902-45 | Run Capacitor, 60 Hz |
| | 18-1902-53 | Run capacitor, 50 Hz |
| 6. | 12-2469-02 | Single Phase Contactor |
| | 12-0739-02 | Three Phase Contactor |

| ITEM NUMBER | PART NUMBER | DESCRIPTION |
|---|---|---|
| 7 | A37750-021 | Circuit Board |
| 8. | 12-0426-01 | Master Switch |
| 9. | 11-0447-20 | Low Pressure Control |
| 10 | 18-1903-33 | Potential Relay 60 Hz |
| | 18-1903-29 | Potential relay, 50 Hz |
| 11. | 12-2285-22 | Transformer |
| 12 | no number | Control Box |
| NOT ILLUSTRATED | | |
| 13. | 12-2340-01 | 4 Pin Plug Assy |
| | (Transformer to Circuit Board) | |
| 14 | A34055-001 | Control Box Cover |

# NME1850 & FME2400 SERVICE PARTS

***A I R  A N D  W A T E R  C O O L E D ,  2 0 8 - 2 3 0 / 6 0 / 1***

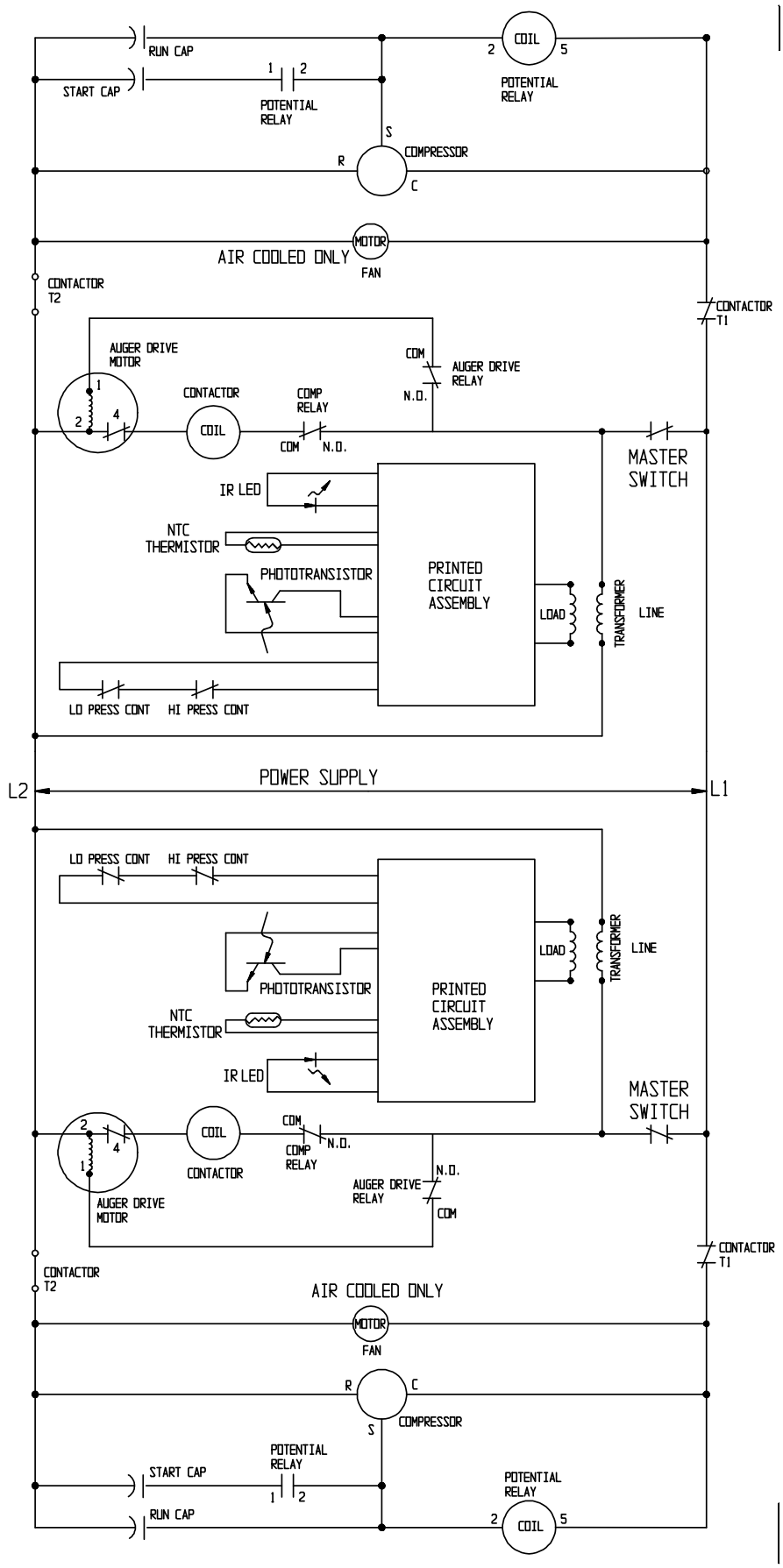

# NME1850 & FME2400 SERVICE PARTS

*AIR AND WATER COOLED, 208-230/60/1*

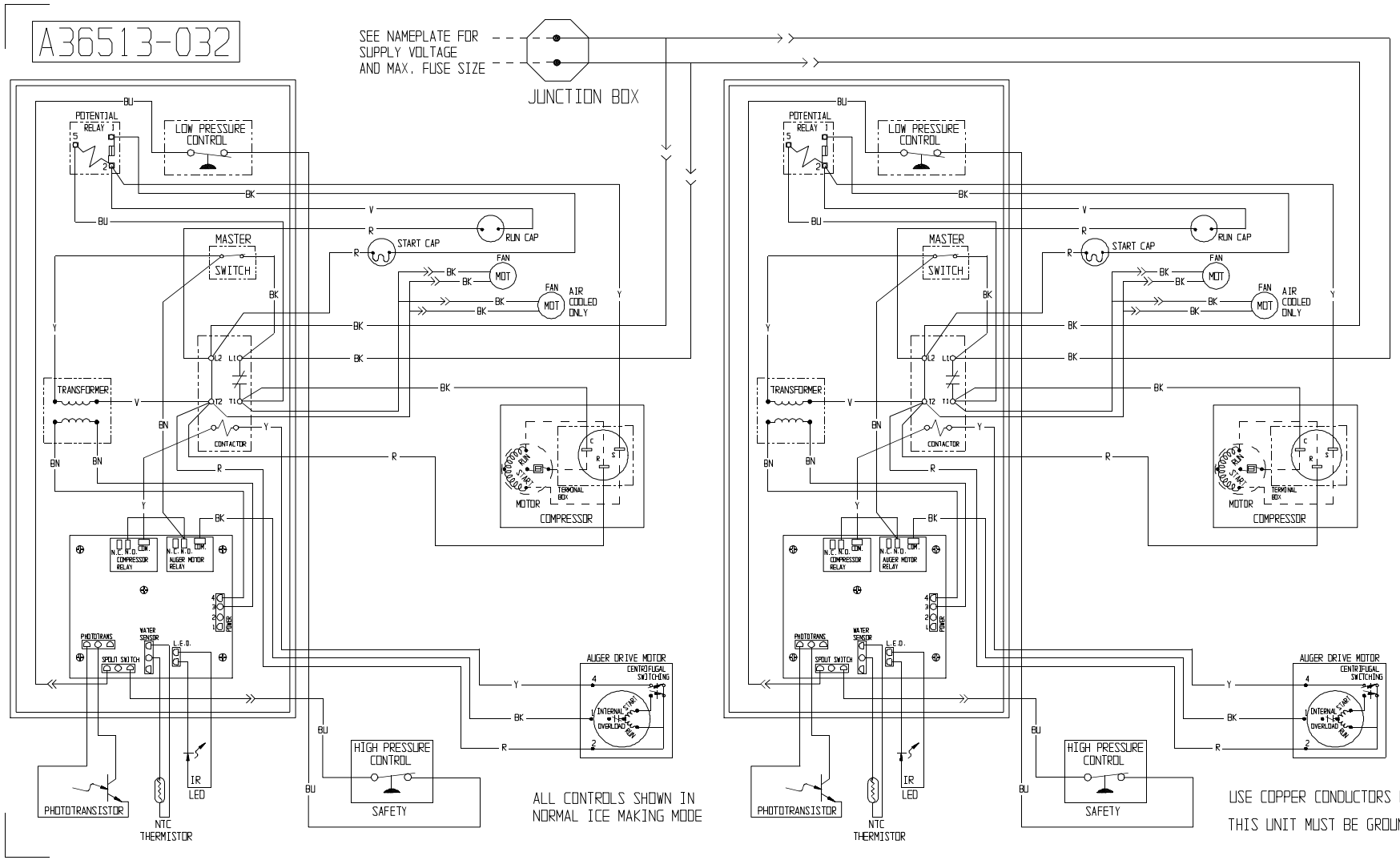

# NME1850 & FME2400 SERVICE PARTS

***A I R  A N D  W A T E R  C O O L E D ,  2 0 8 - 2 3 0 / 6 0 / 3***

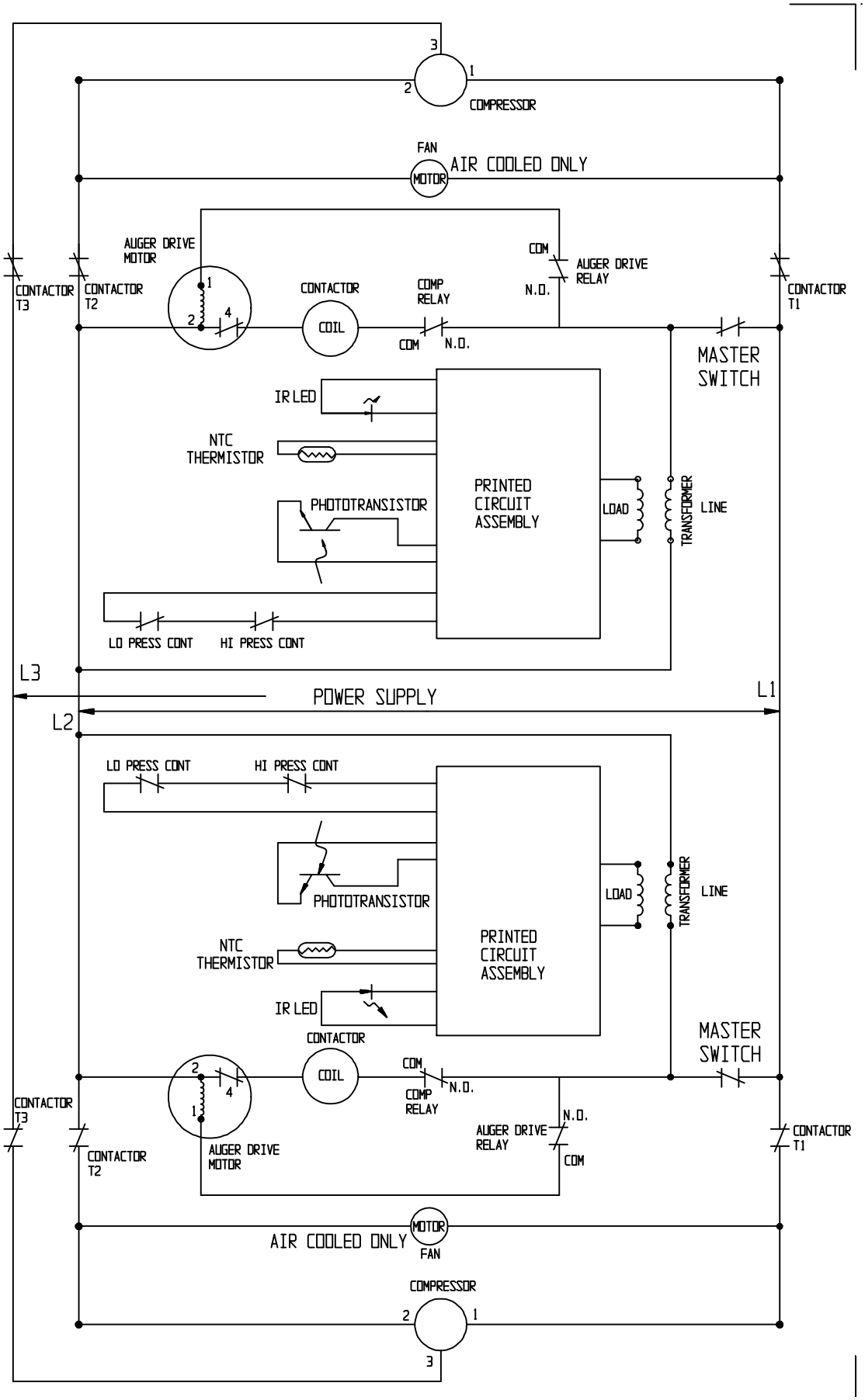

# NME1850 & FME2400 SERVICE PARTS
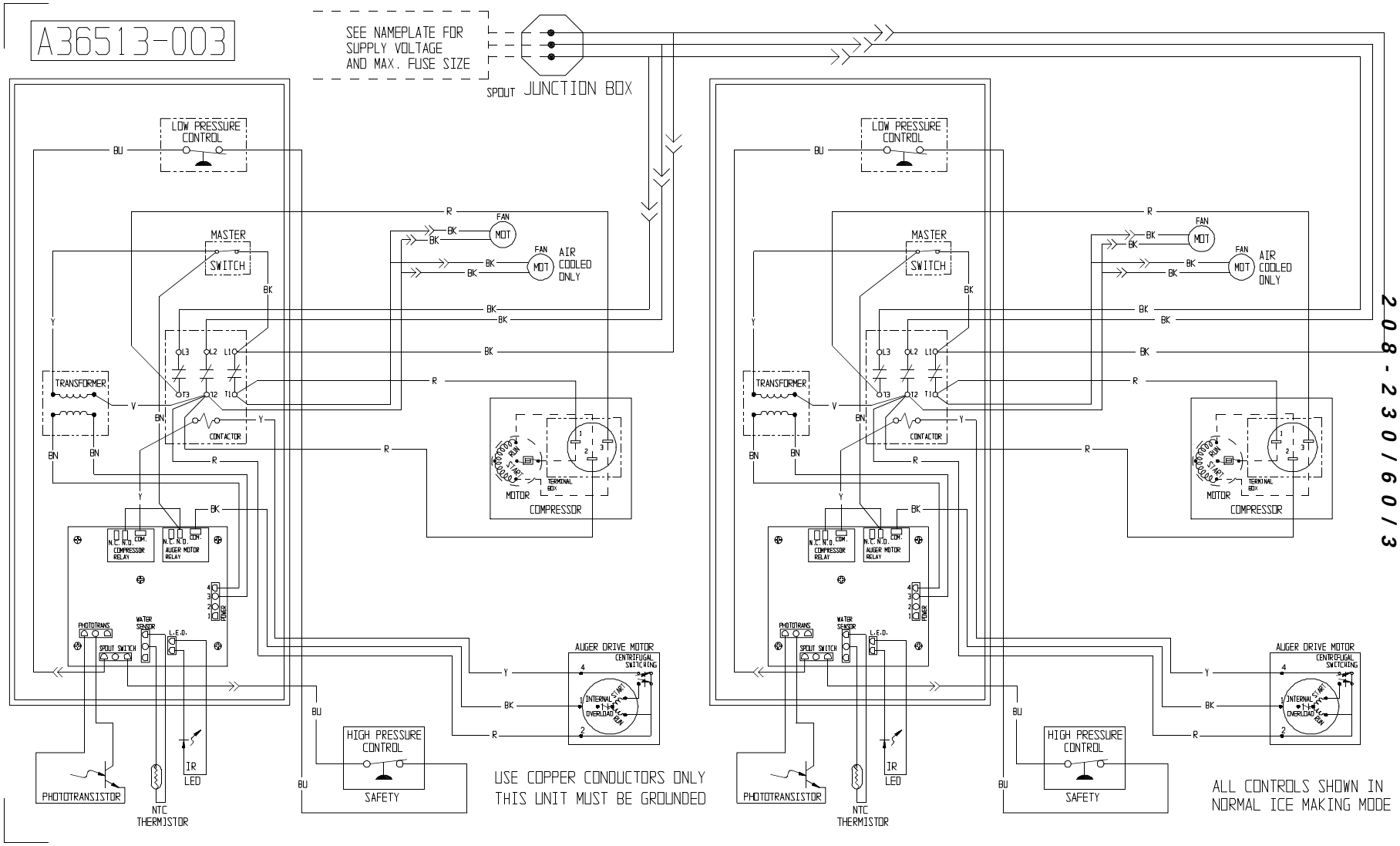
*AIR AND WATER COOLED, 208-230/60/3*