NME950R & FME1200R SERVICE PARTS

This parts list contains the service parts and wiring diagrams for this model. Check the model number in question to be sure that it is applicable to this parts list.

TABLE OF CONTENTS

Cabinet 2

Refrigeration 3

Water 4

Gearmotor 5

NME Evaporator 6

FME Evaporator 7

Control Box 8

Remote Condenser 9

Wiring Diagrams 10

NME950R & FME1200R SERVICE PARTS
Cabinet Assembly

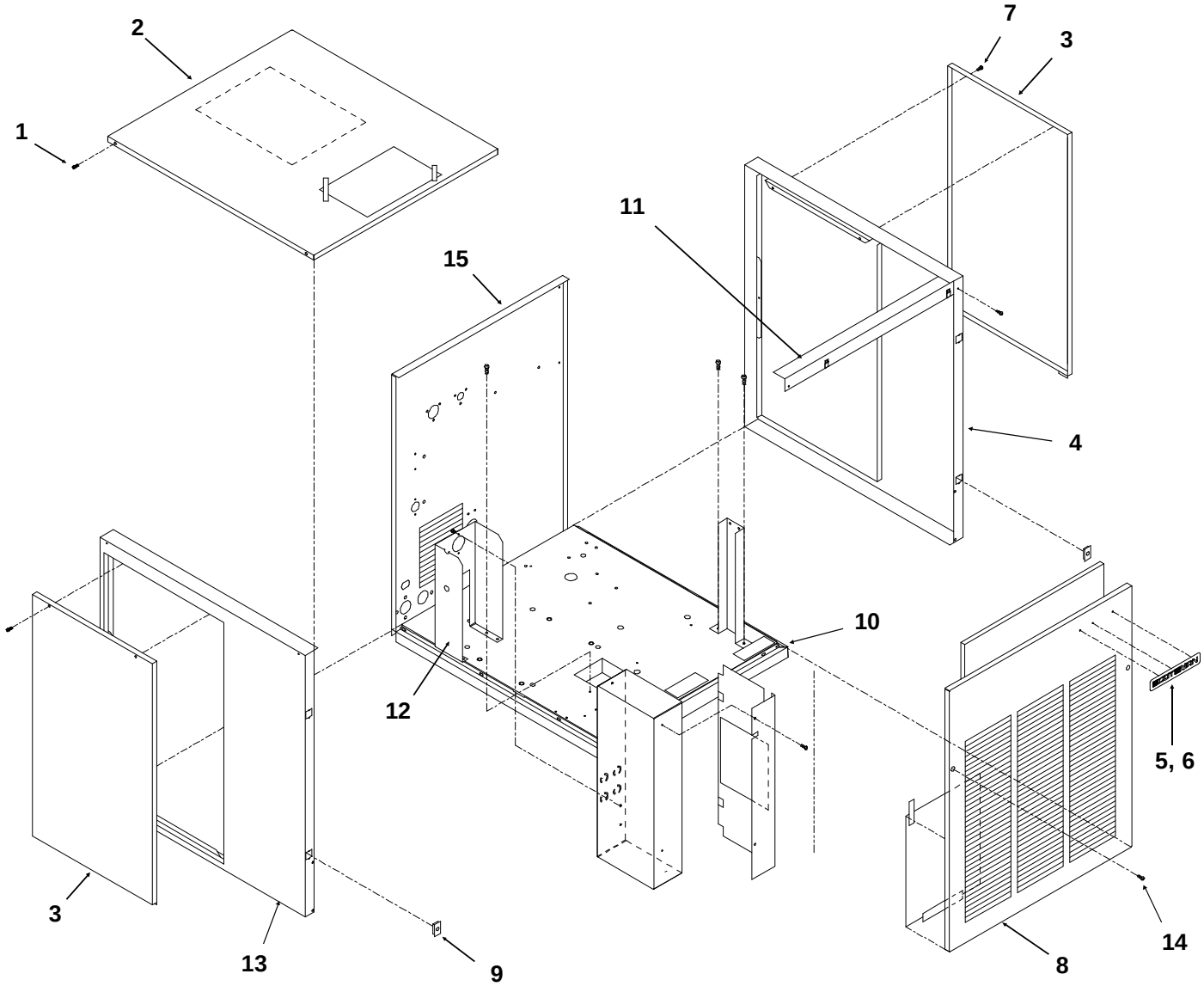

ITEM NUMBER	PART NUMBER	DESCRIPTION
1	03-1531-01	Screw
2	A33256-001	Top Panel, Painted
	A33256-002	Top Panel, S.S.
3	A34038-001	Service Panel, Painted
	A34038-002	Service Panel, S.S.
4	A33292-001	Right Side Panel, Painted
	A33292-002	Right Side Panel, S.S.
5	03-0271-00	Speed Clip
6	15-0711-01	Emblem, sandalwood
	15-0711-02	Emblem, grey
7	03-1404-12	Screw
8	A33255-001	Front Panel, Painted
	A33255-002	Front Panel, S.S.

ITEM NUMBER	PART NUMBER	DESCRIPTION
9	02-0836-00	Catch
	15-0411-00	Strike (on front panel)
10	A35890-001	Base
11	A34348-001	Ft. brace
12	A34039-001	Control Box Support
13	A32435-001	Left Side Panel, Painted
	A32435-002	Left Side Panel, S.S.
14	03-1419-22	Screw
15	A35924-001	Rear Panel, Painted
	A35924-002	Rear panel, stainless

NME950R & FME1200R SERVICE PARTS
Refrigeration System

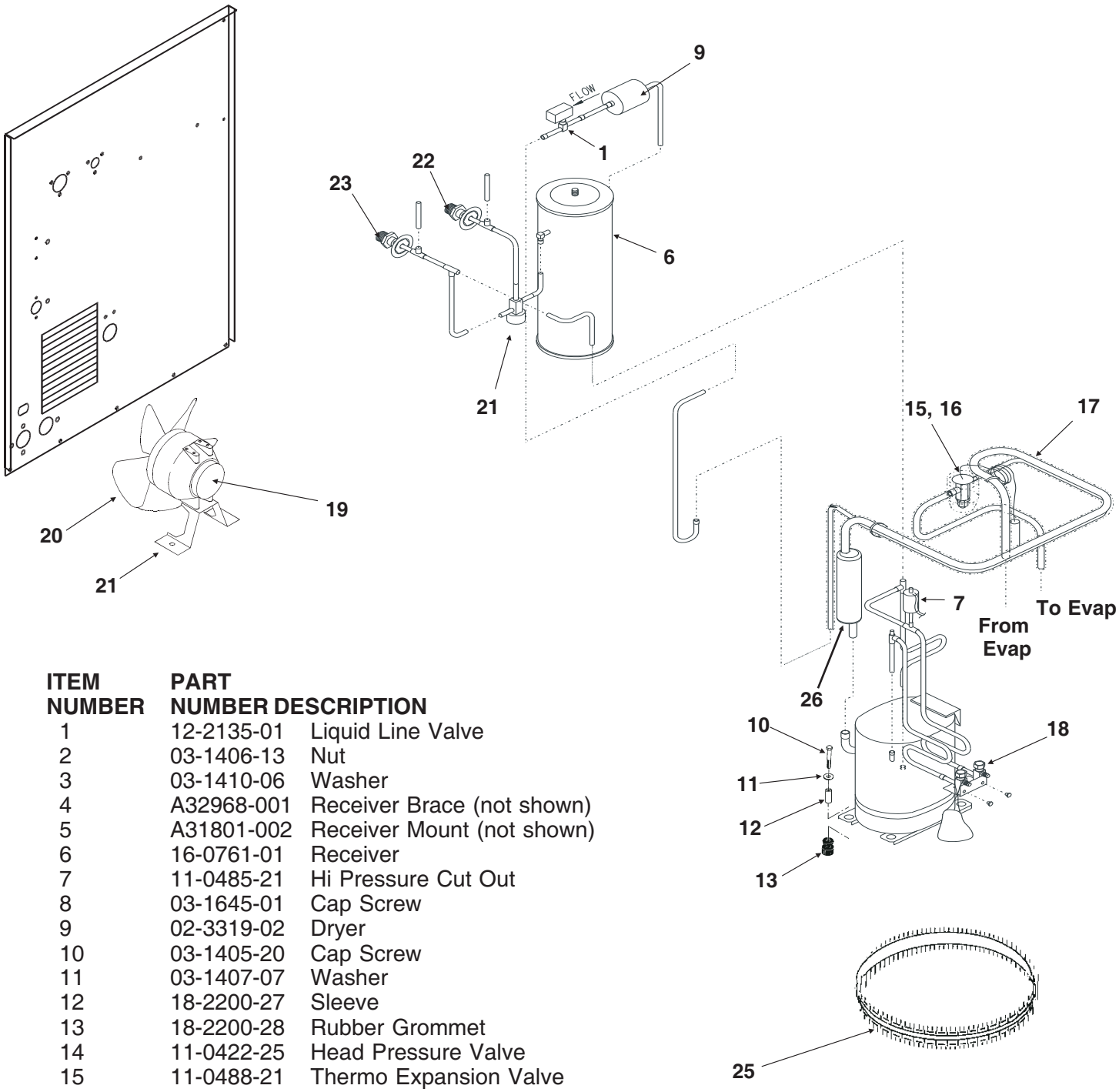

ITEM NUMBER	PART NUMBER	DESCRIPTION
1	12-2135-01	Liquid Line Valve
2	03-1406-13	Nut
3	03-1410-06	Washer
4	A32968-001	Receiver Brace (not shown)
5	A31801-002	Receiver Mount (not shown)
6	16-0761-01	Receiver
7	11-0485-21	Hi Pressure Cut Out
8	03-1645-01	Cap Screw
9	02-3319-02	Dryer
10	03-1405-20	Cap Screw
11	03-1407-07	Washer
12	18-2200-27	Sleeve
13	18-2200-28	Rubber Grommet
14	11-0422-25	Head Pressure Valve
15	11-0488-21	Thermo Expansion Valve
16	A32961-020	Insulation Kit for TXV
17	A36496-001	Suction Line
18	16-0832-20	Access valve
18a	16-0832-02	Stem cap
18b	16-0832-03	Core cap
19	12-1576-02	Fan motor
20	18-8708-01	Fan blade
21	A35246-001	Fan bracket
22	16-0850-03	3/8" Male half
23	16-0850-01	1/2" Male half

ITEM NUMBER	PART NUMBER	DESCRIPTION
24	18-8768-22	Compressor 208-230/60/1
		Overload for above is internal
	18-8768-24	Compressor 200-230/60/3
		Overload for above is internal
25	12-1868-03	Crankcase Heater

Note: Compressors include a new HFC dryer.

26.	16-0778-21	Accumulator

NME950R & FME1200R SERVICE PARTS
Water System, Water Seal

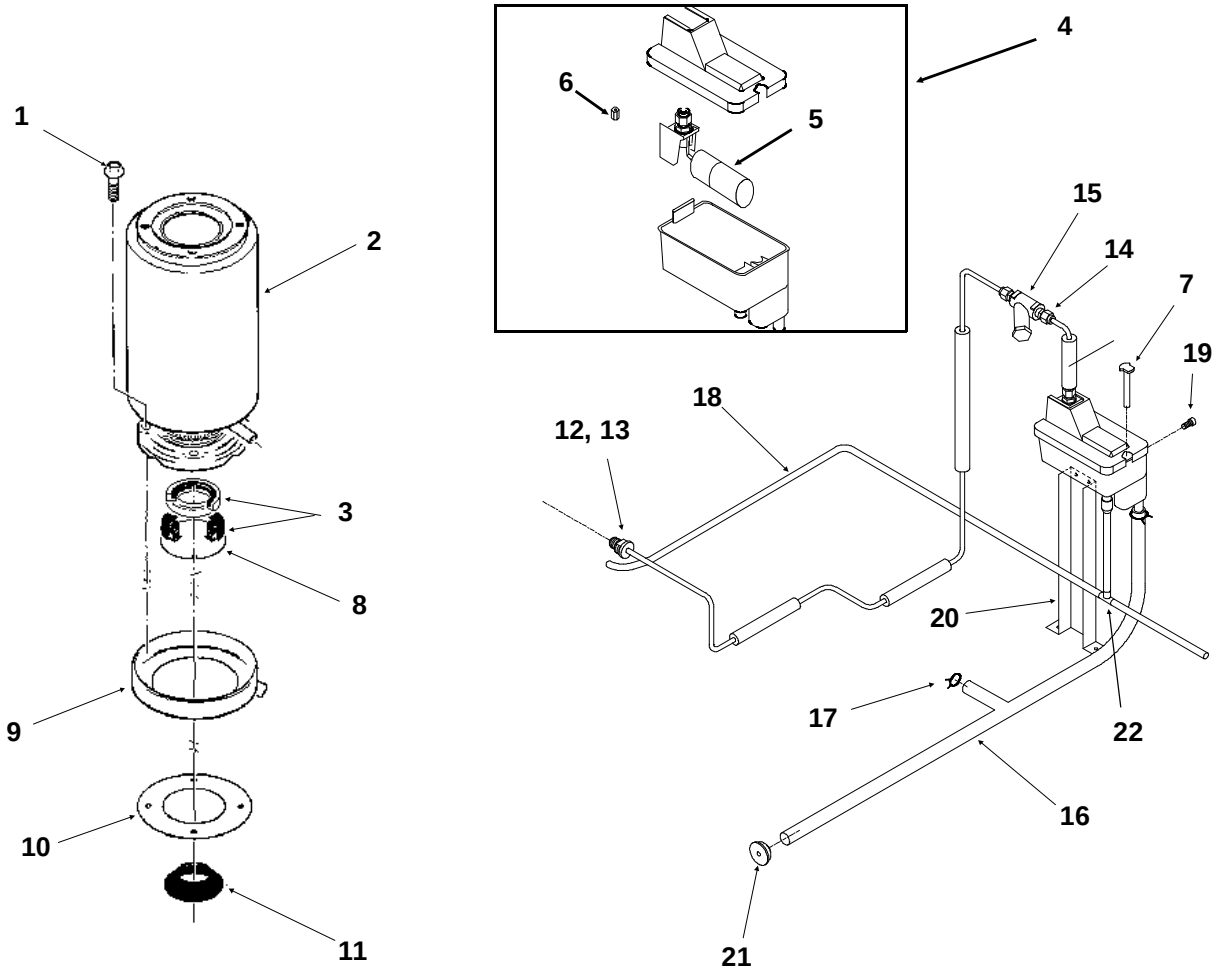

ITEM NUMBER	PART NUMBER	DESCRIPTION
1	03-1420-03	Cap Screw
2	A32890-020	Evaporator
3	02-0929-23	Water Seal
4	02-3266-20	Reservoir & valve
5	02-3266-21	Float valve
6	02-3266-22	Plunger/seat
7	A33101-022	Water Level Sensor
8	A32777-001	Retaining Ring for Seal
9	A32050-001	Drip Pan
10	13-0704-00	Gasket
11	13-0868-01	Water Shed
12	A27318-001	Water Inlet Fitting
13	03-1394-01	Pal Nut
14	16-0791-01	Coupling union

ITEM NUMBER	PART NUMBER	DESCRIPTION
15	16-0162-00	Strainer
16	A36154-001	Evap. water inlet tube
17	02-1338-00	Hose clamp
18	13-0079-03	Res. overflow hose
19	03-1639-03	Screw
20	A36078-002	Reservoir bracket
21	13-0840-01	Rubber cap
22	16-0670-02	Tee

NME950R & FME1200R SERVICE PARTS
Gearmotor

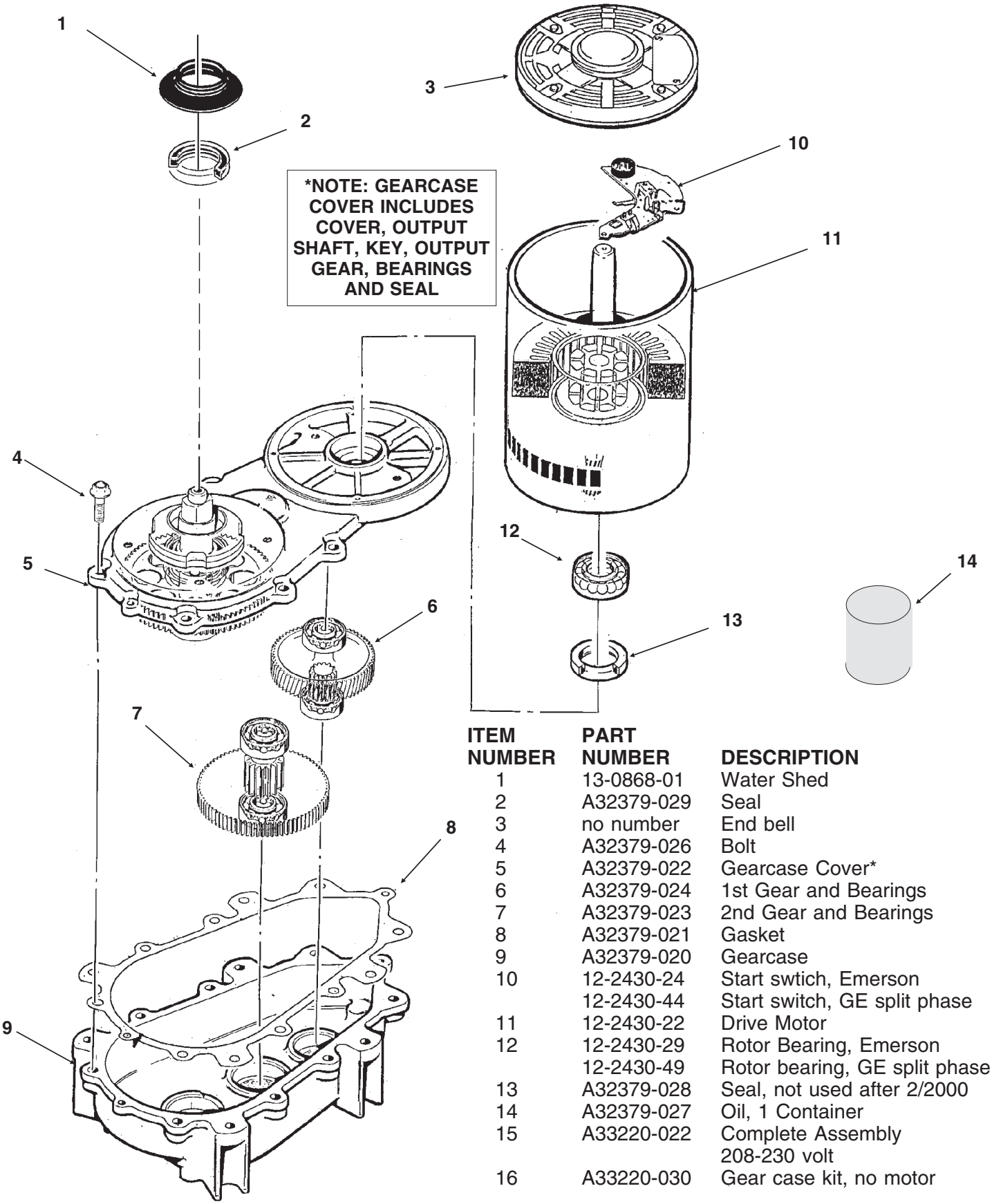

ITEM NUMBER	PART NUMBER	DESCRIPTION
1	13-0868-01	Water Shed
2	A32379-029	Seal
3	no number	End bell
4	A32379-026	Bolt
5	A32379-022	Gearcase Cover*
6	A32379-024	1st Gear and Bearings
7	A32379-023	2nd Gear and Bearings
8	A32379-021	Gasket
9	A32379-020	Gearcase
10	12-2430-24	Start swtich, Emerson
	12-2430-44	Start switch, GE split phase
11	12-2430-22	Drive Motor
12	12-2430-29	Rotor Bearing, Emerson
	12-2430-49	Rotor bearing, GE split phase
13	A32379-028	Seal, not used after 2/2000
14	A32379-027	Oil, 1 Container
15	A33220-022	Complete Assembly 208-230 volt
16	A33220-030	Gear case kit, no motor

NME950R & FME1200R SERVICE PARTS
NME Evaporator, Bin Controls

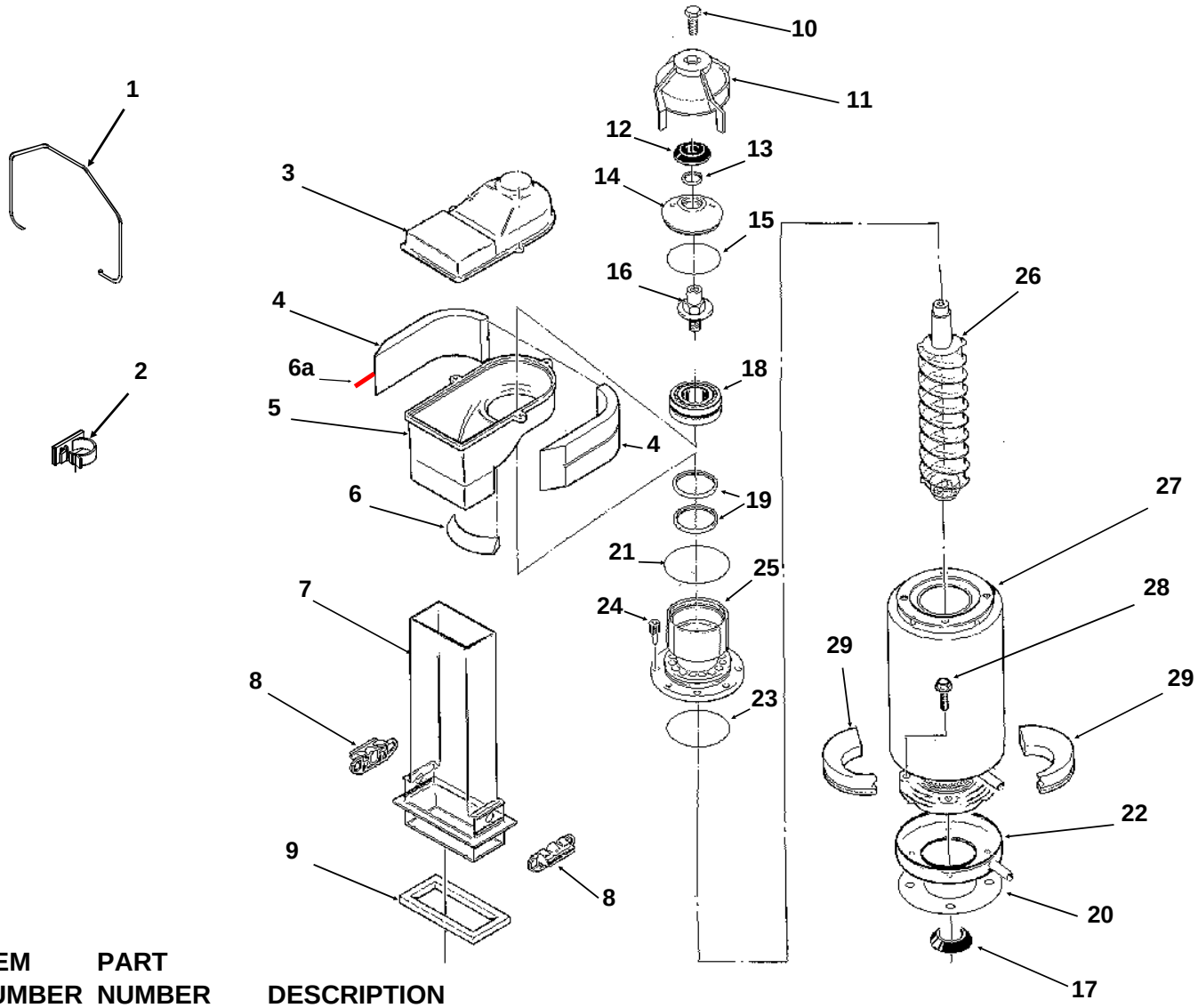

ITEM NUMBER	PART NUMBER	DESCRIPTION
1.	A34969-001	Bail clip
2.	02-3268-01	Drain tube holder
3.	02-2930-04	Ice Chute Cover
4.	A32963-001	Insulation Top (half)
5.	02-2926-01	Ice Chute Body
6.	A33102-001	Insulation Collar Inside
6a	A35419-020	Strap kit
7.	02-2929-04	Ice Chute Lower
8.	A37708-021	Bin Controls Assy. (set of 2)
9.	A32930-001	Chute Gasket
10.	03-1405-52	Hex Cap Screw
11.	02-3001-01	Ice Sweep
12.	13-0871-01	Water Shed
13.	02-2978-01	Lip Seal
14.	02-3128-20	Breaker Cover
15.	13-0617-52	O-Ring
16.	08-0660-01	Auger Stud & washer
17.	13-0868-01	Water Shed
18.	A34559-020	Bearing
19.	02-2977-01	Lip Seal
20.	13-0704-00	Drip Pan Gasket
21.	13-0617-54	O-Ring
22.	A37705-021	Drip Pan
23.	13-0617-45	O-Ring
24.	03-1544-08	Soc. Head Screw
25.	A32900-020	Breaker (includes 13,14,15, 18, 19 & 23)
26.	A38071-022	Auger
27.	A32890-020	Evaporator
28.	03-1405-41	Cap Screw
29.	A32962-001	Insulation Bot. (half)

NME950R & FME1200R SERVICE PARTS

FME Evaporator, Bin Controls

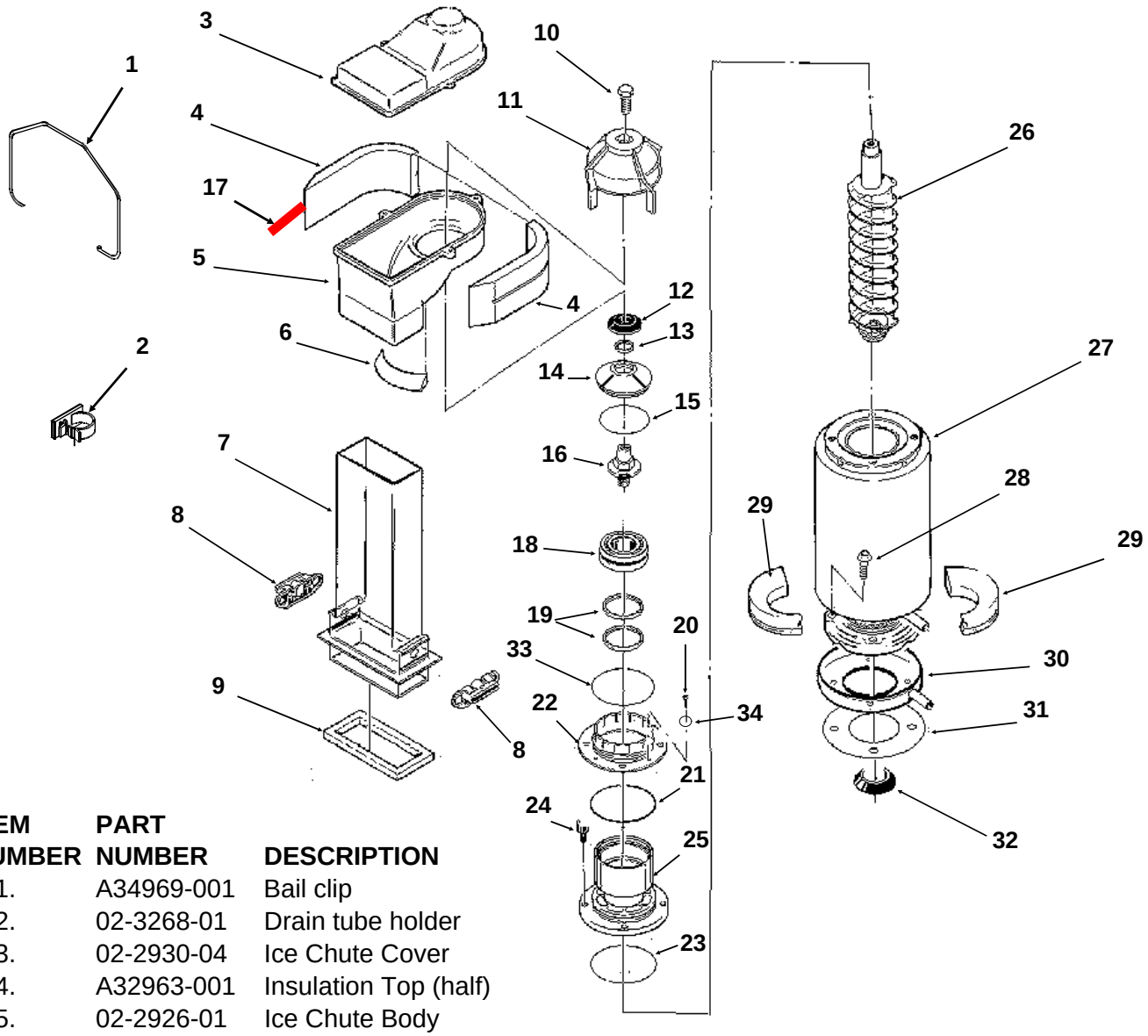

ITEM NUMBER	PART NUMBER	DESCRIPTION
1.	A34969-001	Bail clip
2.	02-3268-01	Drain tube holder
3.	02-2930-04	Ice Chute Cover
4.	A32963-001	Insulation Top (half)
5.	02-2926-01	Ice Chute Body
6.	A33102-001	Insulation Collar Inside
7.	02-2929-04	Ice Chute Lower
8.	A37708-021	Bin Controls Assy. (set of 2)
9.	A32930-001	Chute Gasket
10.	03-1405-52	Hex Cap Screw
11.	02-3001-01	Ice Sweep
12.	13-0871-01	Water Shed
13.	02-2978-01	Lip Seal
14.	02-3128-20	Breaker Cover
15.	13-0617-54	O-Ring
16.	08-0660-01	Auger Stud, thrust Washer
17.	A35419-020	Strap kit
18.	A34559-020	Bearing
19.	02-2977-01	Lip Seal
20.	03-1405-27	Screw
21.	13-0617-52	O-Ring
22.	02-2916-01	Slotted Collar
23.	13-0617-45	O-Ring
24.	03-1544-08	Soc. Head Screw
25.	A34505-020	Breaker (Divider) (includes 13, 14, 15 ,18, 19 & 23)
26.	A38071-022	Auger
27.	A32890-020	Evaporator
28.	03-1405-41	Cap Screw
29.	A32962-001	Insulation Bot. (half)
30.	A37705-021	Drip Pan
31.	13-0704-00	Drip Pan Gasket
32.	13-0868-01	Water Shed
33.	13-0617-49	O-Ring
34	03-1408-36	Washer

NME950R & FME1200R SERVICE PARTS
Control Box

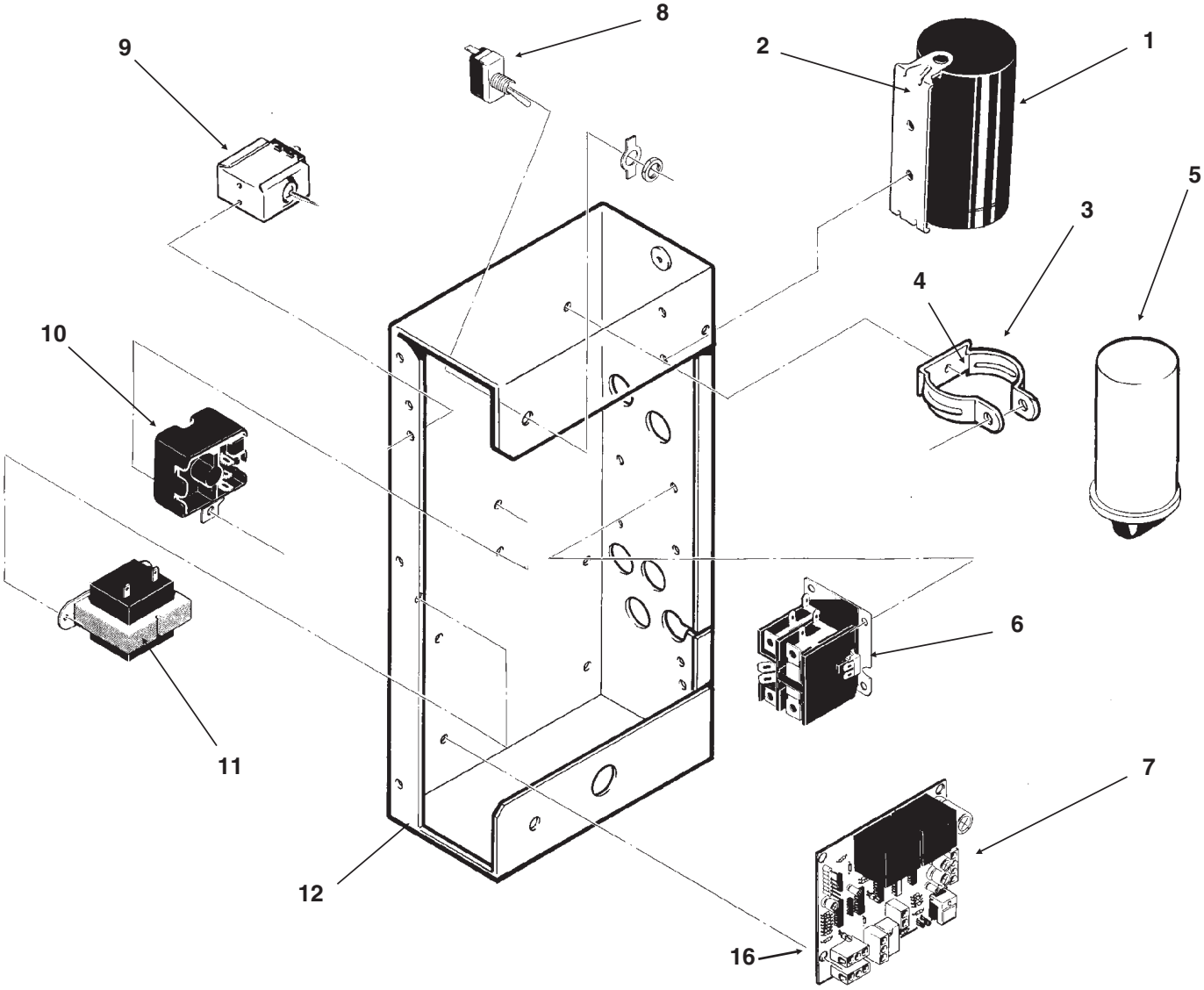

ITEM NUMBER	PART NUMBER	DESCRIPTION
1	18-1901-54	Start Capacitor
	18-2200-38	Start Capacitor Cap.
2.	18-2200-39	Start Capacitor Bracket
	03-1638-04	Screw
	03-1417-15	Lockwasher
3.	A32872-001	Run Cap Bracket
	03-1652-02	Bolt
	03-0255-04	Wing Nut
4.	03-1638-03	Screw
5.	18-1902-45	Run Capacitor
6.	12-2469-02	Single Phase Contactor
	12-0739-02	Three Phase Contactor

ITEM NUMBER	PART NUMBER	DESCRIPTION
7	A37750-021	Circuit Board
8.	12-0426-01	Master Switch
9.	11-0420-24	Pump Down Control
10	18-1903-33	Potential Relay
11.	12-2285-22	Transformer
12	no number	Control Box Assy
NOT ILLUSTRATED		
13.	12-2340-01	4 Pin Plug Assy
	(Transformer to Circuit Board)	
14.	A34055-001	Control box cover
15	12-2350-01	Spacer/screw

NME950R & FME1200R SERVICE PARTS
REMOTE CONDENSER

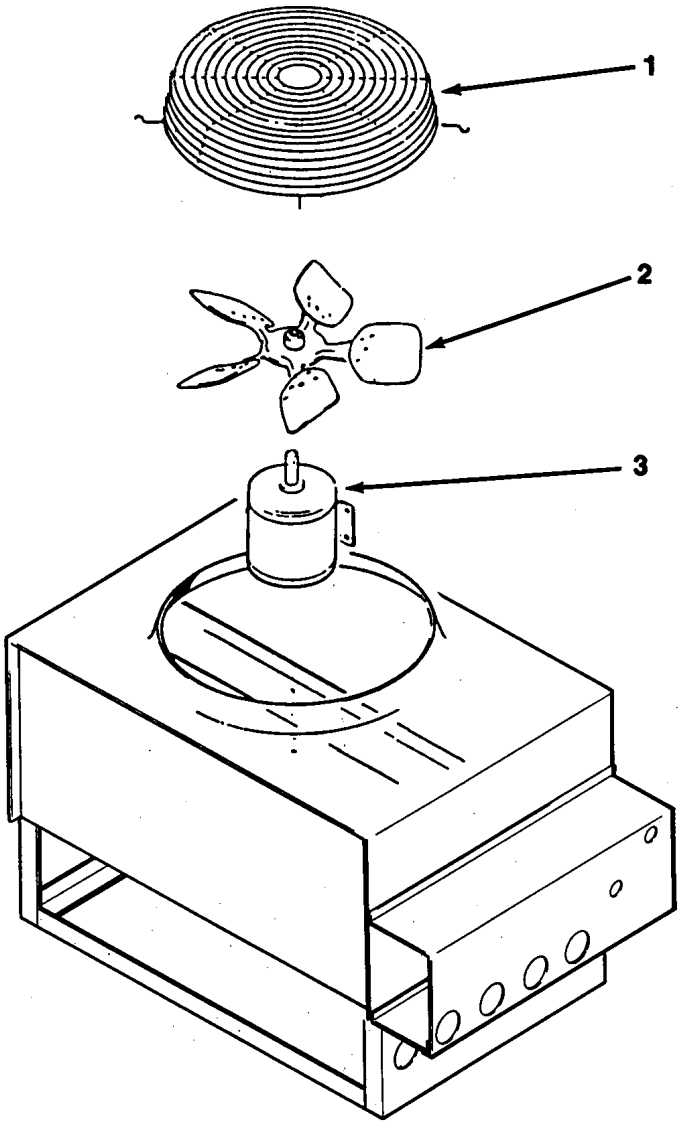

RCE501-32A or RCE502-32A

ITEM NUMBER	PART NUMBER	DESCRIPTION
1.	02-2618-01	Fan Guard
2.	18-6304-01	Fan Blade
3.	18-5301-01	Fan Motor
4.	16-0701-02	Line connection, female half 3/8"
5.	16-0701-10	Line connection, female half 1/2"

ERC151-32 or ERC302-32

ITEM NUMBER	PART NUMBER	DESCRIPTION
1	02-3575-01	Fan guard
2	18-8800-01	Fan blade
3	18-8796-32	Fan motor

NME950R & FME1200R SERVICE PARTS
Wiring Diagram, 208-230/60/1

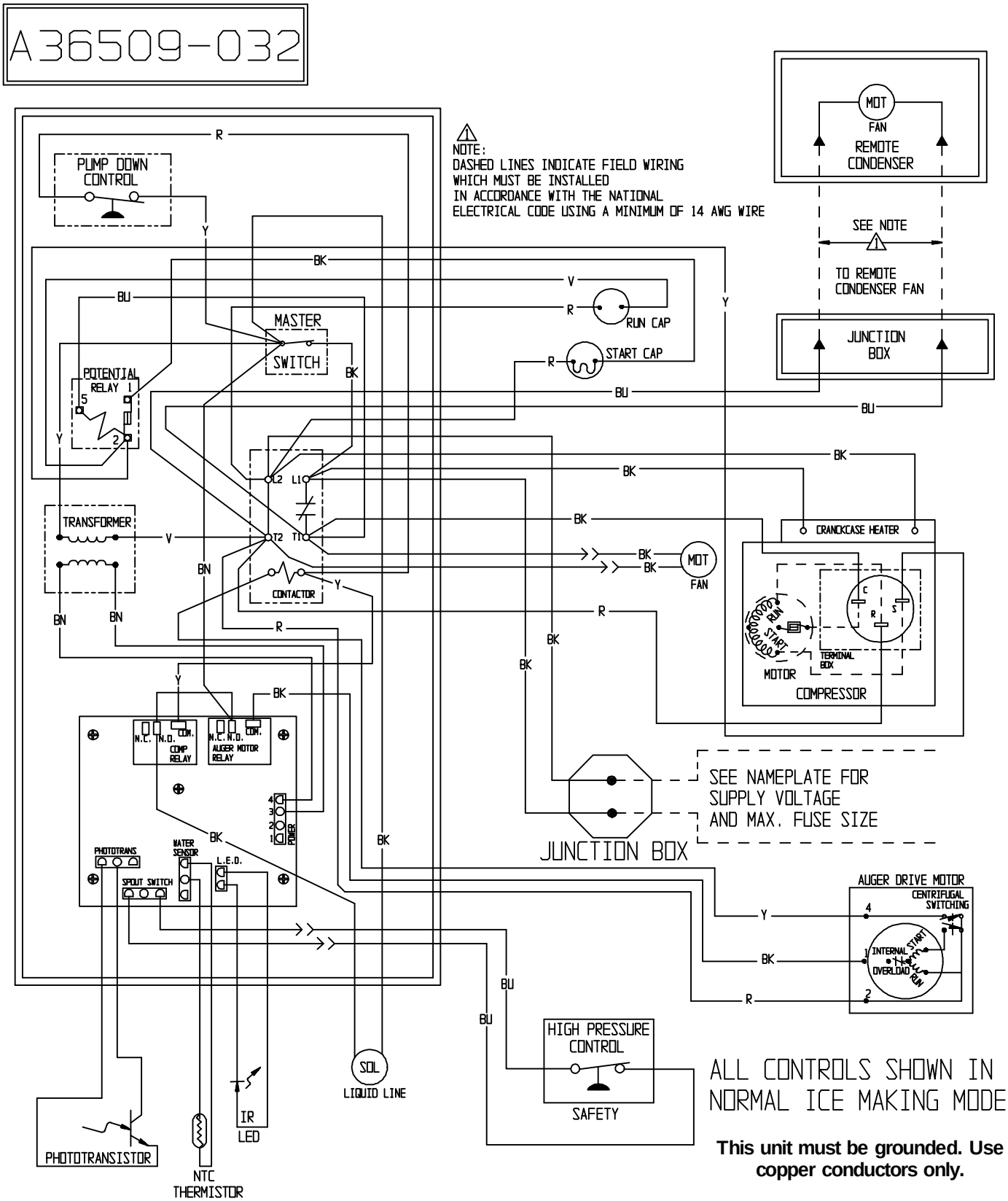

This unit must be grounded. Use copper conductors only.

NME950R & FME1200R SERVICE PARTS
Schematic Diagram, 208-230/60/1

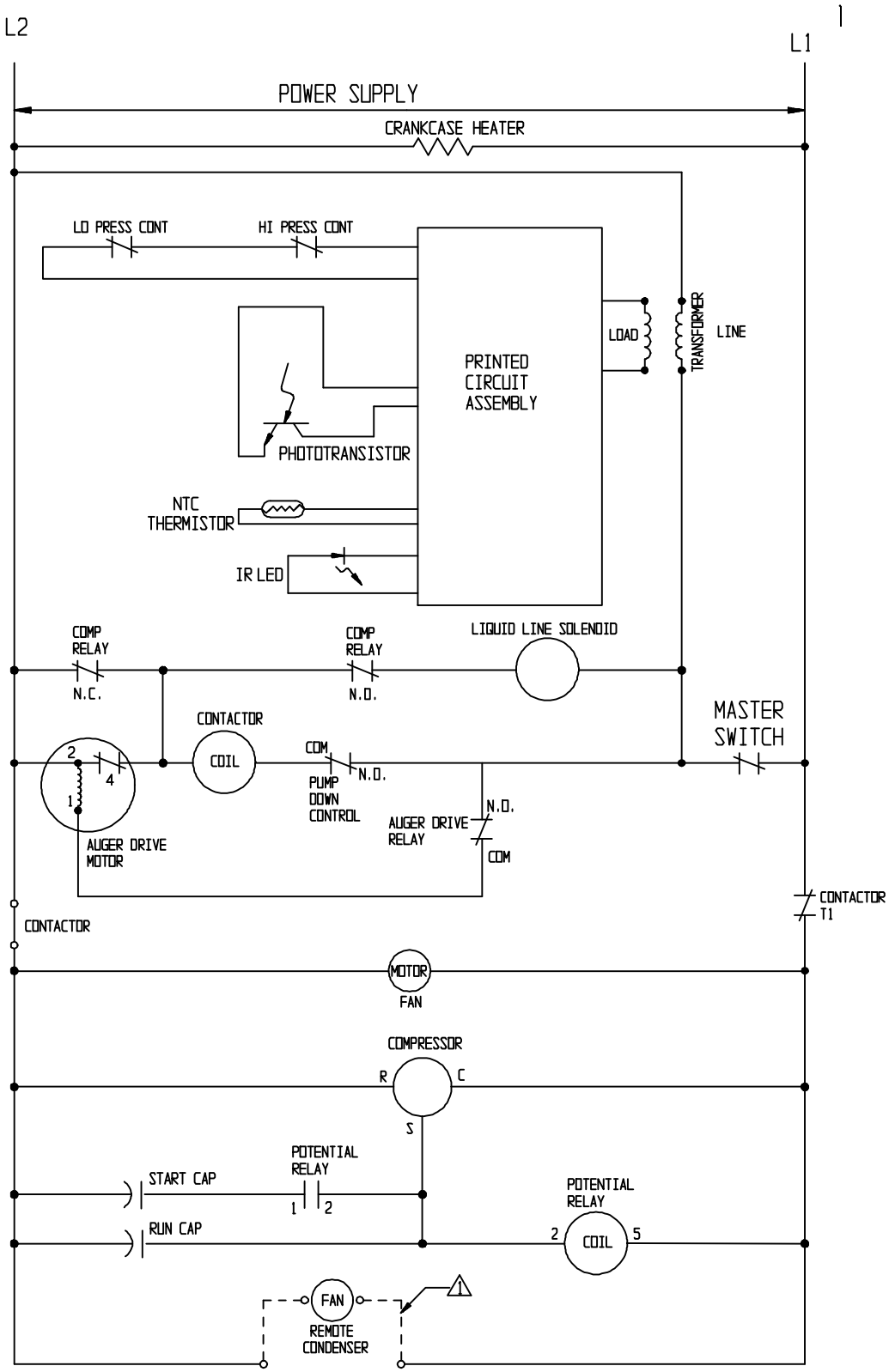

USE COPPER CONDUCTORS ONLY THIS UNIT MUST BE GROUNDED

All Controls Shown in Normal Ice Making Mode.

Note: Dashed lines indicate field wiring which must be installed in accordance with the National Electric Code Using a Minimum of 14 ga. awg. wire.

NME950R & FME1200R SERVICE PARTS
Wiring Diagram, 208-230/60/3

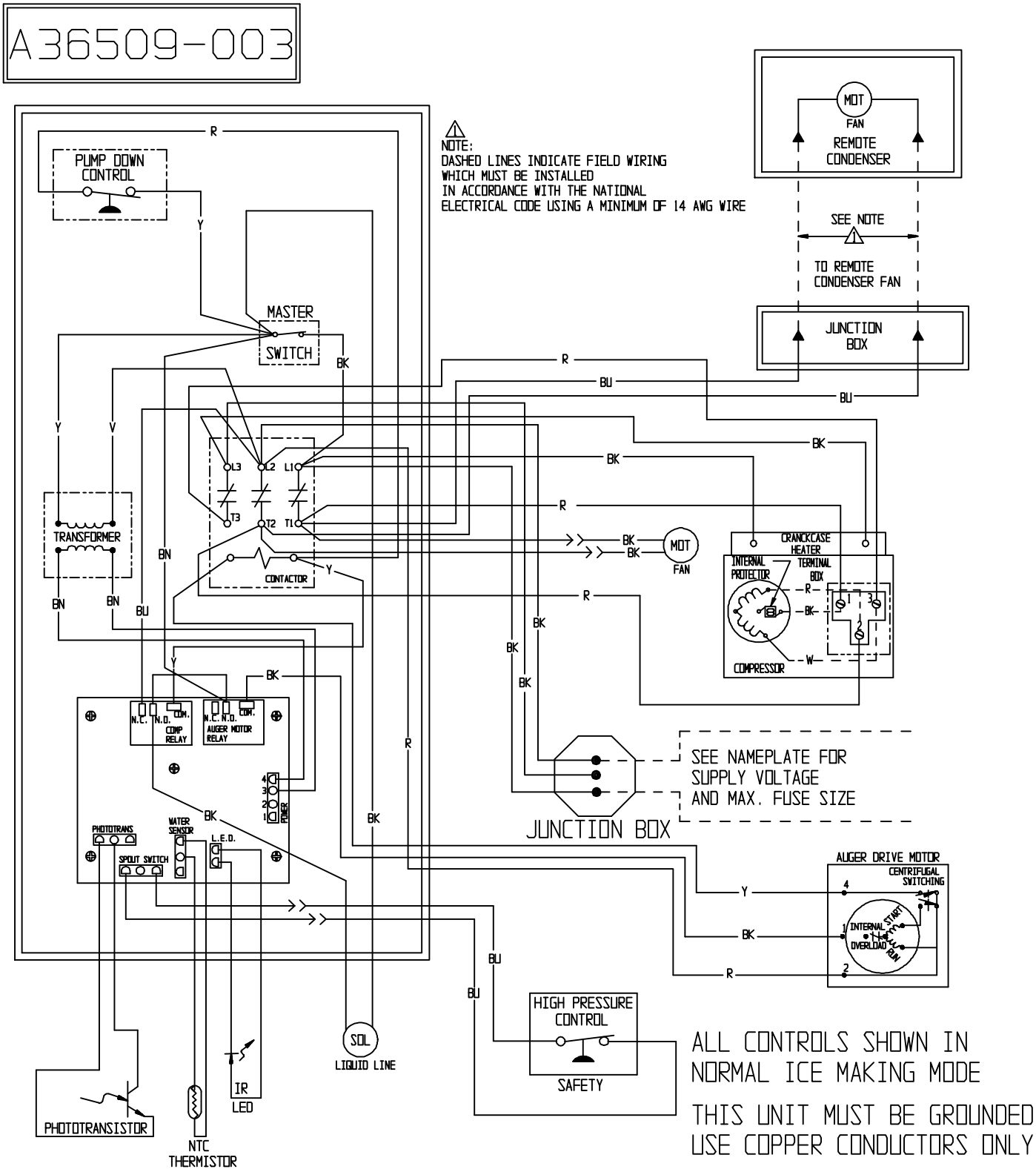

NME950R & FME1200R SERVICE PARTS
Schematic Diagram, 208-230/60/3

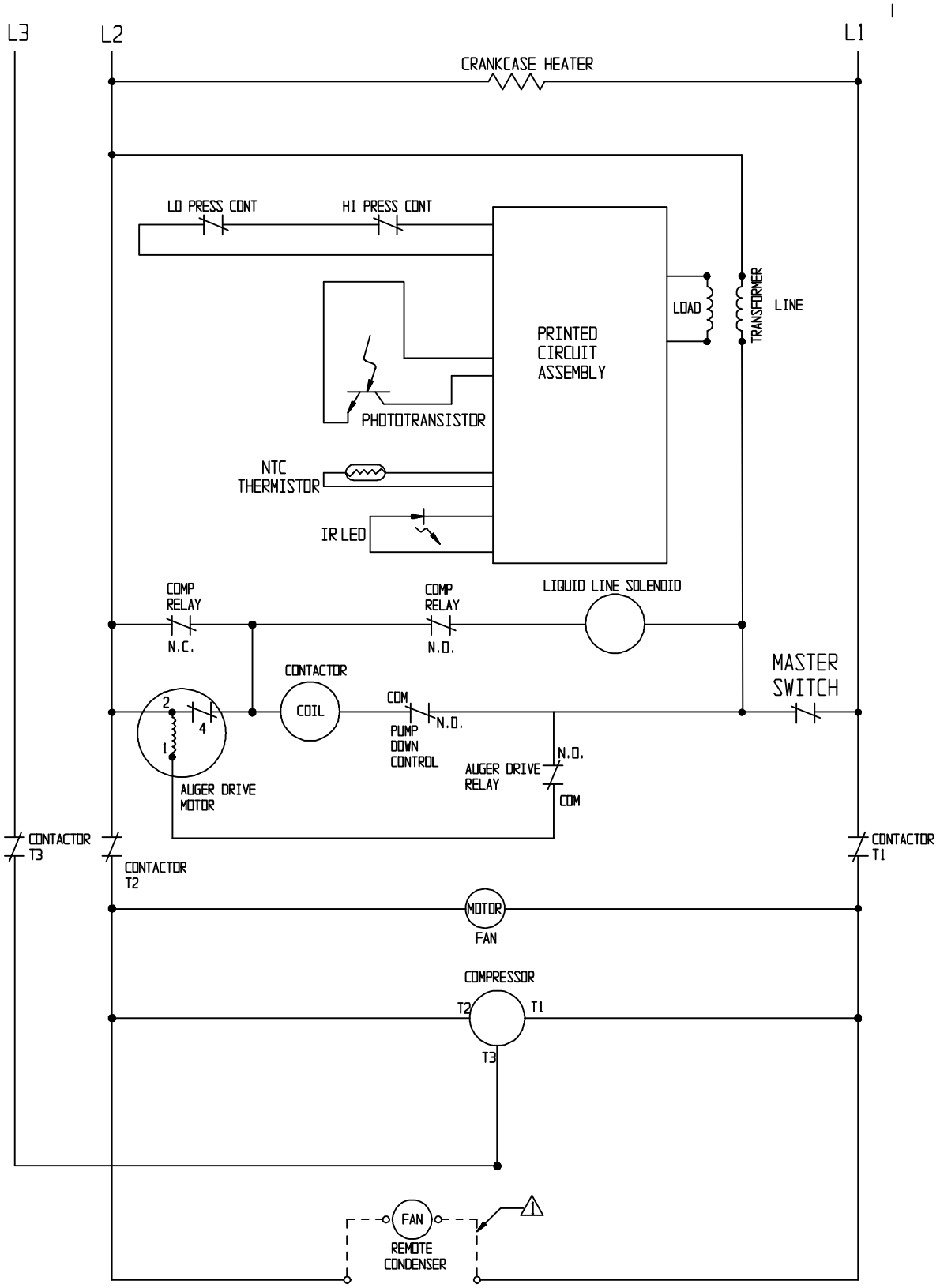

USE COPPER CONDUCTORS ONLY THIS UNIT MUST BE GROUNDED

All Controls Shown in Normal Ice Making Mode.

Note: Dashed lines indicate field wiring which must be installed in accordance with the National Electric Code Using a Minimum of 14 ga. awg. wire.