FM800 SERVICE PARTS

This parts list contains the service parts and wiring diagrams for this model. Check the model number in question to be sure that it is applicable to this parts list.
This model ice maker has been manufactured in two voltages. When looking for electrical components, check to be sure that the voltage of the part matches the voltage of the machine that needs the part.

TABLE OF CONTENTS

Cabinet 2

Air Cooled Refrigeration 3

Water Cooled Refrigeration 4

Water System 5

Gearmotor 6

Evaporator 7

Control Box 8

Wiring Diagrams 9

FM800 SERVICE PARTS

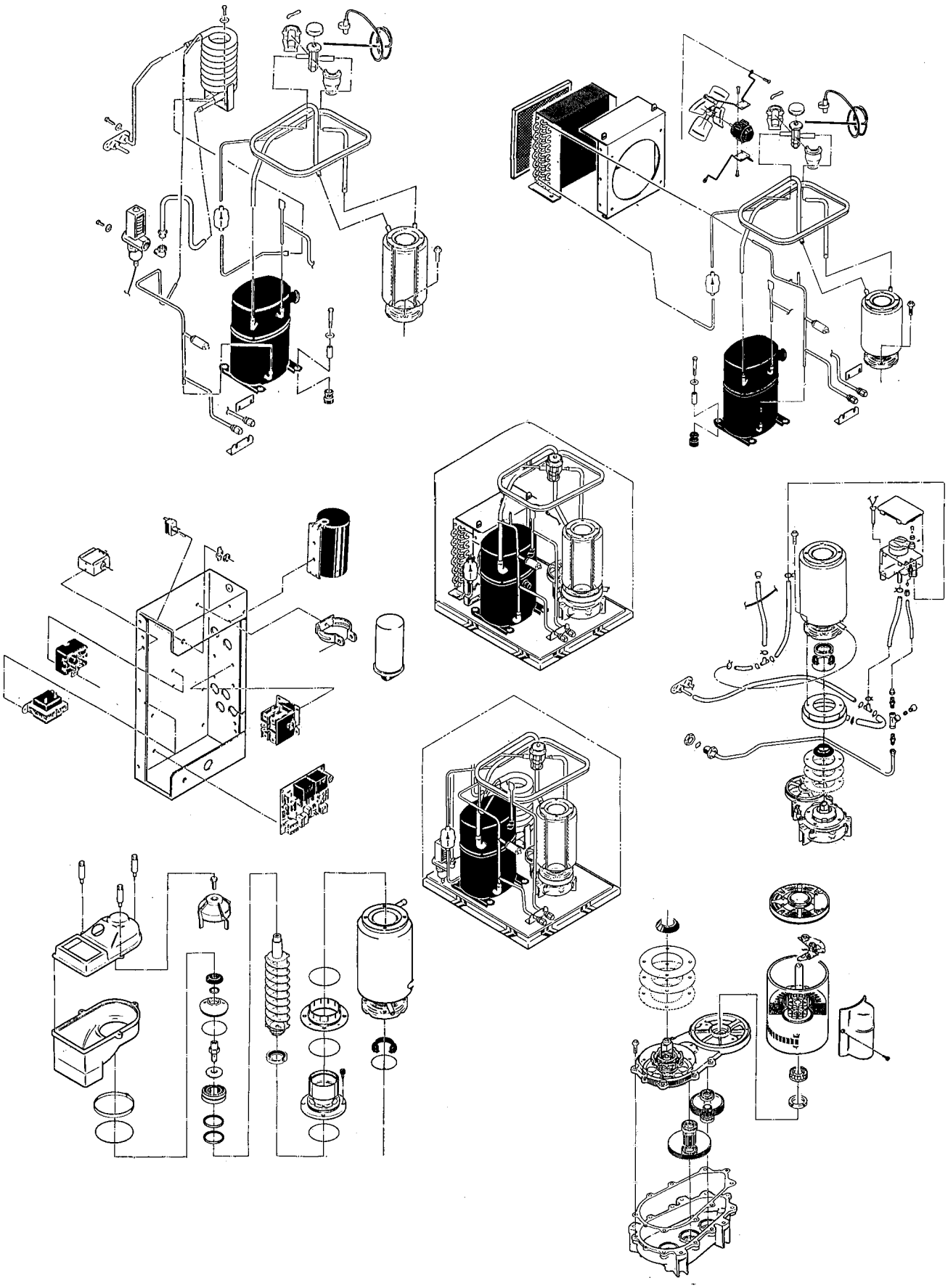

FM800 SERVICE PARTS
Cabinet Assembly

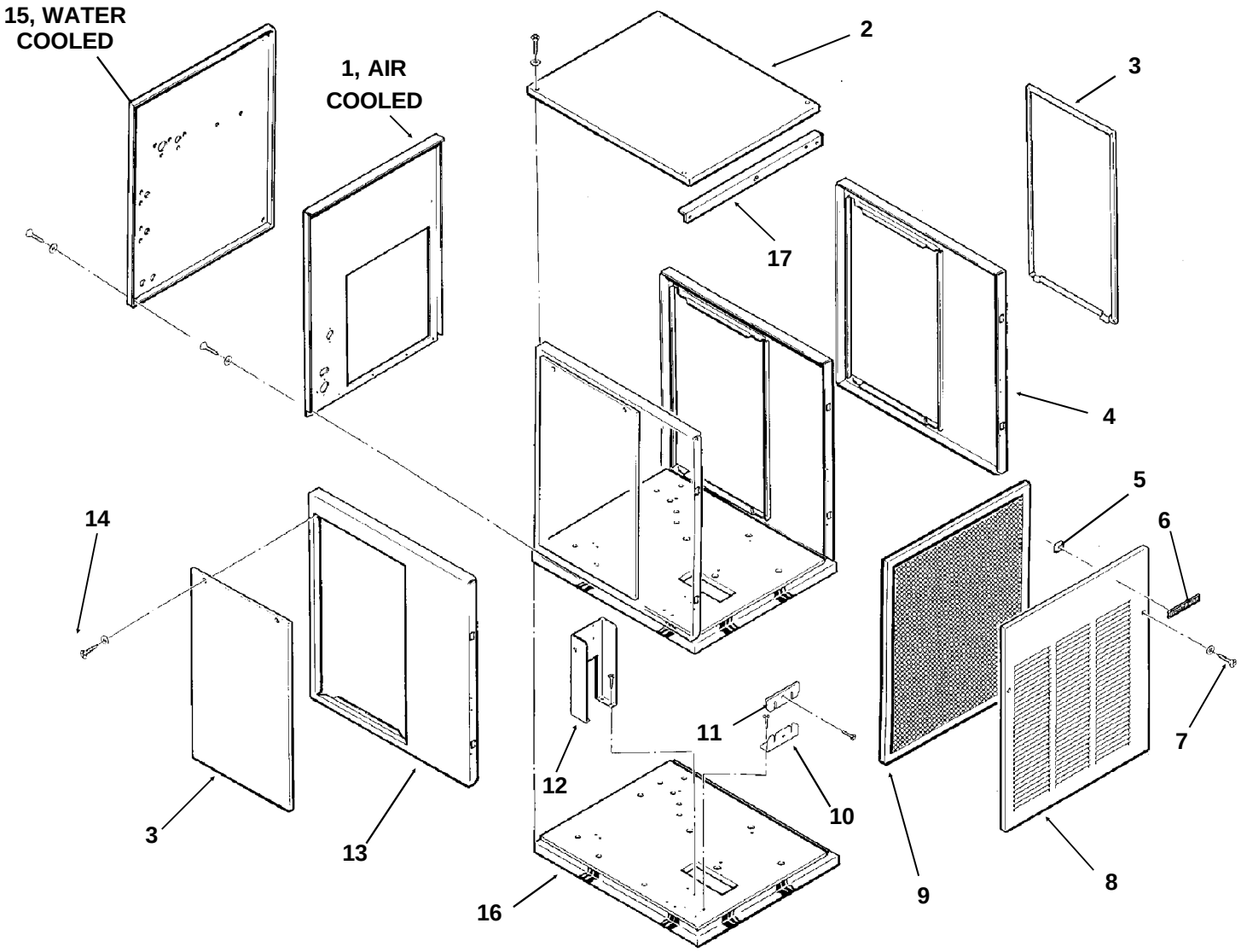

ITEM NUMBER	PART NUMBER	DESCRIPTION	ITEM NUMBER	PART NUMBER	DESCRIPTION
1	A34544-001	Back Panel, Air Cooled	9	02-2976-01	Filter Assembly
2	A33256-001	Top Panel, Painted	10	A31462-001	Tube Bracket
	A33256-002	Top Panel, S.S.	11	A31461-001	Tube Bracket
3	A34038-001	Service Panel, Painted	12	A34039-001	Control Box Support
	A34038-002	Service Panel, S.S.	13	A32435-001	Left Side Panel, Painted
4	A33292-001	Right Side Panel, Painted		A32435-002	Left Side Panel, S.S.
	A33292-002	Right Side Panel, S.S.	14	03-1404-12	Screw
5	03-0271-00	Speed Clip	15	A33252-001	Rear Panel,
6	15-0711-01	Emblem			Water Cooled
7	03-1419-08	Screw			Painted Only
8	A33255-001	Front Panel, Painted	16.	A34042-001	Base
	A33255-002	Front Panel, S.S.	17	A34348-001	Front Brace, Air Cooled

FM800 SERVICE PARTS
Air Cooled Refrigeration

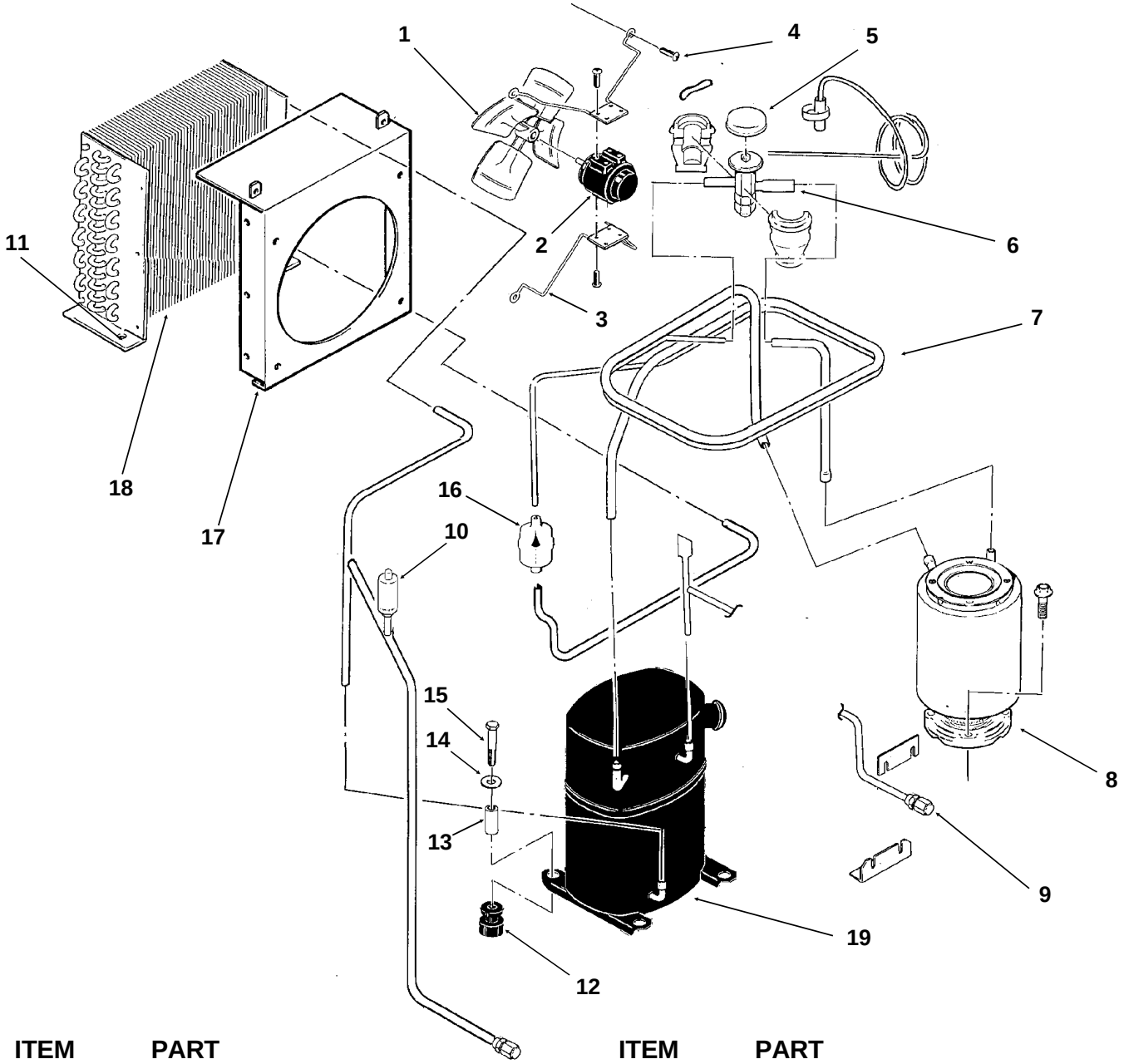

ITEM NUMBER	PART NUMBER	DESCRIPTION
1	18-3815-01	Fan Blade
2	12-1576-02	Fan Motor 208-230 v
	12-1576-01	Fan Motor 115 v
3	02-2378-01	Fan Bracket
4	03-1531-01	Screw
5	A32961-020	Insulation Kit (3 piece)
6	16-0780-01	Thermo Expansion Valve
7	A34536-001	Suction Line
8	A33194-020	Evaporator
9	16-0560-00	Valve Core
	16-0563-00	Valve Cap
10	11-0446-22	Hi Pressure Cut Out

ITEM NUMBER	PART NUMBER	DESCRIPTION
11	03-1645-01	Screw
12	18-2200-28	Grommet
13	18-2200-27	Sleeve
14	03-1407-07	Washer
15	03-1405-20	Cap Screw
16	02-2426-02	Dryer
17	A34618-001	Fan Shroud
	A34617-001	Fan shroud cover
18	18-7800-01	Condenser
19	18-6100-02	Compressor 208-230 v
	18-6100-51	Overload for 208-230 v
	18-6100-01	Compressor 115 v
	18-6100-50	Overload for 115 v

FM800 SERVICE PARTS
Water Cooled Refrigeration

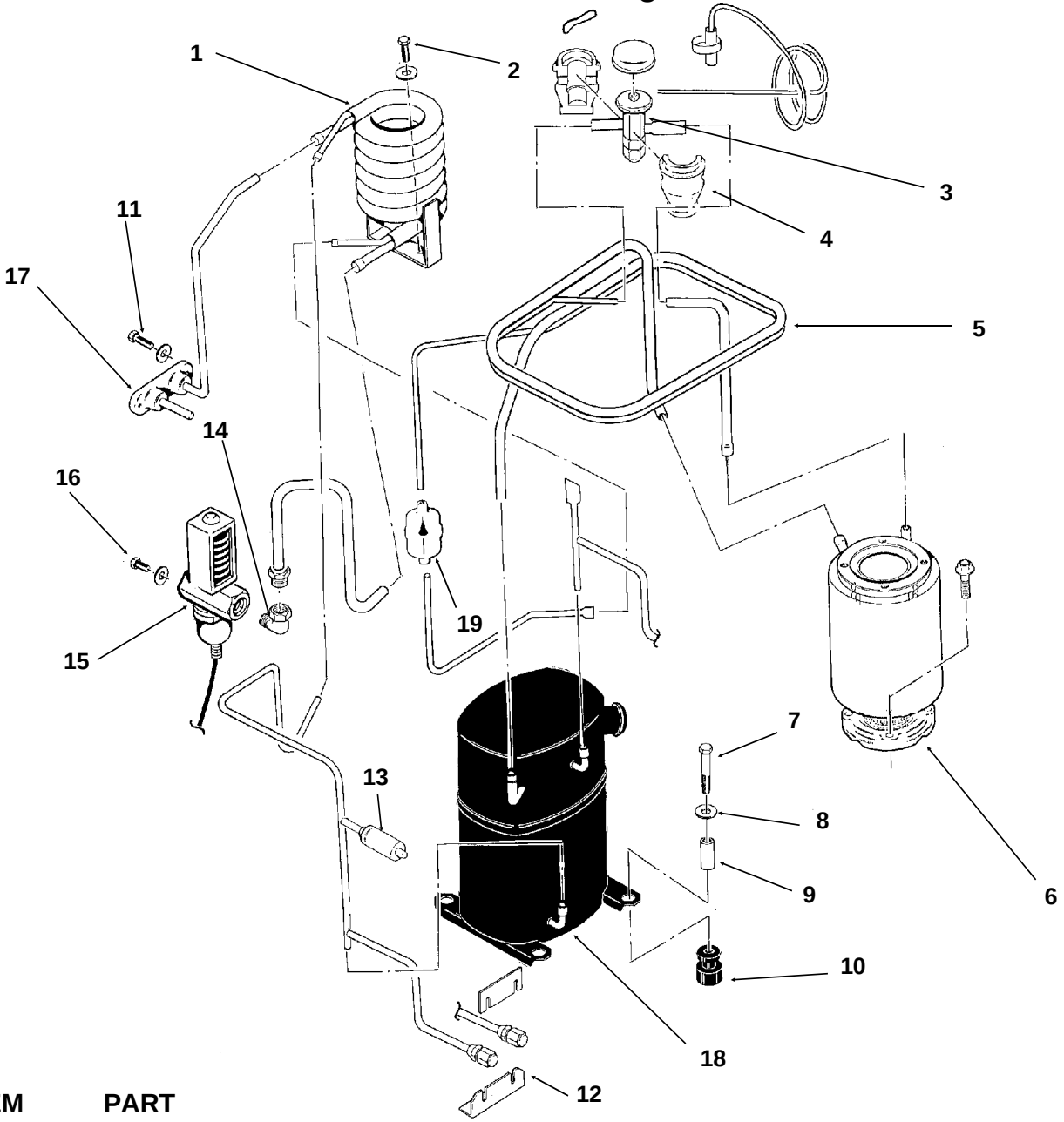

ITEM NUMBER	PART NUMBER	DESCRIPTION
1	18-3306-02	Condenser
2	03-1645-01	Screw
3	16-0780-01	Thermo Expansion Valve
4	A32961-020	Insulation Kit (3 piece)
5	A34536-001	Suction Line
6	A33194-020	Evaporator
7	03-1405-20	Cap Screw
8	03-1407-07	Washer
9	18-2200-27	Sleeve
10	18-2200-28	Grommmet
11	03-1645-01	Screw
12	16-0560-00	Valve Core
	16-0563-00	Valve Cap
13	11-0446-22	Hi Pressure Cut Out
14	16-0401-02	Elbow
15	11-0424-01	Water Reg. Valve
16	03-1403-14	Screw
17	A34543-001	Drain Assembly
18	18-6100-01	Compressor 115/60/1
	18-6100-50	Overload 115v
	18-6200-02	Compressor 208-230/60/1
	18-6100-51	Overload 208-220v
19	02-2426-02	Dryer

FM800 SERVICE PARTS
Water System

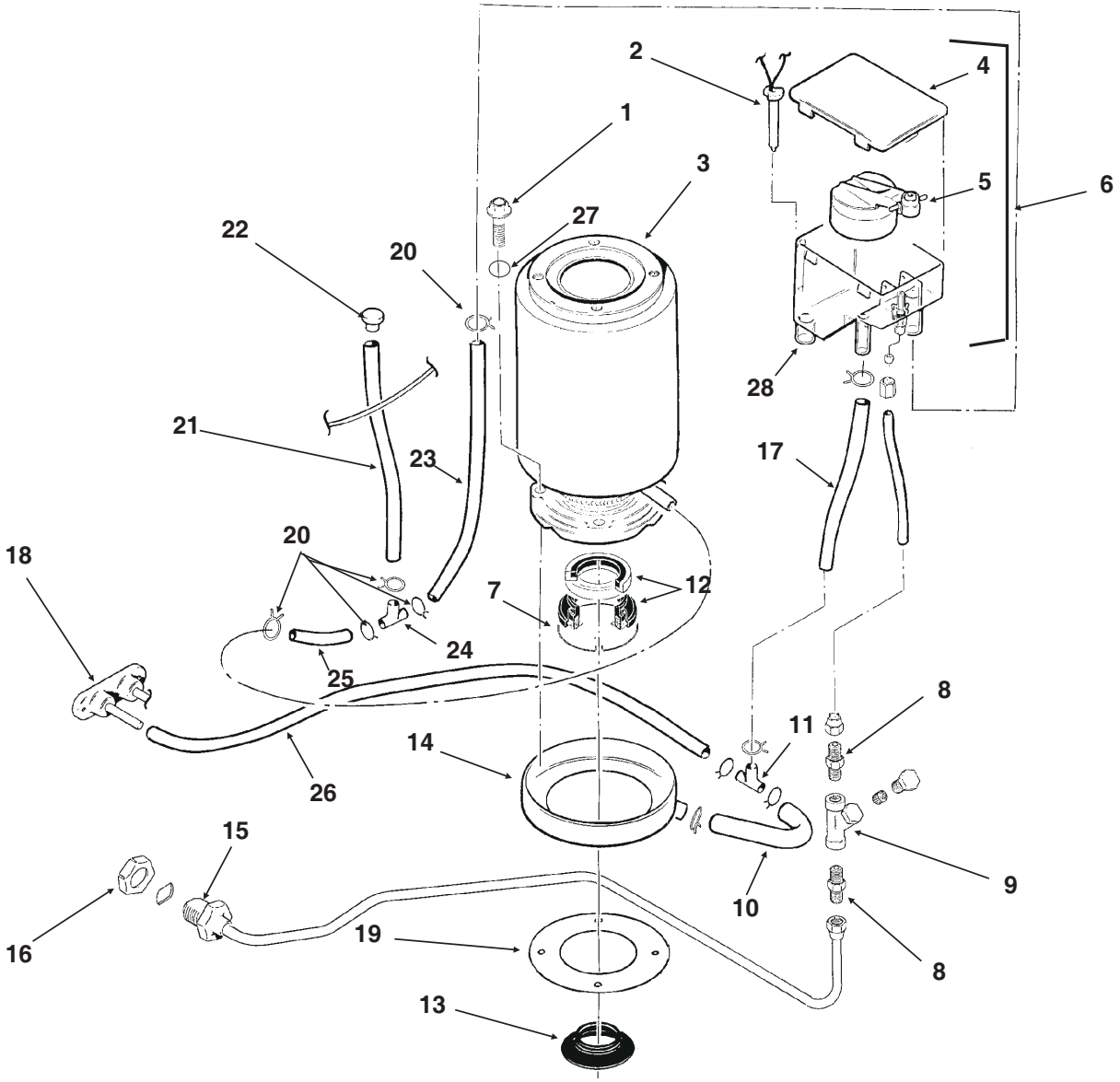

ITEM NUMBER	PART NUMBER	DESCRIPTION
1	03-1420-03	Cap Screw
2	A33101-021	Water Level Sensor
3	A33194-020	Evaporator
4	02-2936-01	Res. Cover
5	A32907-001	Float Assembly with pin housing seal, rubber seat, insert & float
	A32918-001	Rubber seat
6	A32929-020	Reservoir Assy Complete
7	A32777-001	Retaining Ring for seal
8	16-0791-01	Half Union
9	16-0162-00	Strainer
10	13-0079-03	Tube, 3.2" req.
11	16-0670-02	Tee
12	02-0929-02	Water Seal
13	13-0868-01	Water Shed

ITEM NUMBER	PART NUMBER	DESCRIPTION
14	A32050-001	Drip Pan
15	A27318-001	Water Inlet Fitting
16	03-1394-01	Pal Nut
17	13-0079-03	Res. Overflow, 8" req.
18	A32282-004	Drain Casting, air cooled
19	13-0704-00	Gasket
20	02-2814-08	Clamps
21	13-0674-06	Evap. Drain, 14" req.
22	A33205-001	Plug
23	13-0674-06	Evap. Inlet Tube, 5" req.
24	16-0670-01	Tee
25	A33203-001	Tube, Preformed
26	13-0079-03	Drain Tube, 24" req.
27.	03-1417-13	Lockwasher
28	13-0230-00	Rubber cap

FM800 SERVICE PARTS

Gearmotor

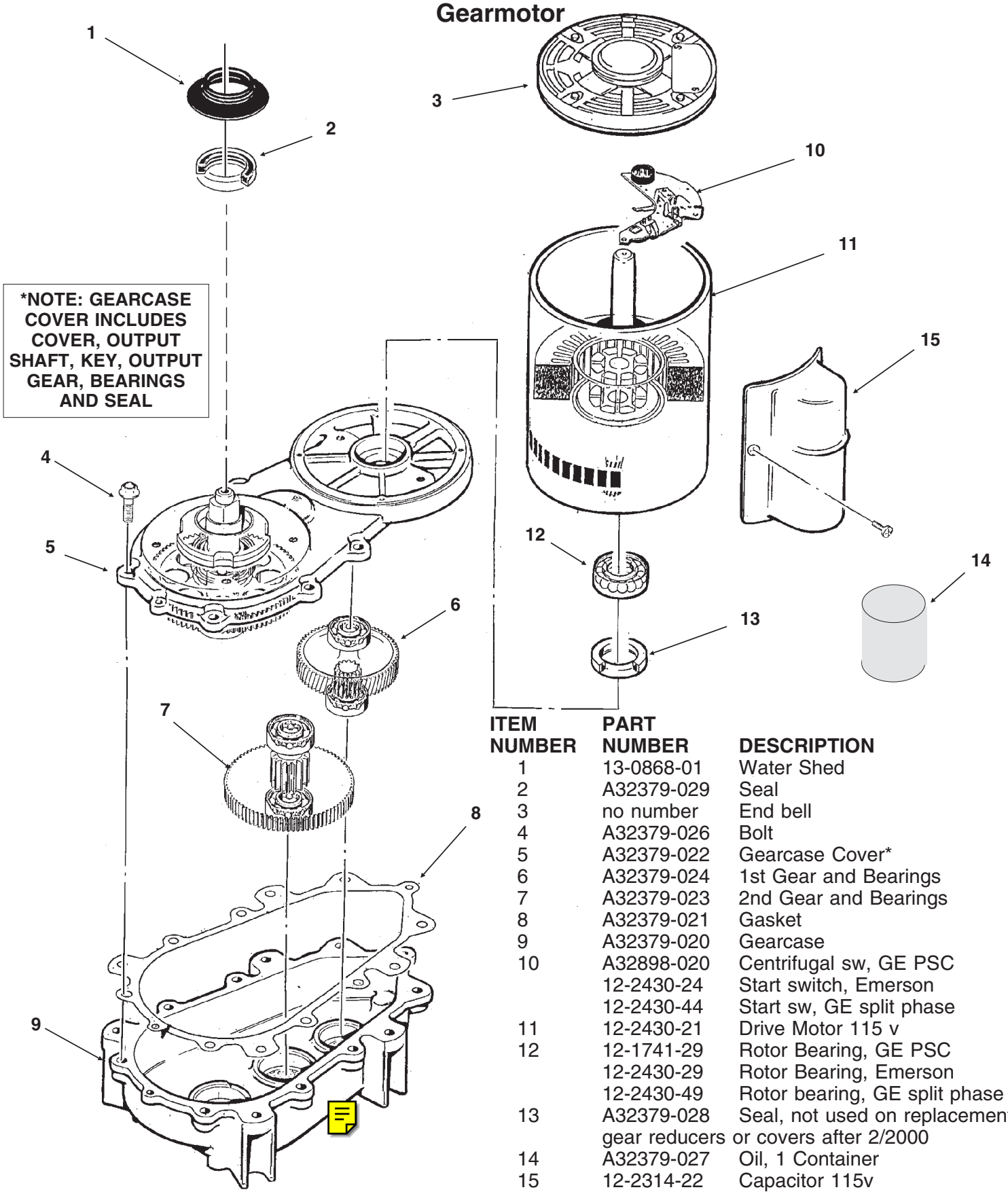

ITEM NUMBER	PART NUMBER	DESCRIPTION
1	13-0868-01	Water Shed
2	A32379-029	Seal
3	no number	End bell
4	A32379-026	Bolt
5	A32379-022	Gearcase Cover*
6	A32379-024	1st Gear and Bearings
7	A32379-023	2nd Gear and Bearings
8	A32379-021	Gasket
9	A32379-020	Gearcase
10	A32898-020	Centrifugal sw, GE PSC
	12-2430-24	Start switch, Emerson
	12-2430-44	Start sw, GE split phase
11	12-2430-21	Drive Motor 115 v
12	12-1741-29	Rotor Bearing, GE PSC
	12-2430-29	Rotor Bearing, Emerson
	12-2430-49	Rotor bearing, GE split phase
13	A32379-028	Seal, not used on replacement gear reducers or covers after 2/2000
14	A32379-027	Oil, 1 Container
15	12-2314-22	Capacitor 115v
16	A33220-021	Complete Assy 115 v
	A33220-030	Gears, oil & cases. No motor

FM800 SERVICE PARTS

Evaporator

Bail Clamp, pn A34969-001 use began Jan. 91.

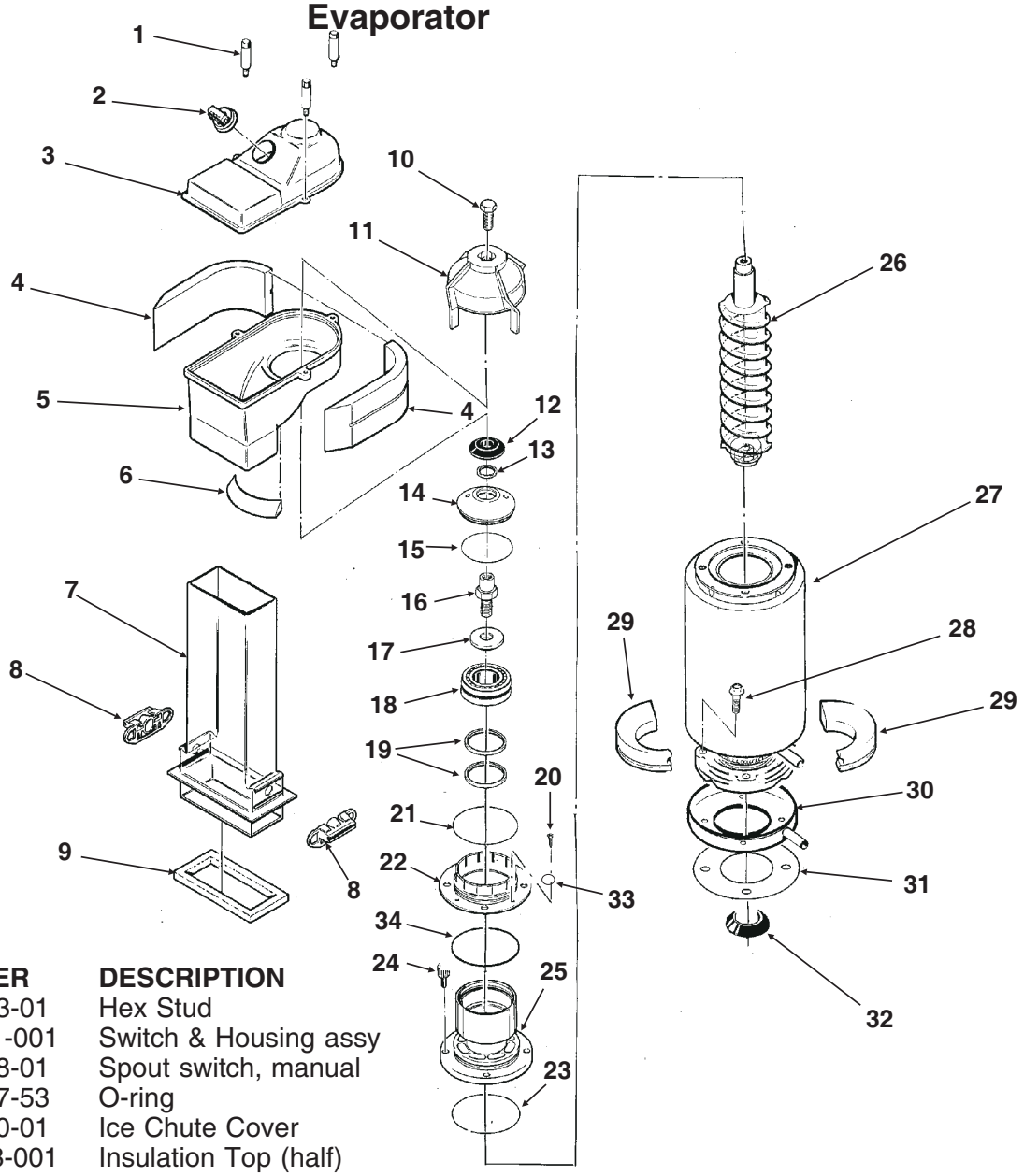

ITEM NUMBER	PART NUMBER	DESCRIPTION
1.	02-2933-01	Hex Stud
2.	A32891-001	Switch & Housing assy
	12-2398-01	Spout switch, manual
	13-0617-53	O-ring
3.	02-2930-01	Ice Chute Cover
4.	A32963-001	Insulation Top (half)
5.	02-2926-01	Ice Chute Body
6.	A33102-001	Insulation Collar Inside
	A35419-020	Strap kit
7.	02-2929-03	Ice Chute Lower
8.	A37708-021	Bin Controls Assy. (set)
9.	A32930-001	Chute Gasket
10.	03-1405-52	Hex Cap Screw
11.	02-3001-01	Ice Sweep
12.	13-0871-01	Water Shed
13.	02-2978-01	Lip Seal
14.	02-3128-01	Breaker Cover
15.	13-0617-54	O-Ring
16.	08-0660-01	Auger Stud
17.	no number	Thrust Washer part of #16
18.	A34559-020	Bearing
19.	02-2977-01	Lip Seal
20.	03-1403-27	Screw
21.	13-0617-52	O-Ring
22.	02-2916-01	Slotted Collar
23.	13-0617-45	O-Ring
24.	03-1544-08	Soc. Head Screw
25.	A34505-020	Breaker (Divider)
	(includes13,14,15,18 & 19)	
26.	A38071-021	Auger
27.	A33194-020	Evaporator
28.	03-1405-41	Cap Screw
29	A32902-001	Insulation Bot. (half)
	A32902-002	Insulation (half)
30	A37705-021	Drip Pan
31.	13-0704-00	Drip Pan Gasket
32.	13-0868-01	Water Shed
33.	03-1408-36	Washer
34	13-0617-49	O-Ring

FM800 SERVICE PARTS
Control Box

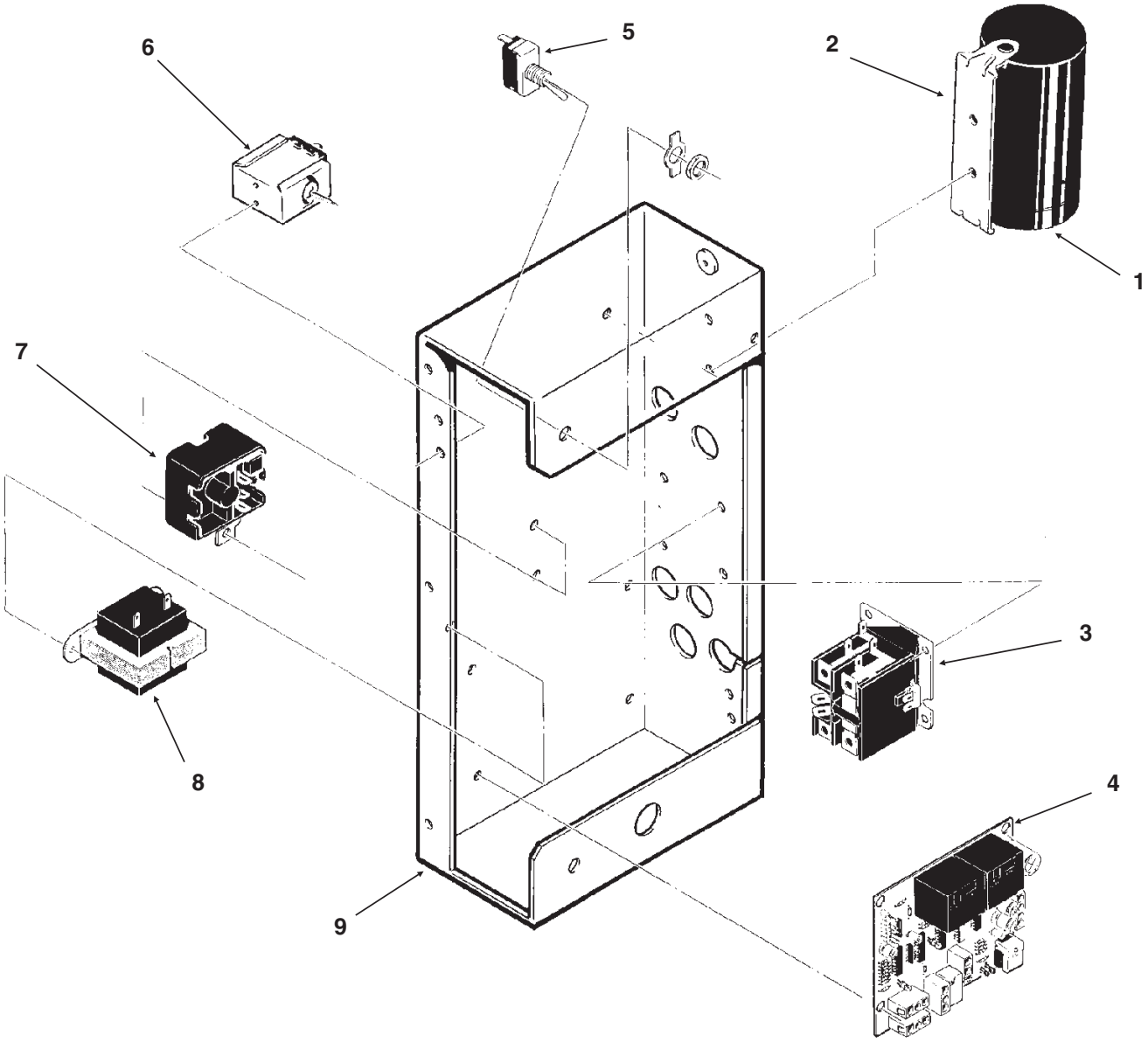

ITEM NUMBER	PART NUMBER	DESCRIPTION
1	18-1901-40	Start Cap 208-230 v
	18-1901-42	Start Capacitor 115 v
	18-2200-38	Start Capacitor Cap.
2.	18-2200-39	Start Capacitor Bracket
	03-1638-04	Screw
	03-1417-15	Lockwasher
3.	12-2469-02	Contactor 208-230 v
	12-2469-03	Contactor 115 v
4	A37750-021	Circuit Board
5.	12-0426-01	Master Switch
6.	11-0447-20	Low Pressure Control

ITEM NUMBER	PART NUMBER	DESCRIPTION
7	18-1903-33	Potential Relay 208-230 volt
	18-1903-44	Potential Relay 115 volt
8.	12-2285-21	Transformer 115v
	12-2285-22	Transformer 220v
9	no number	Control Box
NOT ILLUSTRATED		
10.	12-2337-02	3 Pin Plug Assy (Safety Circuit to Circuit Board)
11.	12-2340-01	4 Pin Plug Assy (Transformer to Circuit Board)
12.	A34055-001	Control Box Cover

FM800 SERVICE PARTS
Wiring Diagram

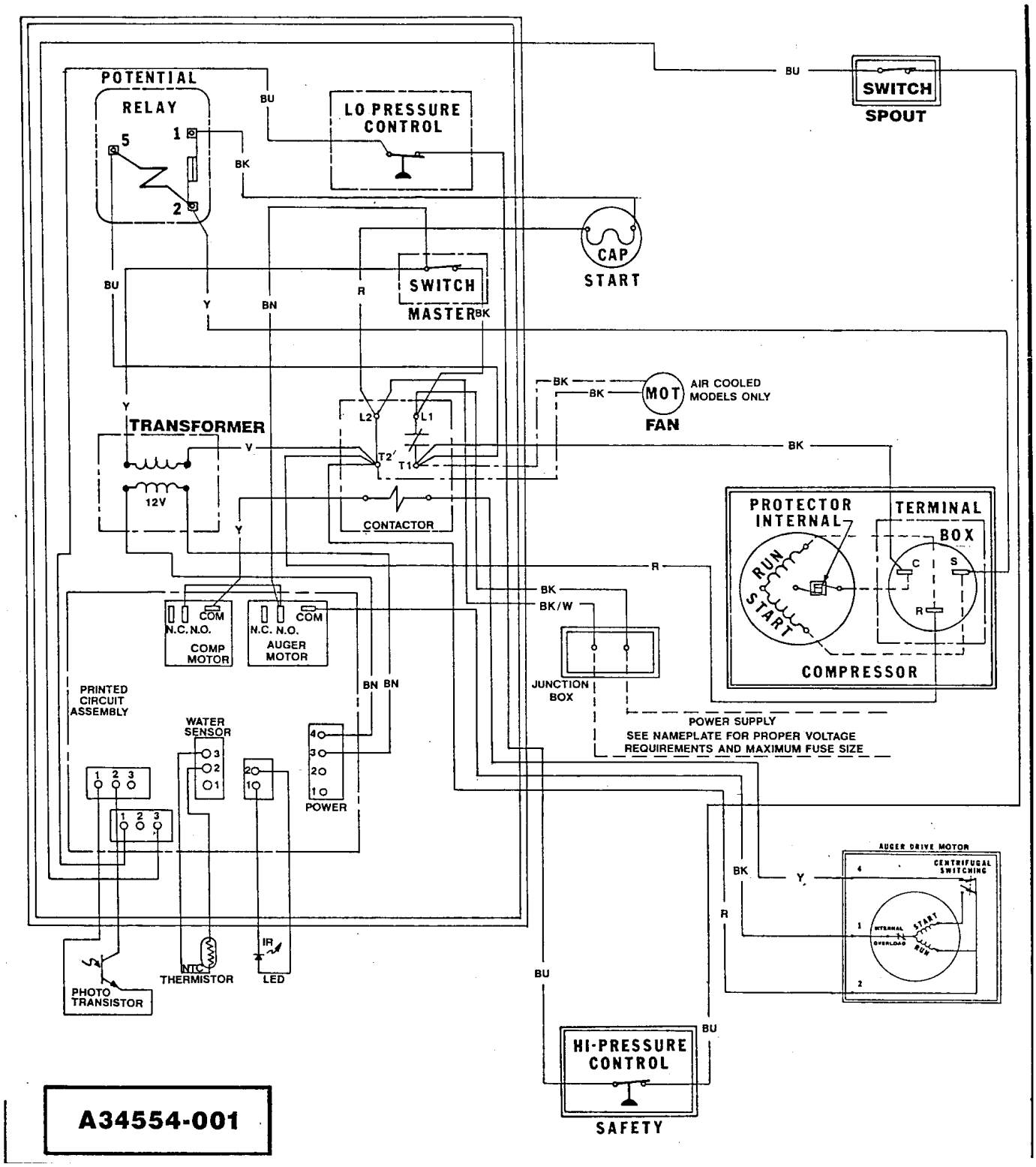

FM800 SERVICE PARTS
Schematic Diagram

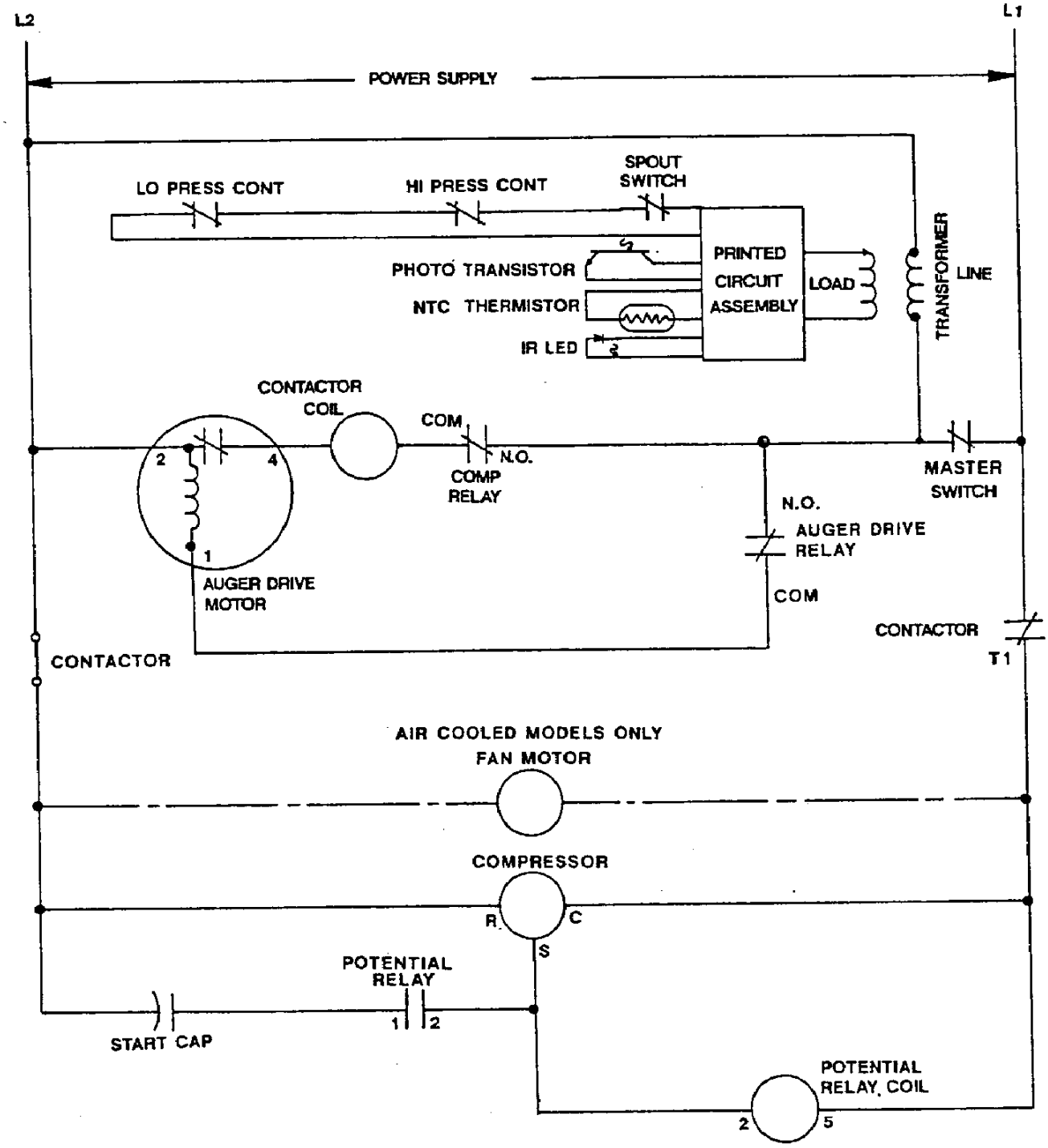

USE COPPER CONDUCTORS ONLY THIS UNIT MUST BE GROUNDED

All Controls Shown in Normal Ice Making Mode.

Note: Dashed lines indicate field wiring which must be installed in accordance with the National Electric Code Using a Minimum of 14 ga. awg. wire.