FM800R SERVICE PARTS

This parts list contains the service parts and wiring diagrams for this model. Check the model number in question to be sure that it is applicable to this parts list.
Caution: This model ice maker has been manufactured in two voltages, for electrical components, check to be certain that the part is the correct voltage for the machine.

TABLE OF CONTENTS

Cabinet 2

Refrigeration 3

Water 4

Gearmotor 5

Evaporator 6

Control Box 7

Remote Condenser 8

Wiring Diagrams 9

FM800R SERVICE PARTS

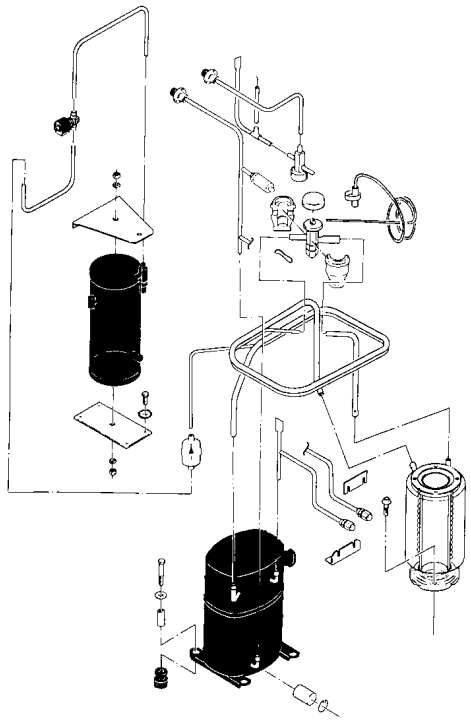

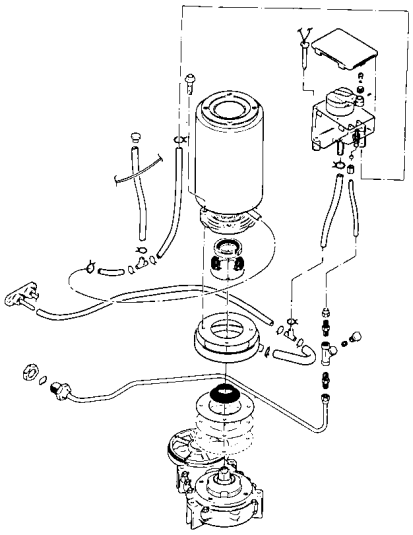

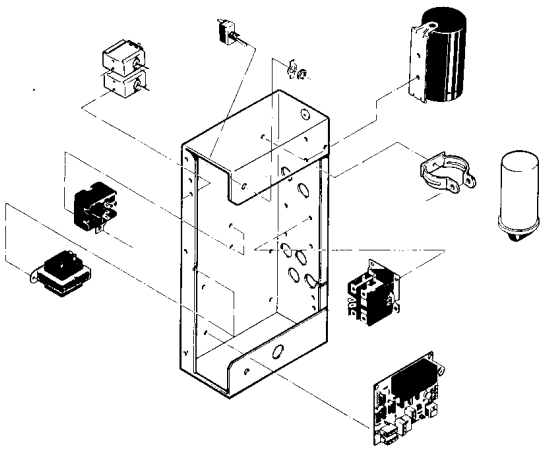

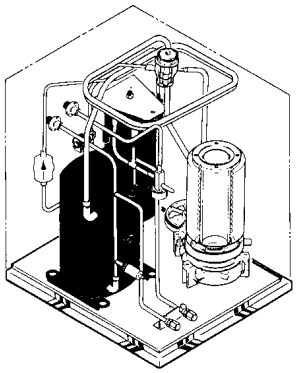

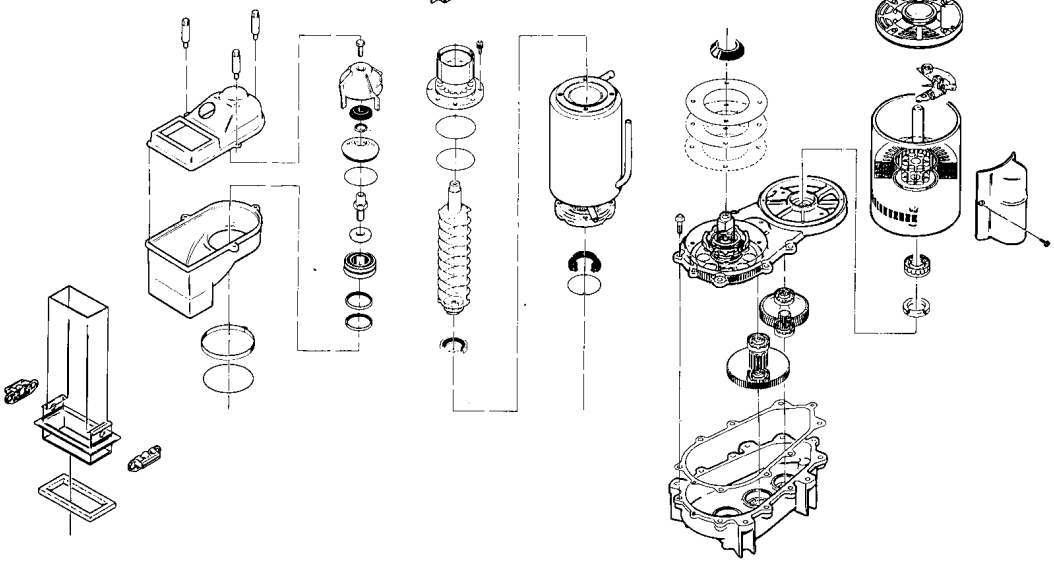

FM800R SERVICE PARTS
Cabinet Assembly

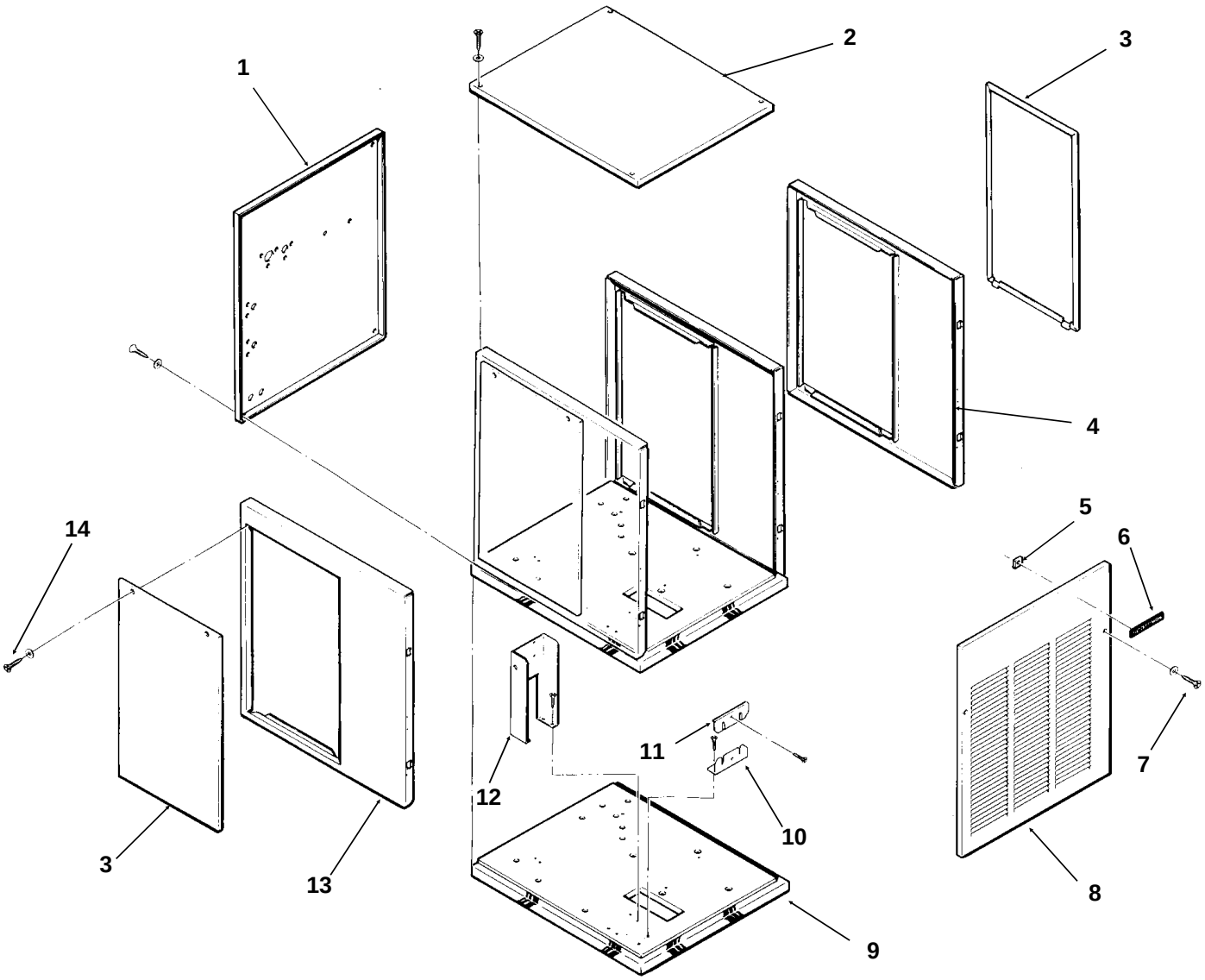

ITEM NUMBER	PART NUMBER	DESCRIPTION	ITEM NUMBER	PART NUMBER	DESCRIPTION
1	A33252-001	Back Panel, Painted	8	A33255-001	Front Panel, Painted
2	A33256-001	Top Panel, Painted		A33255-002	Front Panel, S.S.
	A33256-002	Top Panel, S.S.	9	A34042-001	Base Assembly
3	A34038-001	Service Panel, Painted	10	A31462-001	Tube Bracket
	A34038-002	Service Panel, S.S.	11	A31461-001	Tube Bracket
4	A33292-001	Right Side Panel, Painted	12	A34039-001	Control Box Support
	A33292-002	Right Side Panel, S.S.	13	A32435-001	Left Side Panel, Painted
5	03-0271-00	Speed Clip		A32435-002	Left Side Panel, S.S.
6	15-0711-01	Emblem	14	03-1404-12	Screw
7	03-1419-08	Screw			

FM800R SERVICE PARTS
Refrigeration System

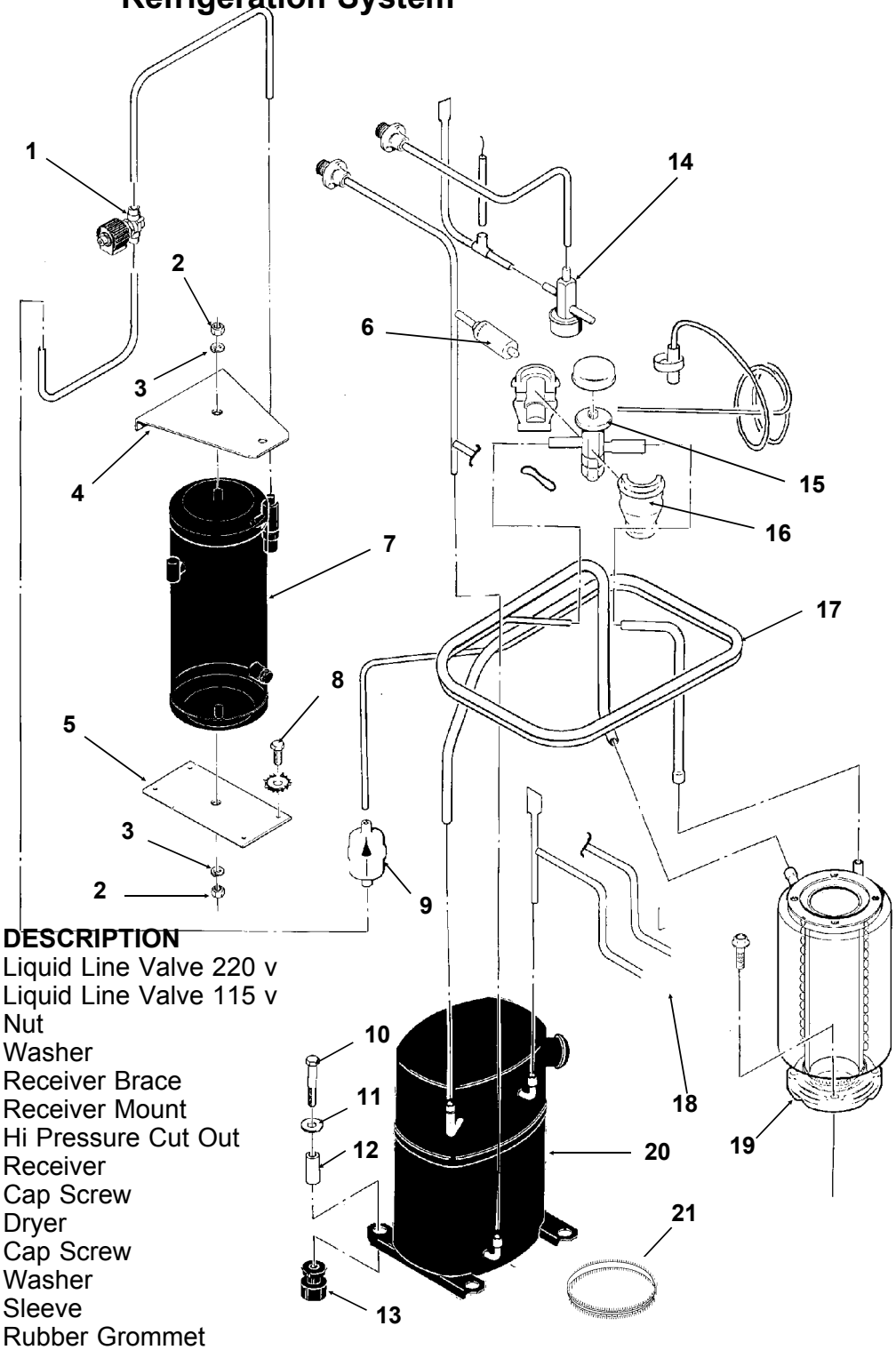

ITEM NUMBER	PART NUMBER	DESCRIPTION
1	12-2257-21	Liquid Line Valve 220 v
	12-2257-22	Liquid Line Valve 115 v
2	03-1406-13	Nut
3	03-1410-06	Washer
4	A32968-001	Receiver Brace
5	A31801-002	Receiver Mount
6	11-0446-23	Hi Pressure Cut Out
7	16-0761-01	Receiver
8	03-1645-01	Cap Screw
9	02-2426-02	Dryer
10	03-1405-20	Cap Screw
11	03-1407-07	Washer
12	18-2200-27	Sleeve
13	18-2200-28	Rubber Grommet
14	11-0422-22	Head Pressure Valve
15	16-0780-21	Thermo Expansion Valve
16	A32961-020	Insulation Kit for TXV
17	A34536-001	Suction Line
18	16-0560-00	Core
	16-0563-00	Nut
19	A33194-020	Evaporator
20	18-6100-02	Compressor 208-230 v
	18-6100-51	Overload 208-230 v
	18-6100-01	Compressor 115/60/1
	18-6100-50	Overload 115/60/1
21	12-1868-03	Crankcase Htr 208-230 v
	12-1868-04	Crankcase Htr 115 v

FM800R SERVICE PARTS
Water System, Water Seal

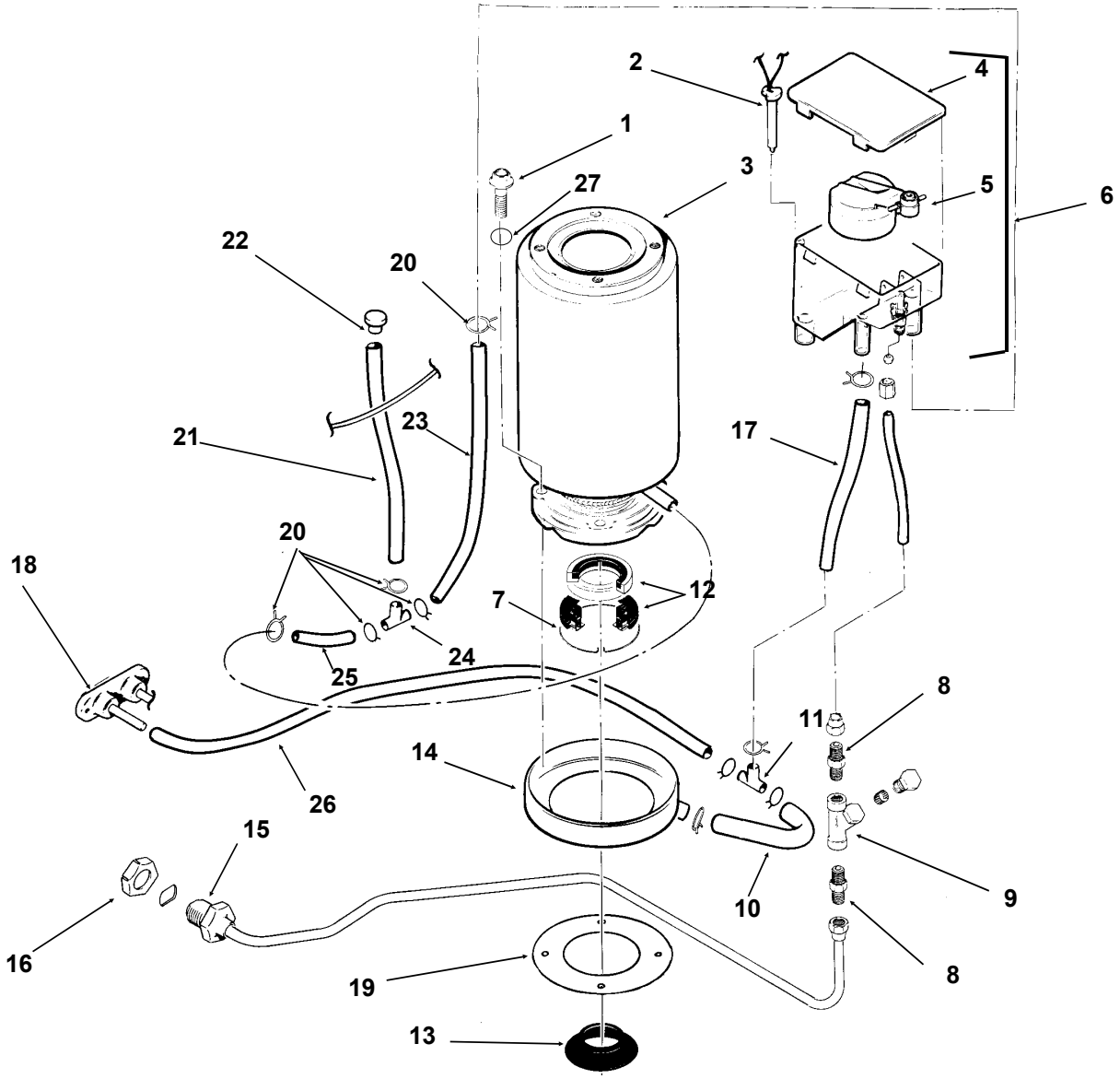

ITEM NUMBER	PART NUMBER	DESCRIPTION
1	03-1420-03	Cap Screw
2	A33101-022	Water Level Sensor
3	A33194-020	Evaporator
4	02-2936-01	Res. Cover
5	A32907-001	Float Assembly with pin, housing seal, rubber seal, insert & float
6	A32929-020	Reservoir Assembly
7	A32777-001	Retaining Ring for Seal
8	16-0791-01	Half Union
9	16-0162-00	Strainer
10	13-0079-03	Tube, 3.2" req.
11	16-0670-02	Tee
12	02-0929-02	Water Seal
13	13-0868-01	Water Shed
14	A32050-001	Drip Pan
15	A27318-001	Water Inlet Fitting
16	03-1394-01	Pal Nut
17	13-0079-03	Res. Overflow, 8" req.
18	A34045-001	Drain Casting
19	13-0704-00	Gasket
20	02-2814-08	Clamps
21	13-0674-06	Evap. Drain, 14" req.
22	13-0840-01	Plug
23	13-0674-06	Evap. Inlet Tube, 13" req.
24	16-0670-01	Tee
25	A33203-001	Tube, Preformed
26	13-0079-03	Drain Tube, 24" req.
27.	03-1417-13	Lockwasher

FM800R SERVICE PARTS

Gearmotor

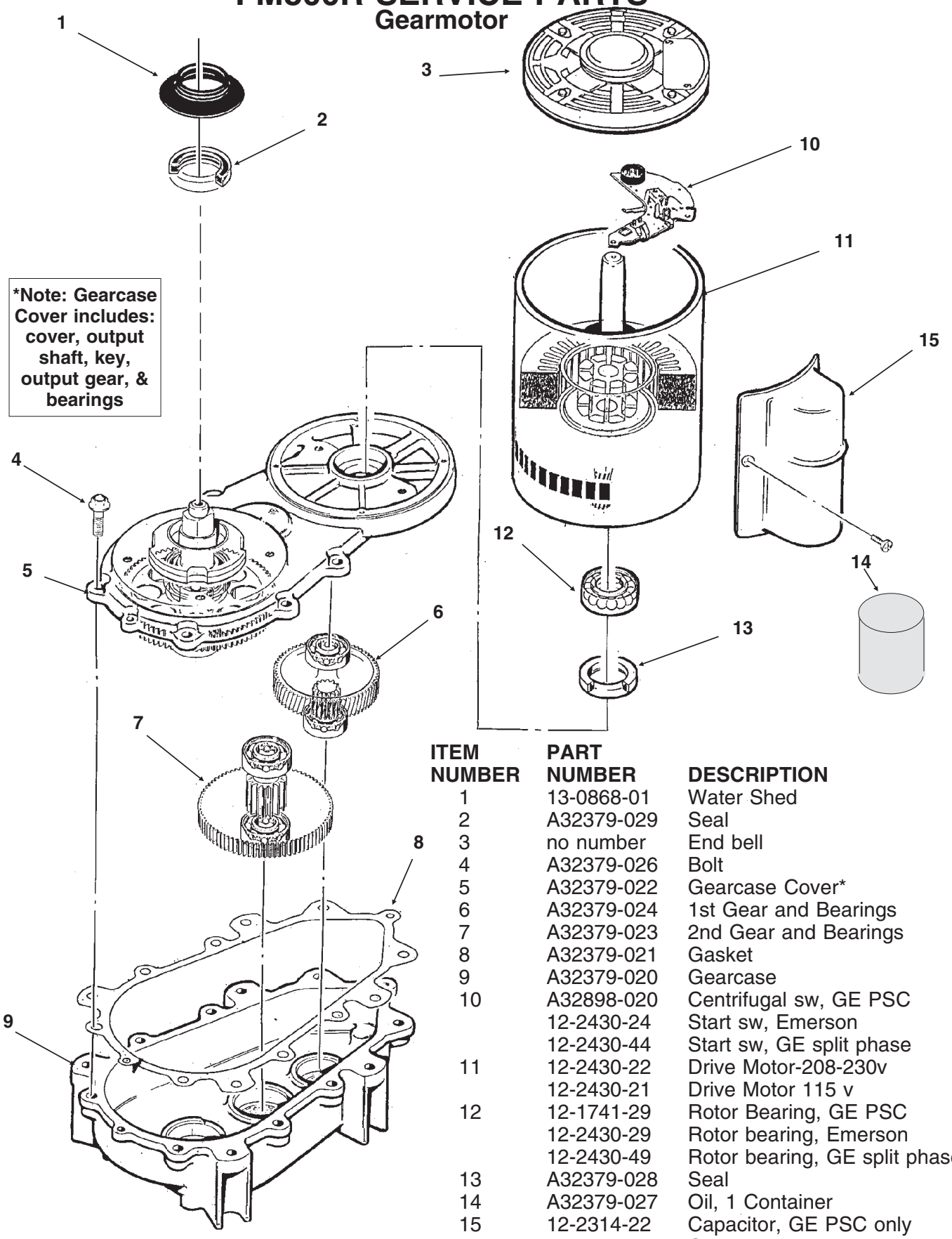

ITEM NUMBER	PART NUMBER	DESCRIPTION
1	13-0868-01	Water Shed
2	A32379-029	Seal
3	no number	End bell
4	A32379-026	Bolt
5	A32379-022	Gearcase Cover*
6	A32379-024	1st Gear and Bearings
7	A32379-023	2nd Gear and Bearings
8	A32379-021	Gasket
9	A32379-020	Gearcase
10	A32898-020	Centrifugal sw, GE PSC
	12-2430-24	Start sw, Emerson
	12-2430-44	Start sw, GE split phase
11	12-2430-22	Drive Motor-208-230v
	12-2430-21	Drive Motor 115 v
12	12-1741-29	Rotor Bearing, GE PSC
	12-2430-29	Rotor bearing, Emerson
	12-2430-49	Rotor bearing, GE split phase
13	A32379-028	Seal
14	A32379-027	Oil, 1 Container
15	12-2314-22	Capacitor, GE PSC only
16	A33220-022	Complete Assy 208-230v
	A33220-021	Complete Assembly 115 v
	A33220-030	Gears, oil & cases. No motor.

FM800R SERVICE PARTS
Evaporator, Bin Controls

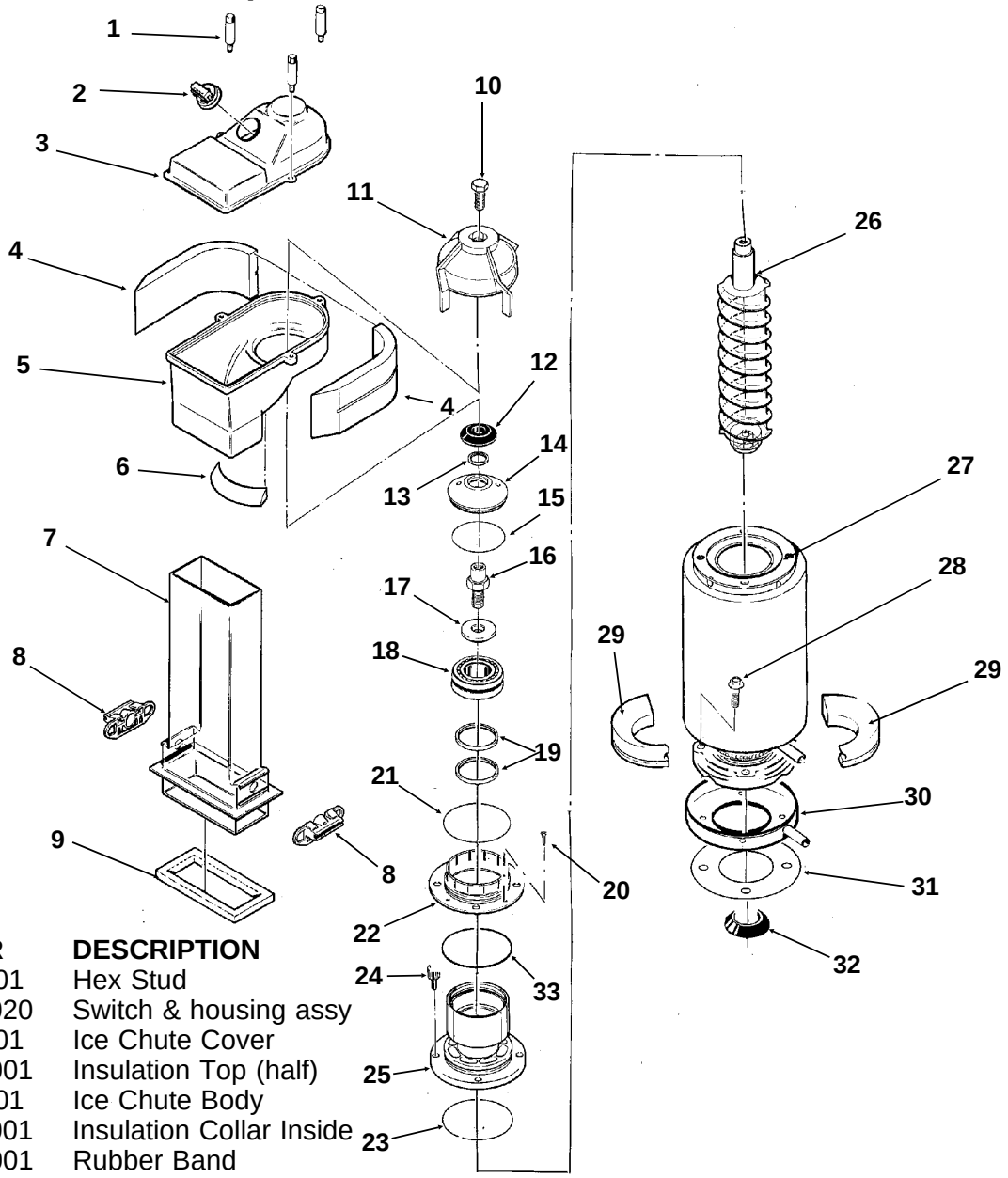

ITEM NUMBER	PART NUMBER	DESCRIPTION
1.	02-2933-01	Hex Stud
2.	A32891-020	Switch & housing assy
3.	02-2930-01	Ice Chute Cover
4.	A32963-001	Insulation Top (half)
5.	02-2926-01	Ice Chute Body
6.	A33102-001	Insulation Collar Inside
	A33210-001	Rubber Band
7.	02-2929-02	Ice Chute Lower
8.	A37708-021	Bin Controls Assy. (set)
9.	A32930-001	Chute Gasket
10.	03-1405-52	Hex Cap Screw
11.	02-3001-01	Ice Sweep
12.	13-0871-01	Water Shed
13.	02-2978-01	Lip Seal
14.	02-3128-20	Breaker Cover
15.	13-0617-54	O-Ring
16.	08-0660-01	Auger Stud & washer
17.	part of 16	Thrust Washer
18.	A34559-020	Bearing
19.	02-2977-01	Lip Seal
20.	03-1403-27	Screw
21.	13-0617-52	O-Ring
22.	02-2916-01	Slotted Collar
23.	13-0617-45	O-Ring
24.	03-1544-08	Soc. Head Screw
25.	A34505-020	Breaker (Divider) (includes 18 & 19)
26.	A38071-021	Auger
27.	A33194-020	Evaporator
28.	03-1405-41	Cap Screw
29.	A32962-001	Insulation Bot. (half)
	A32962-002	Insulation (half)
30.	A32050-001	Drip Pan
31.	13-0704-00	Drip Pan Gasket
32.	13-0868-01	Water Shed
33	13-0617-49	O-ring

FM800R SERVICE PARTS
Control Box

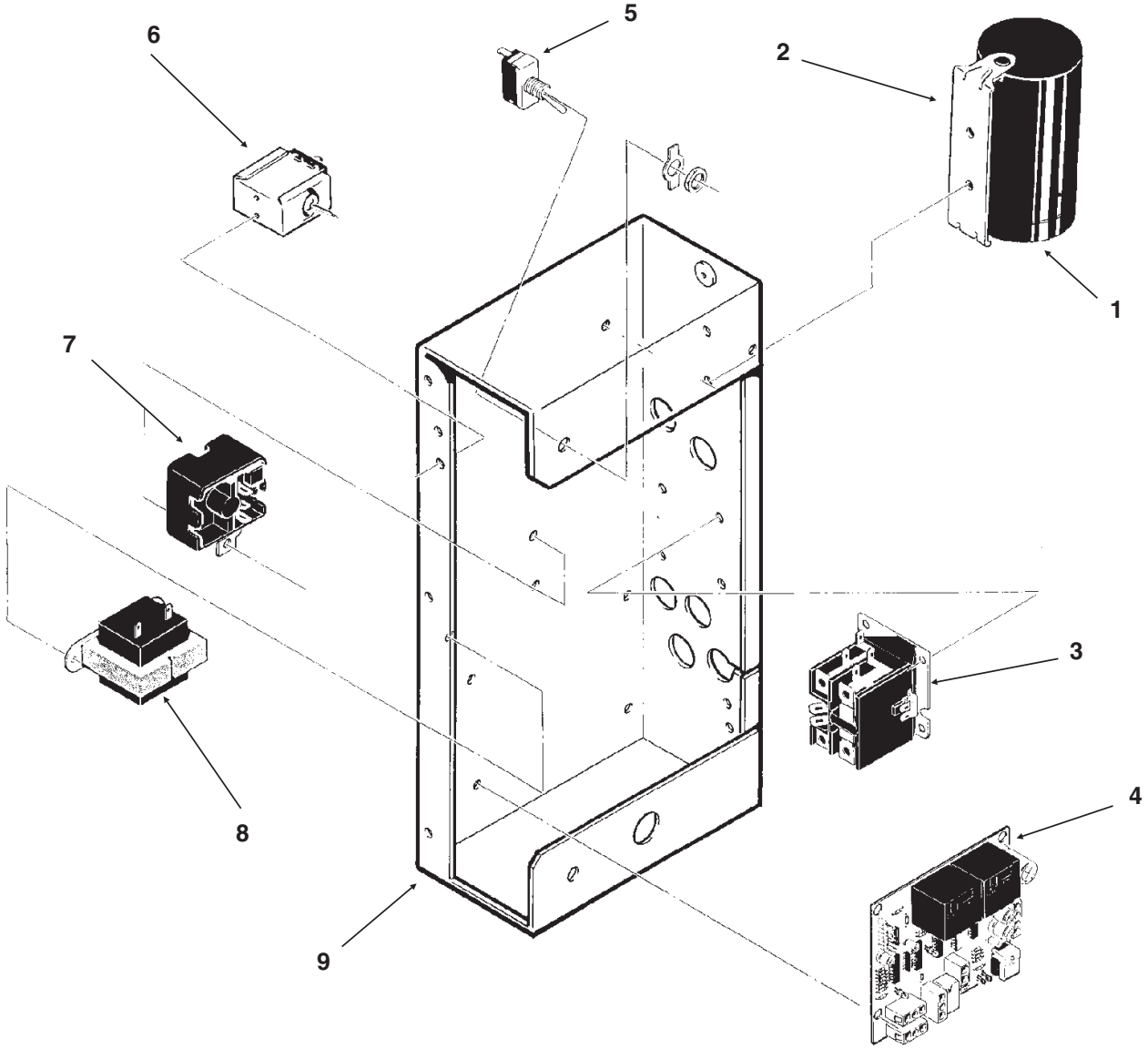

ITEM NUMBER	PART NUMBER	DESCRIPTION
1	18-1901-40	Start Cap 208-230 v
	18-1901-42	Start Capacitor 115 v
	18-2200-38	Start Capacitor Cap.
2.	18-2200-39	Start Capacitor Bracket
	03-1638-04	Screw
	03-1417-15	Lockwasher
3.	12-2469-02	Contactor 208-230 v
	12-2469-03	Contactor 115 v
4	A37750-021	Circuit Board
5.	12-0426-01	Master Switch
6.	11-0420-23	Low Pressure Control

ITEM NUMBER	PART NUMBER	DESCRIPTION
7	18-1903-33	Potential Relay 208-230 volt
	18-1903-44	Potential Relay 115 volt
8	12-2285-21	Transformer 115v
	12-2285-22	Transformer 220v
9	no number	Control Box Assy
NOT ILLUSTRATED		
10.	12-2337-02	3 Pin Plug Assy (Safety Circuit to Circuit Board)
11.	12-2340-01	4 Pin Plug Assy

FM800R SERVICE PARTS
REMOTE CONDENSER

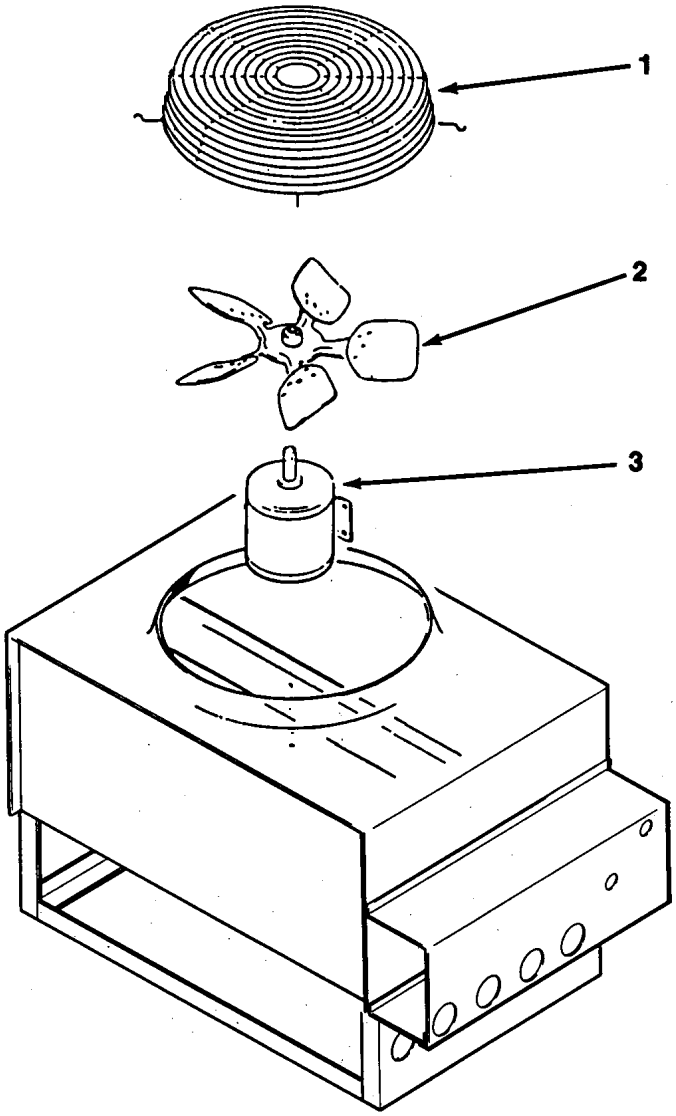

RC1051-32A or RC1052-32A

ITEM NUMBER	PART NUMBER	DESCRIPTION
1.	02-2628-01	Fan Guard
2.	18-3733-01	Fan Blade
3.	18-6305-01	Fan Motor

RC551-1

ITEM NUMBER	PART NUMBER	DESCRIPTION
1.	02-2618-01	Fan Guard
2.	18-3733-01	Fan Blade
3.	18-6305-01	Fan Motor

FM800R SERVICE PARTS
Component Layout Diagram

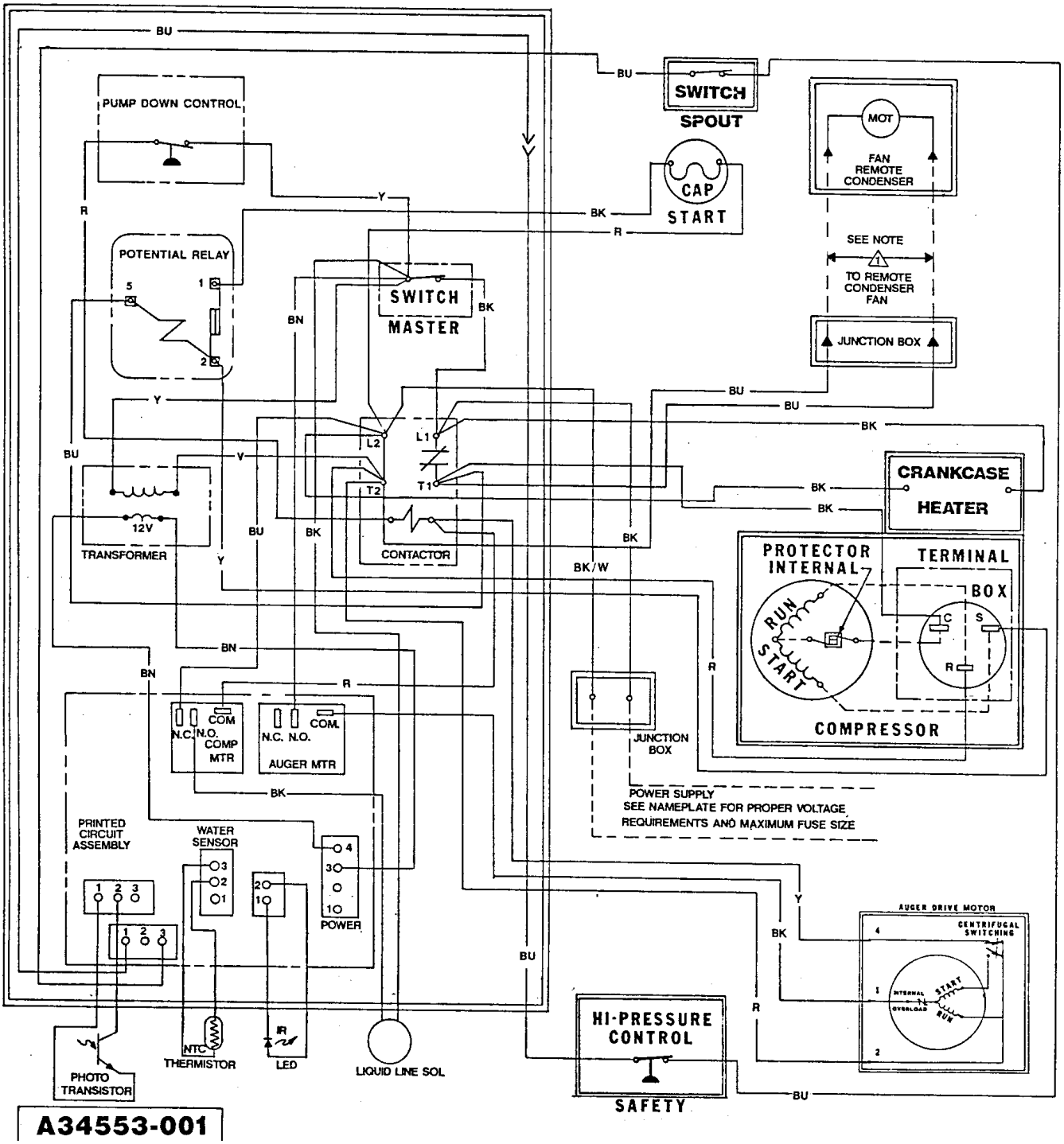

FM800R SERVICE PARTS
Schematic Diagram

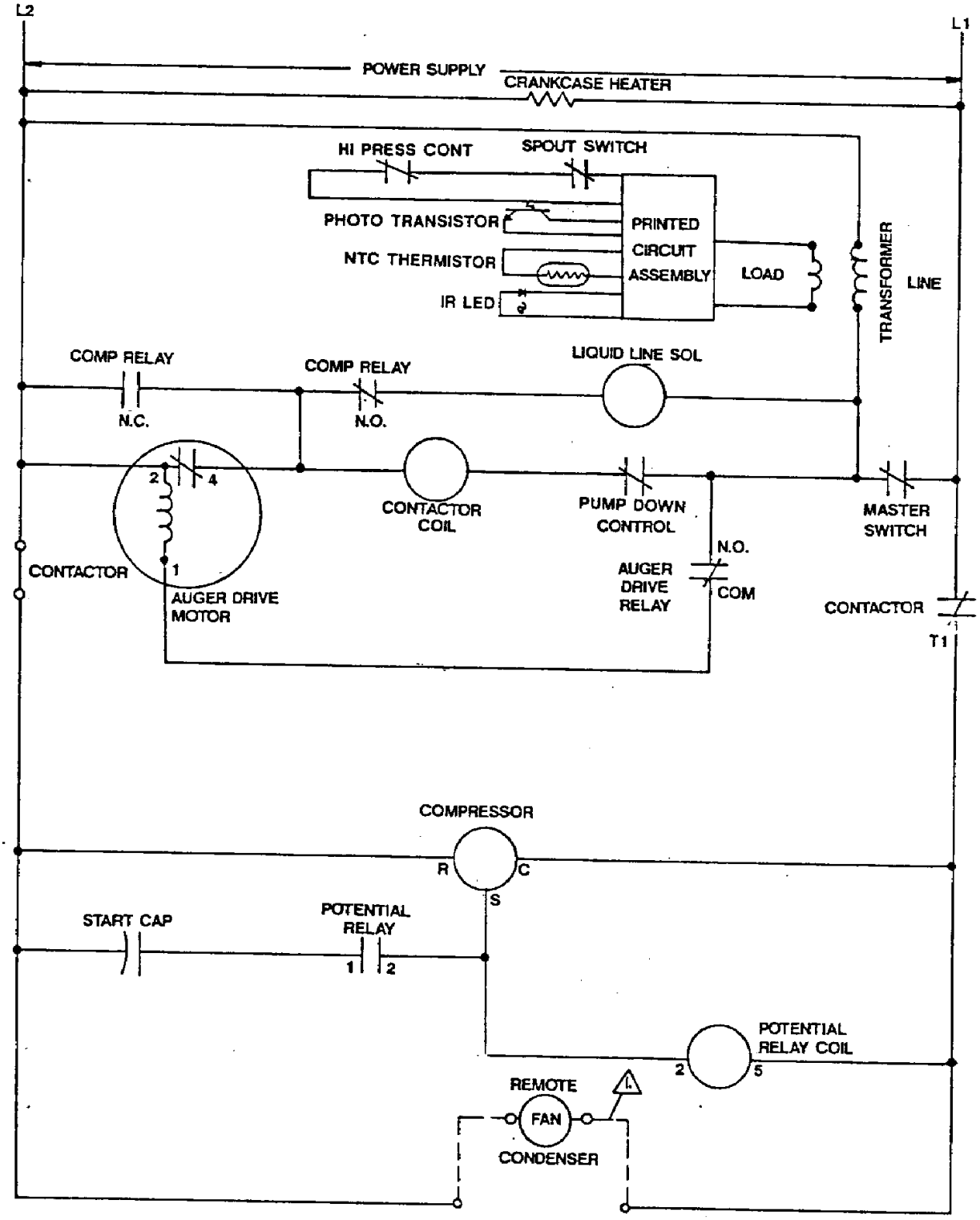

USE COPPER CONDUCTORS ONLY THIS UNIT MUST BE GROUNDED

All Controls Shown in Normal Ice Making Mode.

Note: Dashed lines indicate field wiring which must be installed in accordance with the National Electric Code Using a Minimum of 14 ga. awg. wire.