# FM1202R SERVICE PARTS

This parts list contains the service parts and wiring diagrams for this model. Check the model number in question to be sure that it is applicable to this parts list.

## TABLE OF CONTENTS


Cabinet ..... 2

Refrigeration ..... 3

Water ..... 4

Gearmotor ..... 5

Evaporator ..... 6

Control Box ..... 7

Remote Condenser ..... 8

Wiring Diagrams ..... 9

# FM1202R SERVICE PARTS

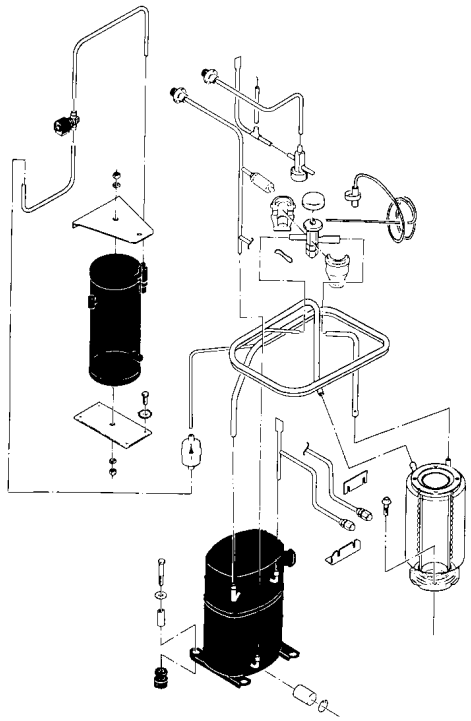

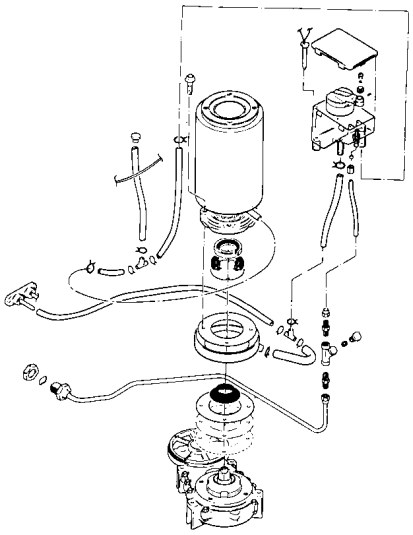

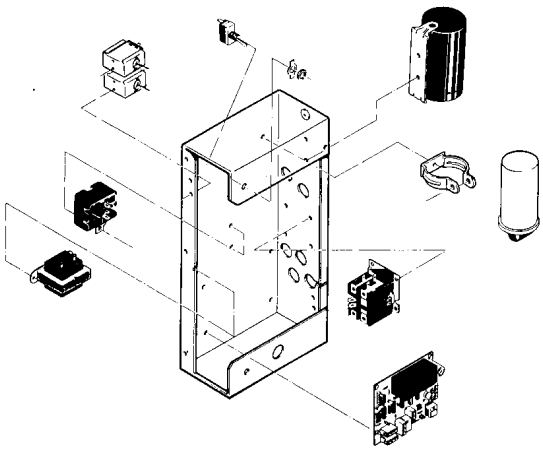

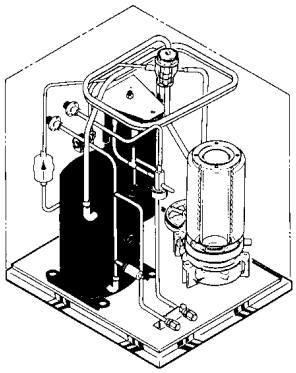

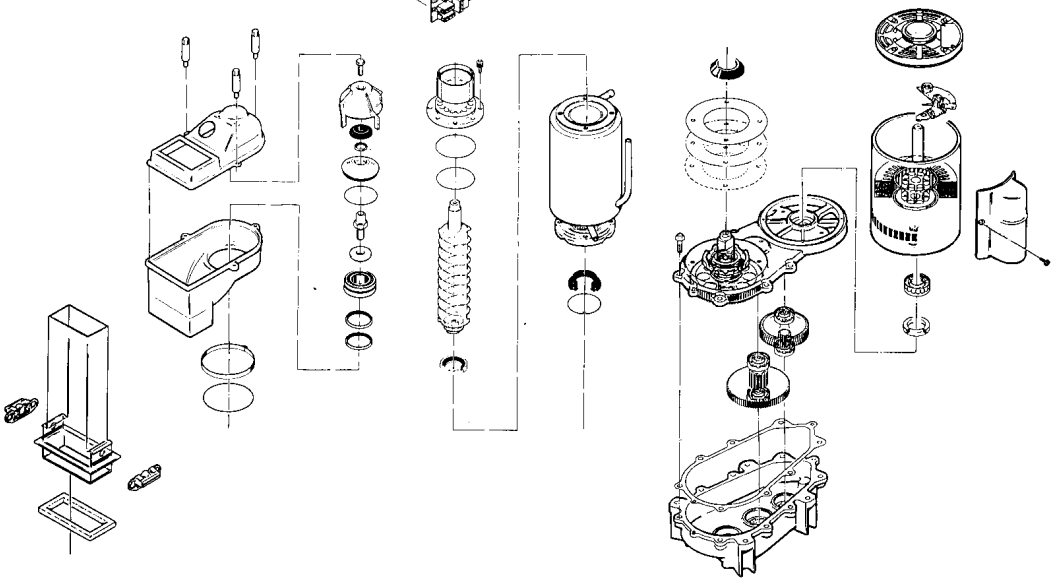

# FM1202R SERVICE PARTS
## Cabinet Assembly

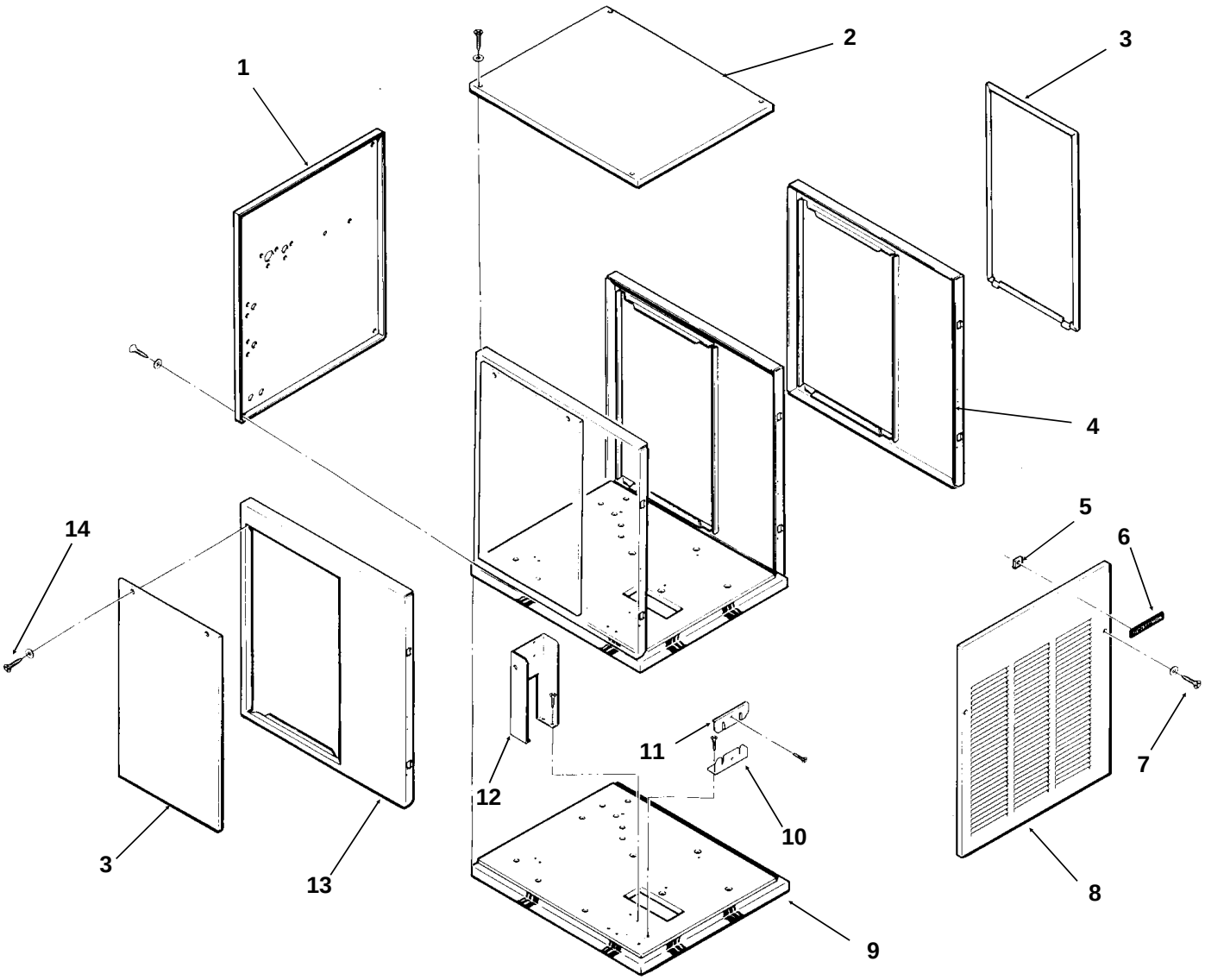


| ITEM NUMBER | PART NUMBER | DESCRIPTION | ITEM NUMBER | PART NUMBER | DESCRIPTION |
|---|---|---|---|---|---|
| 1 | A33252-001 | Back Panel, Painted | 8 | A33255-001 | Front Panel, Painted |
| 2 | A33256-001 | Top Panel, Painted | | A33255-002 | Front Panel, S.S. |
| | A33256-002 | Top Panel, S.S. | 9 | A34042-001 | Base Assembly |
| 3 | A34038-001 | Service Panel, Painted | 10 | A31462-001 | Tube Bracket |
| | A34038-002 | Service Panel, S.S. | 11 | A31461-001 | Tube Bracket |
| 4 | A33292-001 | Right Side Panel, Painted | 12 | A34039-001 | Control Box Support |
| | A33292-002 | Right Side Panel, S.S. | 13 | A32435-001 | Left Side Panel, Painted |
| 5 | 03-0271-00 | Speed Clip | | A32435-002 | Left Side Panel, S.S. |
| 6 | 15-0711-01 | Emblem | 14 | 03-1404-12 | Screw |
| 7 | 03-1419-08 | Screw | | | |

# FM1202R SERVICE PARTS
## Refrigeration System

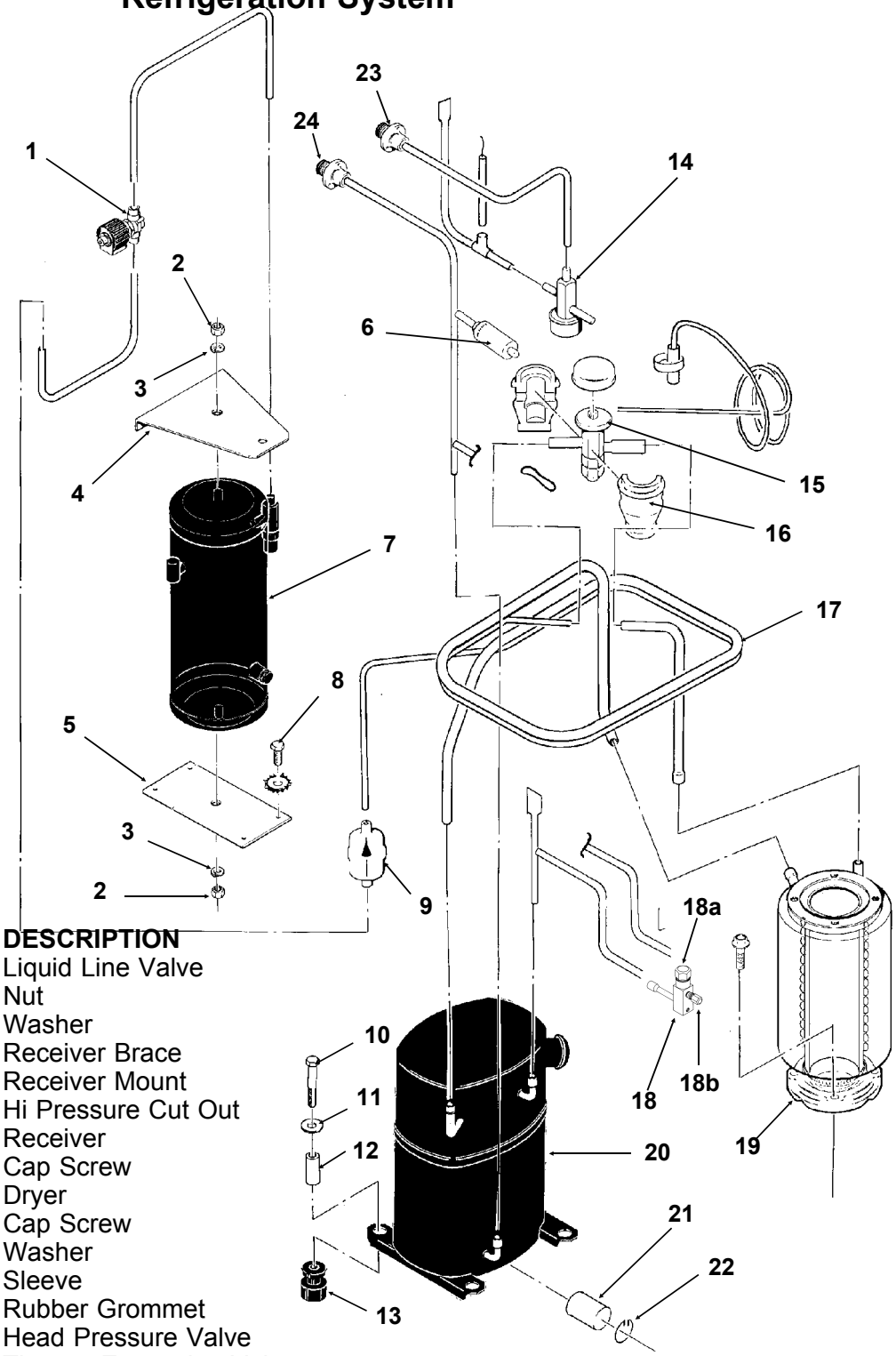


**NOTE: Compressors have internal overloads.**

| ITEM NUMBER | PART NUMBER | DESCRIPTION |
|---|---|---|
| 1 | 12-2257-21 | Liquid Line Valve |
| 2 | 03-1406-13 | Nut |
| 3 | 03-1410-06 | Washer |
| 4 | A32968-001 | Receiver Brace |
| 5 | A31801-002 | Receiver Mount |
| 6 | 11-0446-27 | Hi Pressure Cut Out |
| 7 | 16-0761-01 | Receiver |
| 8 | 03-1645-01 | Cap Screw |
| 9 | 02-3319-02 | Dryer |
| 10 | 03-1405-20 | Cap Screw |
| 11 | 03-1407-07 | Washer |
| 12 | 18-2300-27 | Sleeve |
| 13 | 18-6800-01 | Rubber Grommet |
| 14 | 11-0422-22 | Head Pressure Valve |
| 15 | 11-0477-20 | Thermo Expansion Valve |
| 16 | A32961-020 | Insulation Kit for TXV |
| 17 | A35566-001 | Suction Line |
| 18 | 16-0832-20 | Access valve |
| 18a | 16-0832-02 | Stem cap |
| 18b | 16-0832-03 | Core cap |
| 19 | A32890-020 | Evaporator |

| ITEM NUMBER | PART NUMBER | DESCRIPTION |
|---|---|---|
| 20 | 18-8716-23 | Compressor 208-230/60/1 |
| | 18-8716-25 | Compressor 200-230/60/3 |
| 21 | 18-2308-01 | Crankcase Heater |
| 22 | 18-2309-01 | Clip |
| 23 | 16-0850-03 | 3/8" Male half |
| 24 | 16-0850-01 | 1/2" Male half |

# FM1202R SERVICE PARTS
## Water System, Water Seal

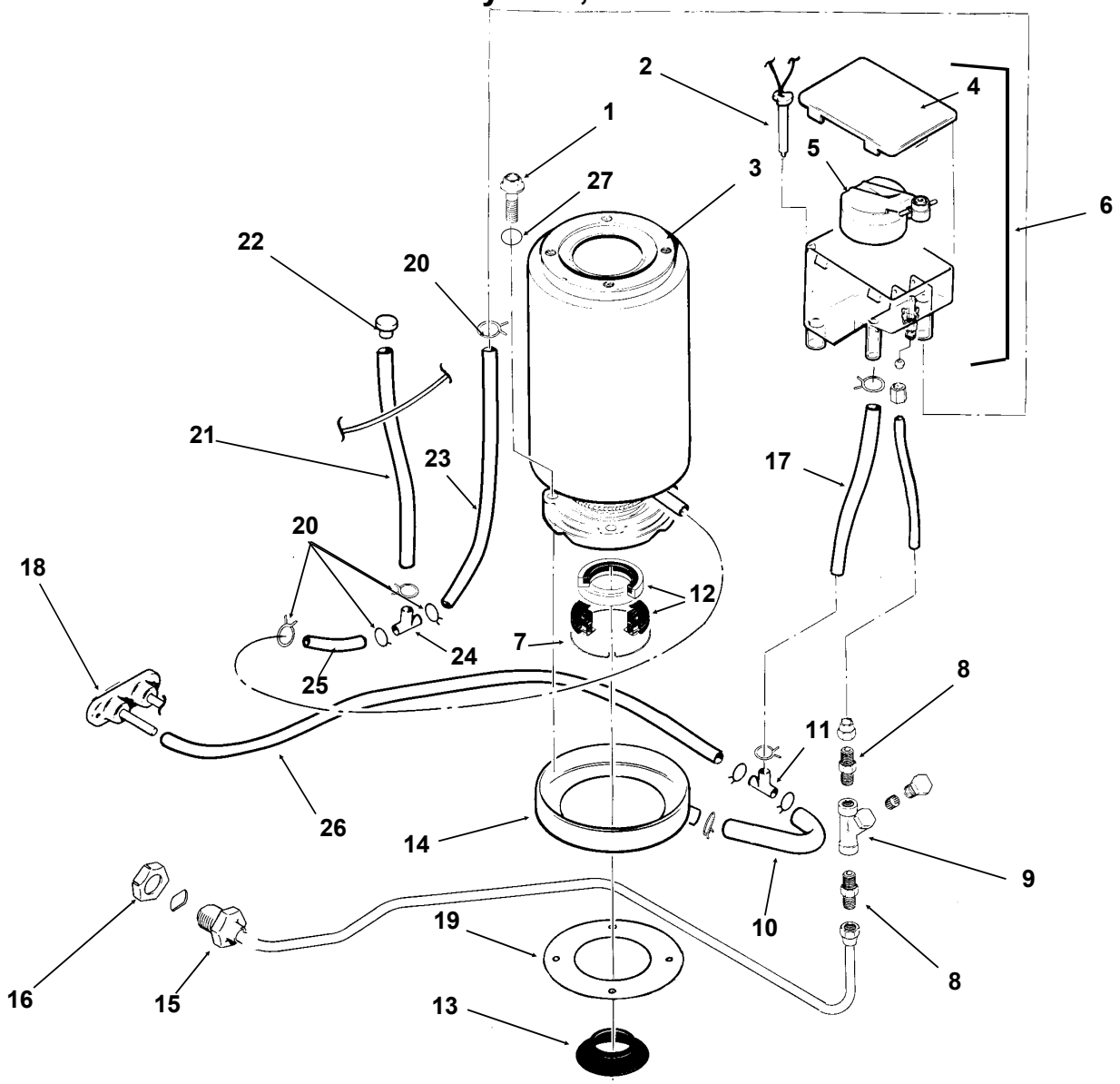


| ITEM NUMBER | PART NUMBER | DESCRIPTION |
|---|---|---|
| 1 | 03-1405-41 | Cap Screw |
| 2 | A33101-022 | Water Level Sensor |
| 3 | A32890-020 | Evaporator |
| 4 | 02-2936-01 | Res. Cover |
| 5 | A32907-001 | Float Assembly with pin, housing seal, rubber seat, insert & float |
| | 02-3190-01 | Rubber seat |
| 6 | A32929-020 | Reservoir Assembly |
| 7 | A32777-001 | Retaining Ring for Seal |
| 8 | 16-0791-01 | Half Union |
| 9 | 16-0162-00 | Strainer |
| 10 | 13-0079-03 | Tube, 3.2" req. |
| 11 | 16-0670-02 | Tee |
| 12 | 02-0929-23 | Water Seal |
| 13 | 13-0868-01 | Water Shed |
| 14 | A32050-001 | Drip Pan |
| 15 | A27318-001 | Water Inlet Fitting |
| 16 | 03-1394-01 | Pal Nut |
| 17 | 13-0079-03 | Res. Overflow, 8" req. |
| 18 | A34045-001 | Drain Casting |
| 19 | 13-0704-00 | Gasket |
| 20 | 02-2814-08 | Clamps |
| 21 | 13-0674-06 | Evap. Drain, 14" req. |
| 22 | 13-0840-01 | Plug |
| 23 | 13-0674-06 | Evap. Inlet Tube, 5" req. |
| 24 | 16-0670-01 | Tee |
| 25 | A33203-001 | Tube, Preformed |
| 26 | 13-0079-03 | Drain Tube, 24" req. |
| 27. | 03-1417-13 | Lockwasher |

# FM1202R SERVICE PARTS
## Gearmotor

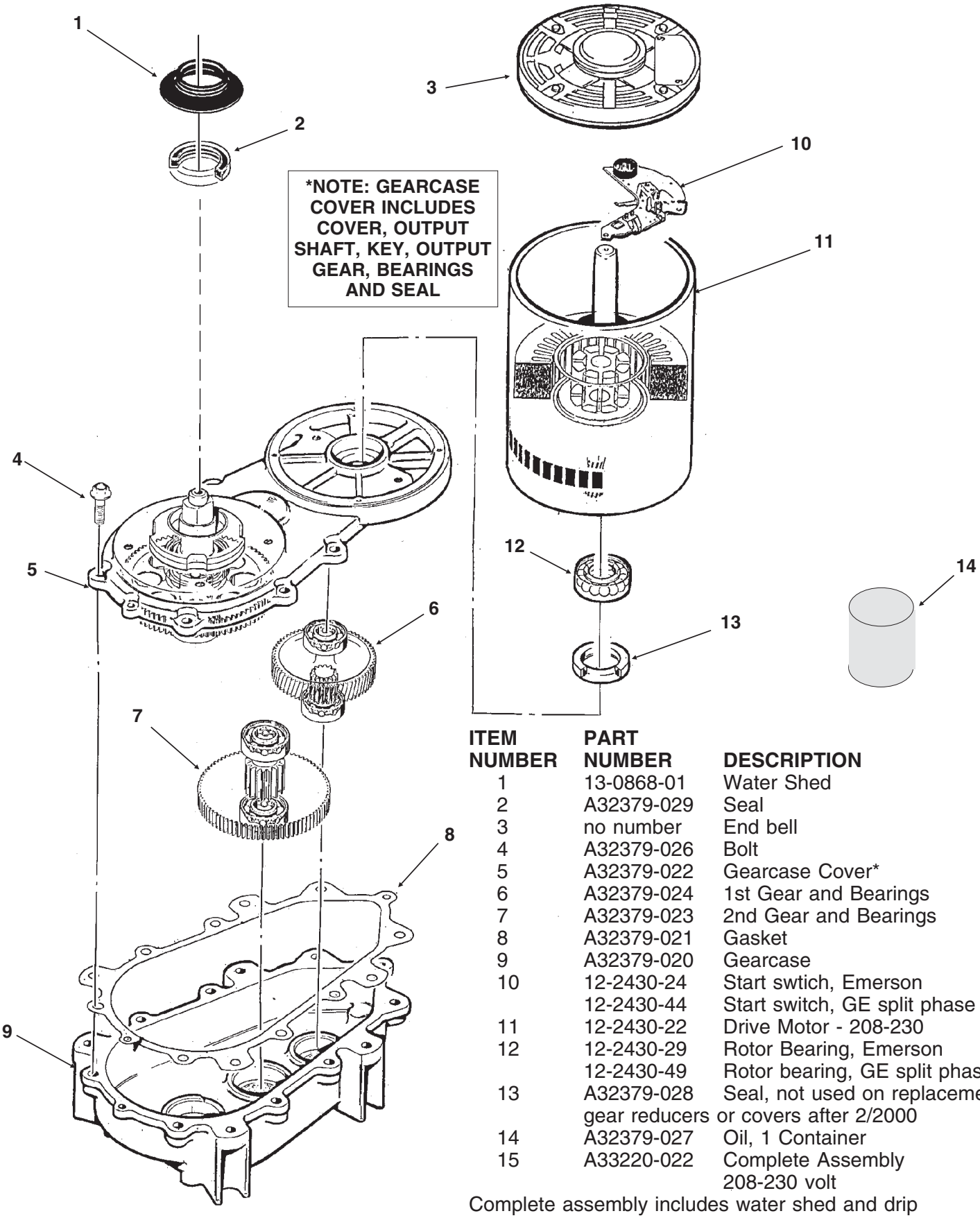


| ITEM NUMBER | PART NUMBER | DESCRIPTION |
|---|---|---|
| 1 | 13-0868-01 | Water Shed |
| 2 | A32379-029 | Seal |
| 3 | no number | End bell |
| 4 | A32379-026 | Bolt |
| 5 | A32379-022 | Gearcase Cover* |
| 6 | A32379-024 | 1st Gear and Bearings |
| 7 | A32379-023 | 2nd Gear and Bearings |
| 8 | A32379-021 | Gasket |
| 9 | A32379-020 | Gearcase |
| 10 | 12-2430-24 | Start swtich, Emerson |
| | 12-2430-44 | Start switch, GE split phase |
| 11 | 12-2430-22 | Drive Motor - 208-230 |
| 12 | 12-2430-29 | Rotor Bearing, Emerson |
| | 12-2430-49 | Rotor bearing, GE split phase |
| 13 | A32379-028 | Seal, not used on replacement gear reducers or covers after 2/2000 |
| 14 | A32379-027 | Oil, 1 Container |
| 15 | A33220-022 | Complete Assembly 208-230 volt |

Complete assembly includes water shed and drip pan gasket.

| | | |
|---|---|---|
| | A33220-030 | Gears, oil & cases, no motor |

# FM1202R SERVICE PARTS
## Evaporator, Bin Controls

**Note: Bail clamp, pn A34969-001**

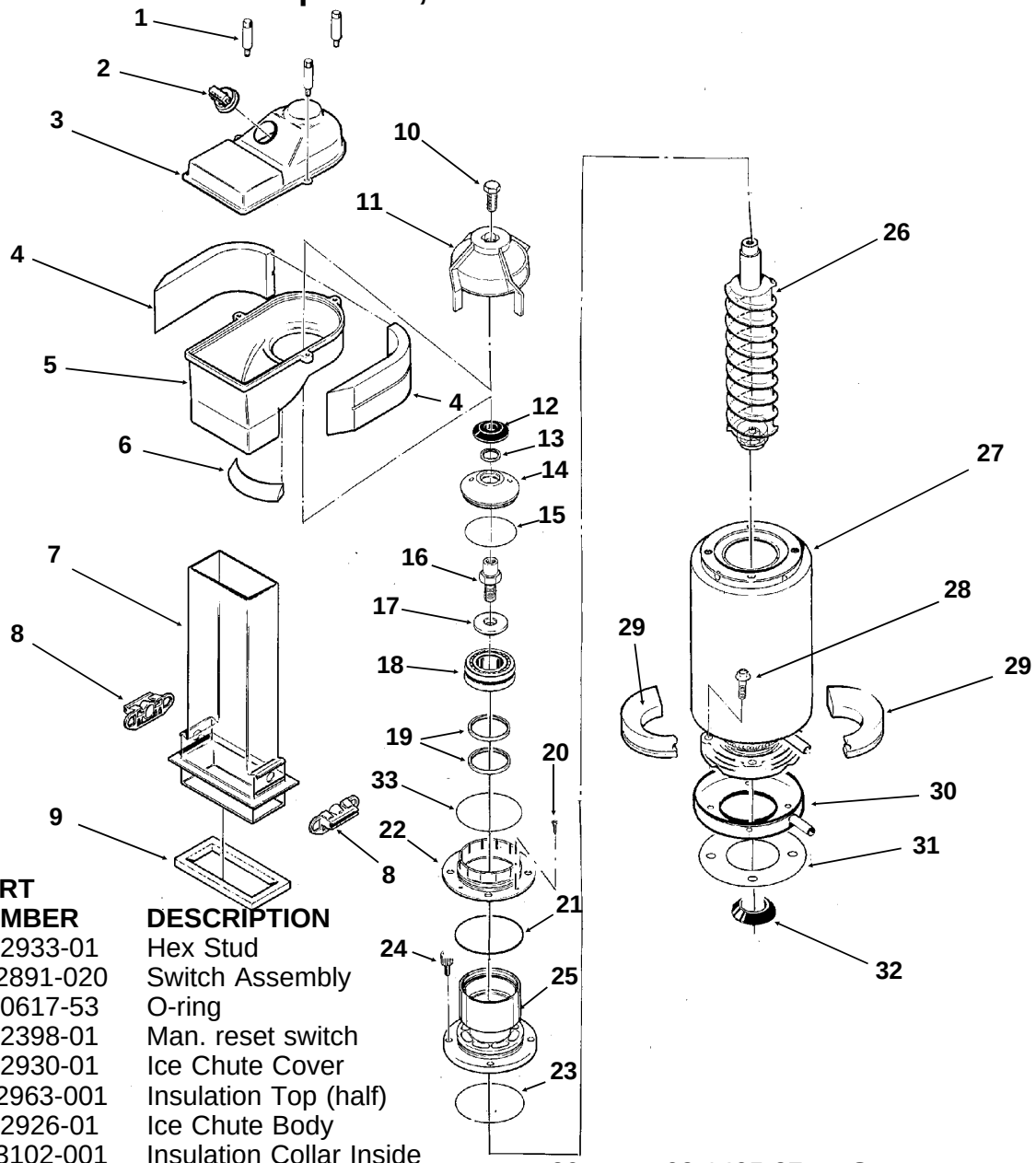


| ITEM NUMBER | PART NUMBER | DESCRIPTION |
|---|---|---|
| 1. | 02-2933-01 | Hex Stud |
| 2. | A32891-020 | Switch Assembly |
| | 13-0617-53 | O-ring |
| | 12-2398-01 | Man. reset switch |
| 3. | 02-2930-01 | Ice Chute Cover |
| 4. | A32963-001 | Insulation Top (half) |
| 5. | 02-2926-01 | Ice Chute Body |
| 6. | A33102-001 | Insulation Collar Inside |
| | A35419-020 | Strap kit |
| 7. | 02-2929-01 | Ice Chute Lower |
| 8. | A37708-021 | Ice level sensors (set of 2) |
| 9. | A32930-001 | Chute Gasket |
| 10. | 03-1405-52 | Hex Cap Screw |
| 11. | 02-3001-01 | Ice Sweep |
| 12. | 13-0871-01 | Water Shed |
| 13. | 02-2978-01 | Lip Seal |
| 14. | 02-3128-20 | Breaker Cover |
| 15. | 13-0617-54 | O-Ring |
| 16. | 08-0660-01 | Auger Stud, includes #17 |
| 17. | no number | Thrust Washer, part of #16 |
| 18. | A34559-020 | Bearing |
| 19. | 02-2977-01 | Lip Seal |
| 20. | 03-1405-27 | Screw |
| 21. | 13-0617-52 | O-Ring |
| 22. | 02-2916-01 | Slotted Collar |
| 23. | 13-0617-45 | O-Ring |
| 24. | 03-1544-08 | Soc. Head Screw |
| 25. | A34505-020 | Breaker (Divider) (includes 18 & 19) |
| 26. | A38071-022 | Auger |
| 27. | A32890-020 | Evaporator |
| 28. | 03-1405-41 | Cap Screw |
| 29. | A32962-001 | Insulation Bot. (half) |
| | A32962-002 | Insulation (half) |
| 30. | A32050-001 | Drip Pan |
| 31. | 13-0704-00 | Drip Pan Gasket |
| 32. | 13-0868-01 | Water Shed |
| 33 | 13-0617-49 | O-ring |

# FM1202R SERVICE PARTS
## Control Box

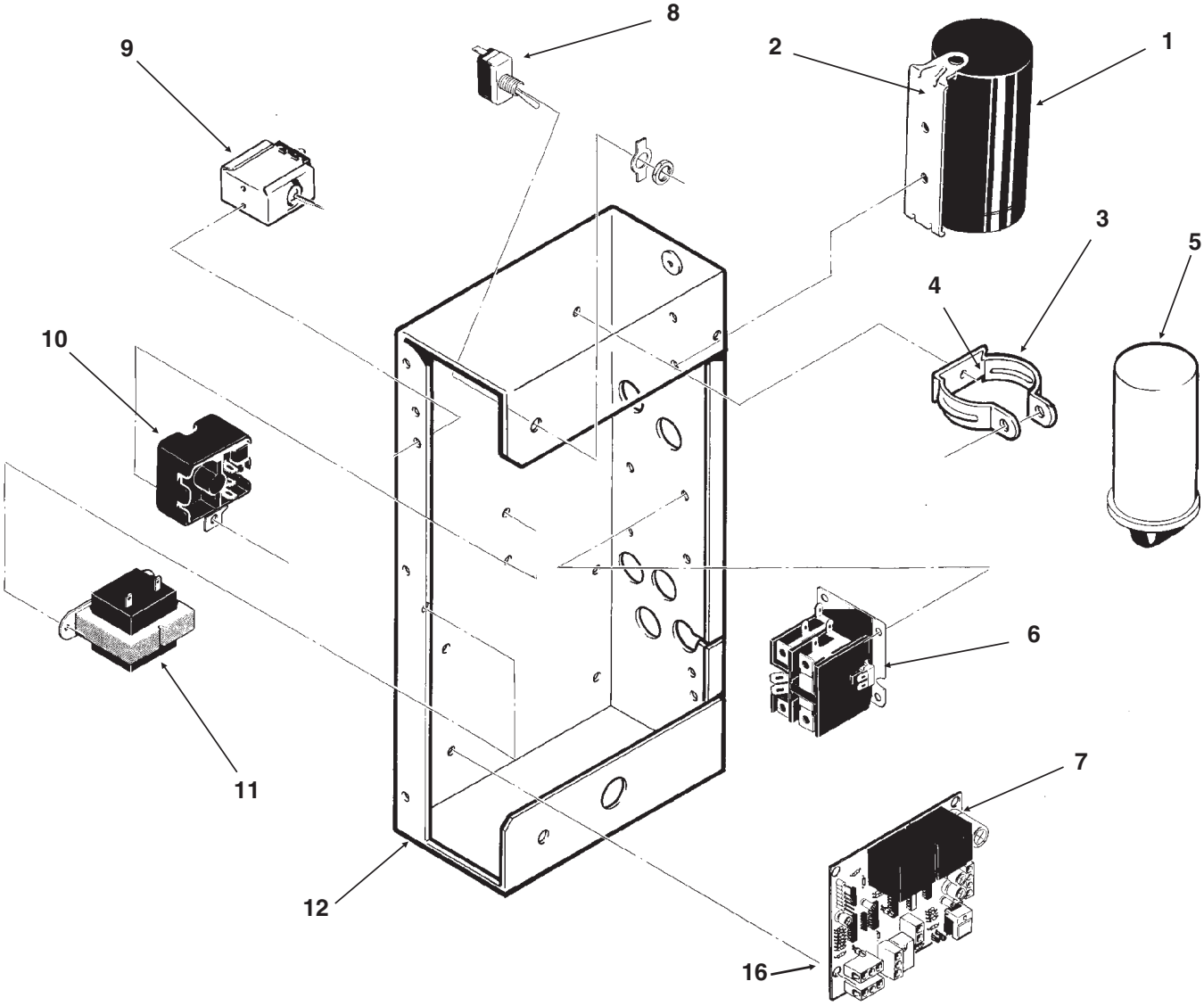


| ITEM NUMBER | PART NUMBER | DESCRIPTION |
|---|---|---|
| 1 | 18-1901-15 | Start Capacitor |
| | 18-2200-38 | Start Capacitor Cap. |
| 2. | 18-2200-39 | Start Capacitor Bracket |
| | 03-1638-04 | Screw |
| | 03-1417-15 | Lockwasher |
| 3. | A32872-001 | Run Cap Bracket |
| | 03-1652-02 | Bolt |
| | 03-0255-04 | Wing Nut |
| 4. | 03-1638-03 | Screw |
| 5. | 18-1902-53 | Run Capacitor |
| 6. | 12-2469-02 | Single Phase Contactor |
| | 12-0739-02 | Three Phase Contactor |

| ITEM NUMBER | PART NUMBER | DESCRIPTION |
|---|---|---|
| 7 | A37750-021 | Circuit Board |
| 8. | 12-0426-01 | Master Switch |
| 9. | 11-0420-23 | Pump Down Control |
| 10 | 18-1903-33 | Potential Relay |
| 11. | 12-2285-22 | Transformer |
| 12 | no number | Control Box Assy |
| NOT ILLUSTRATED | | |
| 13. | 12-2337-02 | 3 Pin Plug Assy |
| | (Safety Circuit to Circuit Board) | |
| 14. | 12-2340-01 | 4 Pin Plug Assy |
| | (Transformer to Circuit Board) | |
| 15. | A34055-001 | Control box cover |
| 16 | 12-2350-01 | Spacer/screw |

# FM1202R SERVICE PARTS
## REMOTE CONDENSER

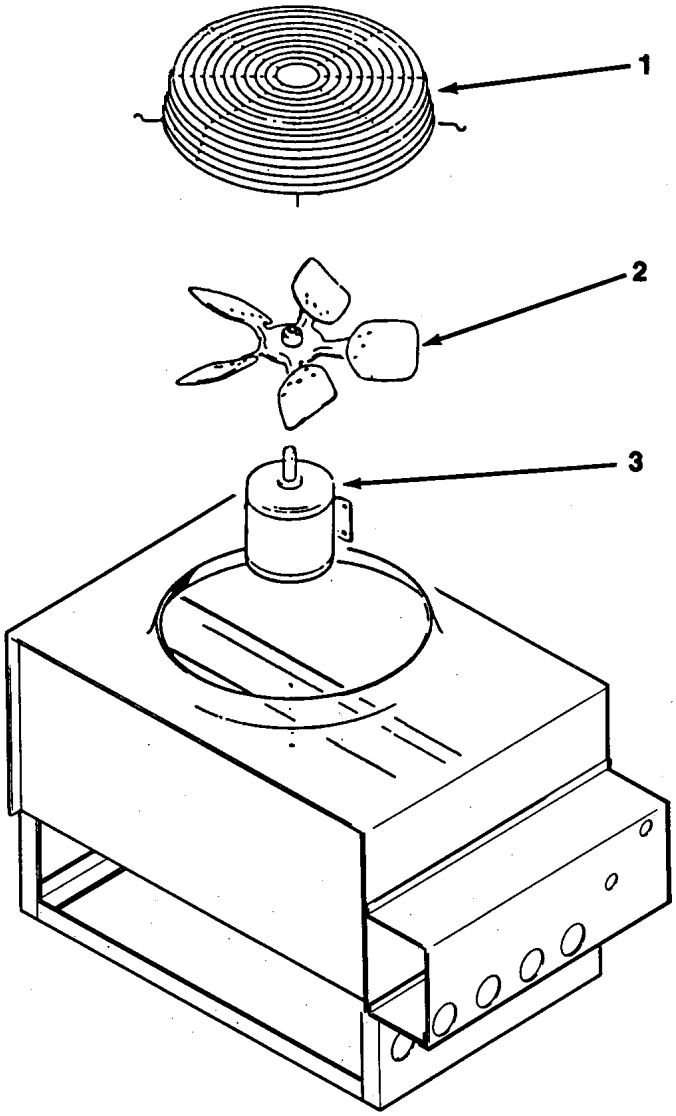


**RC1022-32A or RC1222-32A**

| ITEM NUMBER | PART NUMBER | DESCRIPTION |
|---|---|---|
| 1. | 02-2628-01 | Fan Guard |
| 2. | 18-6304-01 | Fan Blade |
| 3. | 18-5301-01 | Fan Motor |
| 4. | 16-0701-02 | Line connection, female half 3/8" |
| 5. | 16-0701-10 | Line connection, female half 1/2" |

# FM1202R SERVICE PARTS
## Wiring Diagram, 208-230/60/1

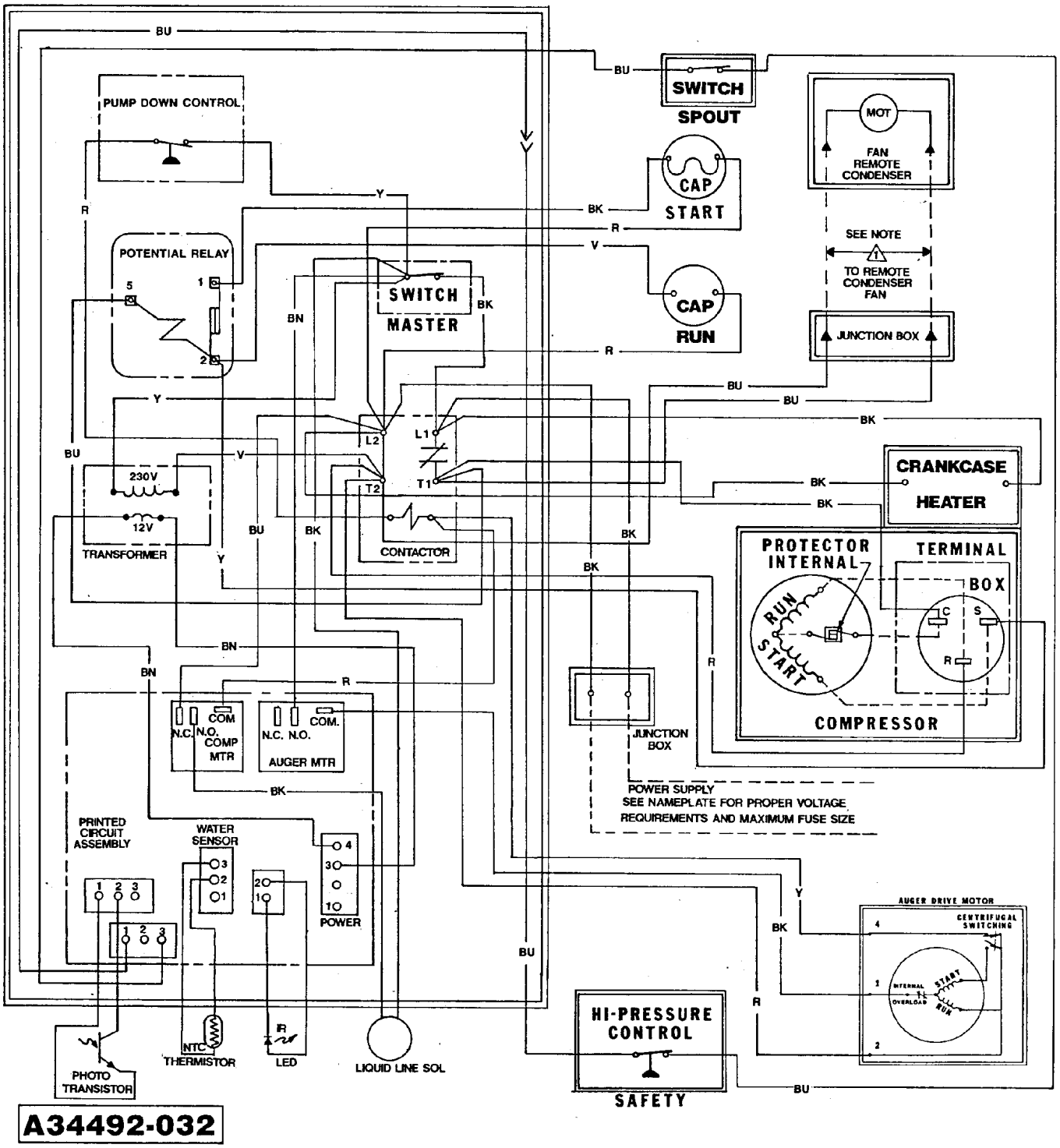

# FM1202R SERVICE PARTS
## Schematic Diagram, 208-230/60/1

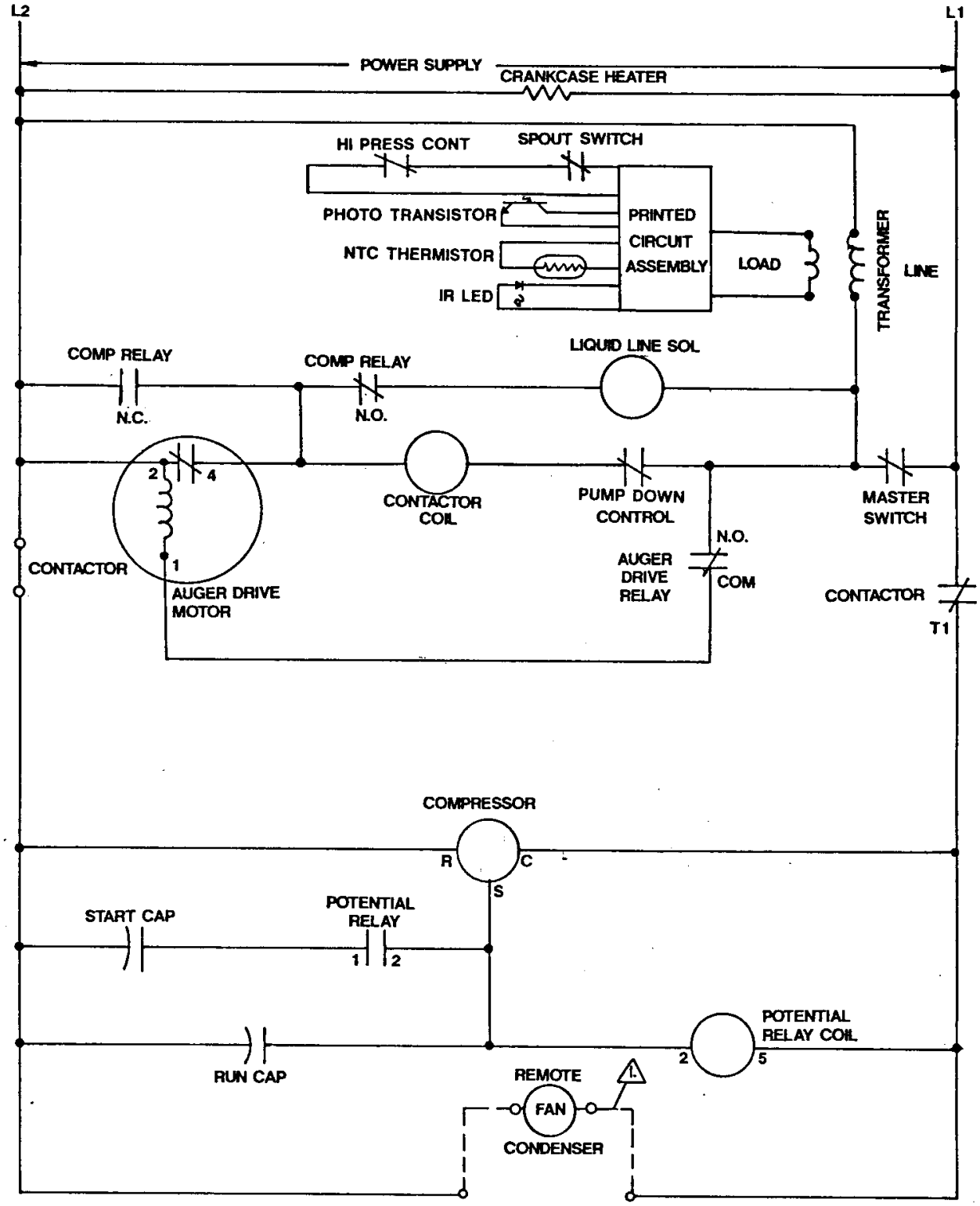


**USE COPPER CONDUCTORS ONLY THIS UNIT MUST BE GROUNDED**

All Controls Shown in Normal Ice Making Mode.

Note: Dashed lines indicate field wiring which must be installed in accordance with the National Electric Code Using a Minimum of 14 ga. awg. wire.

# FM1202R SERVICE PARTS
## Wiring Diagram, 208-230/60/3

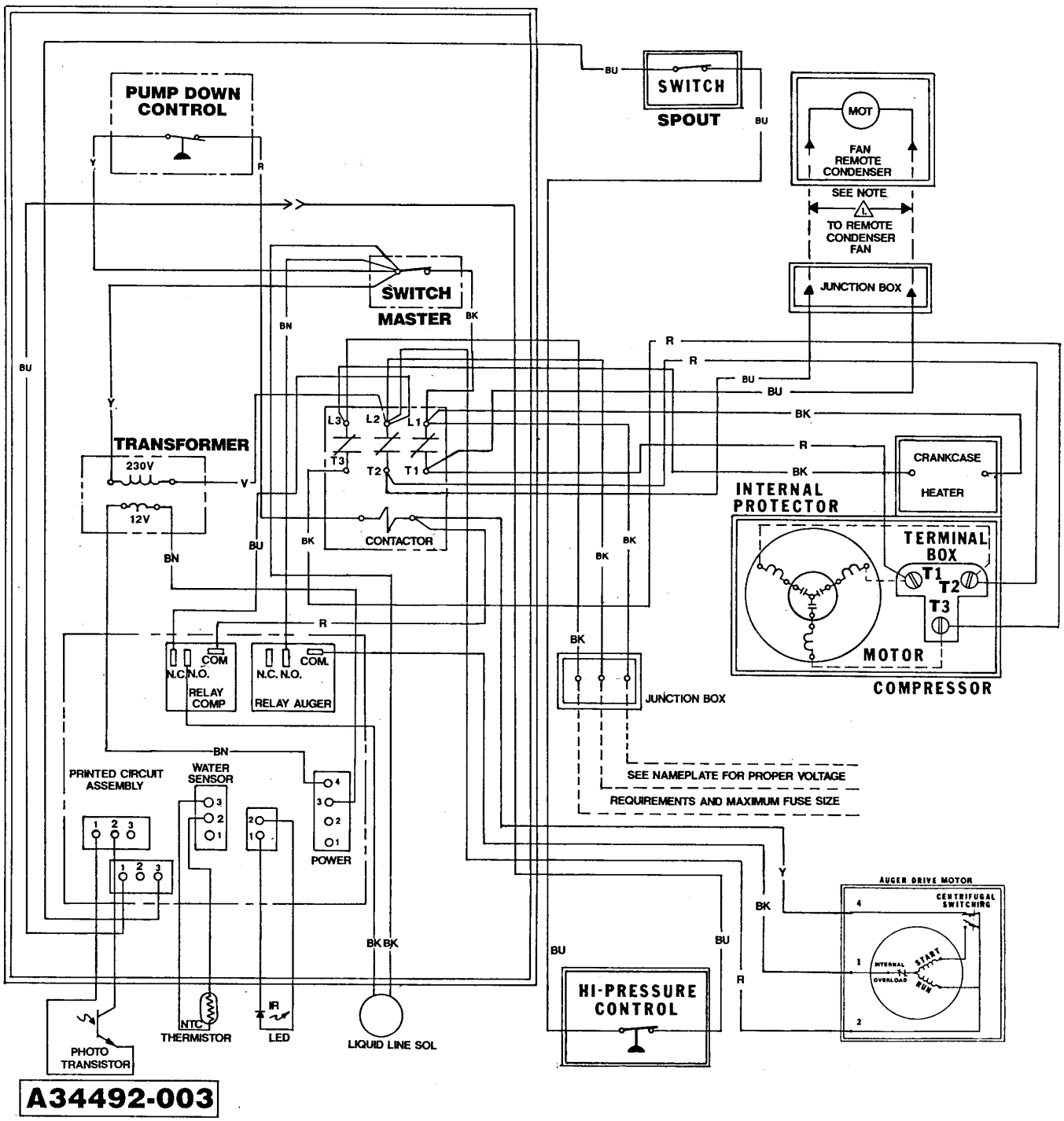

# FM1202R SERVICE PARTS
## Schematic Diagram, 208-230/60/3

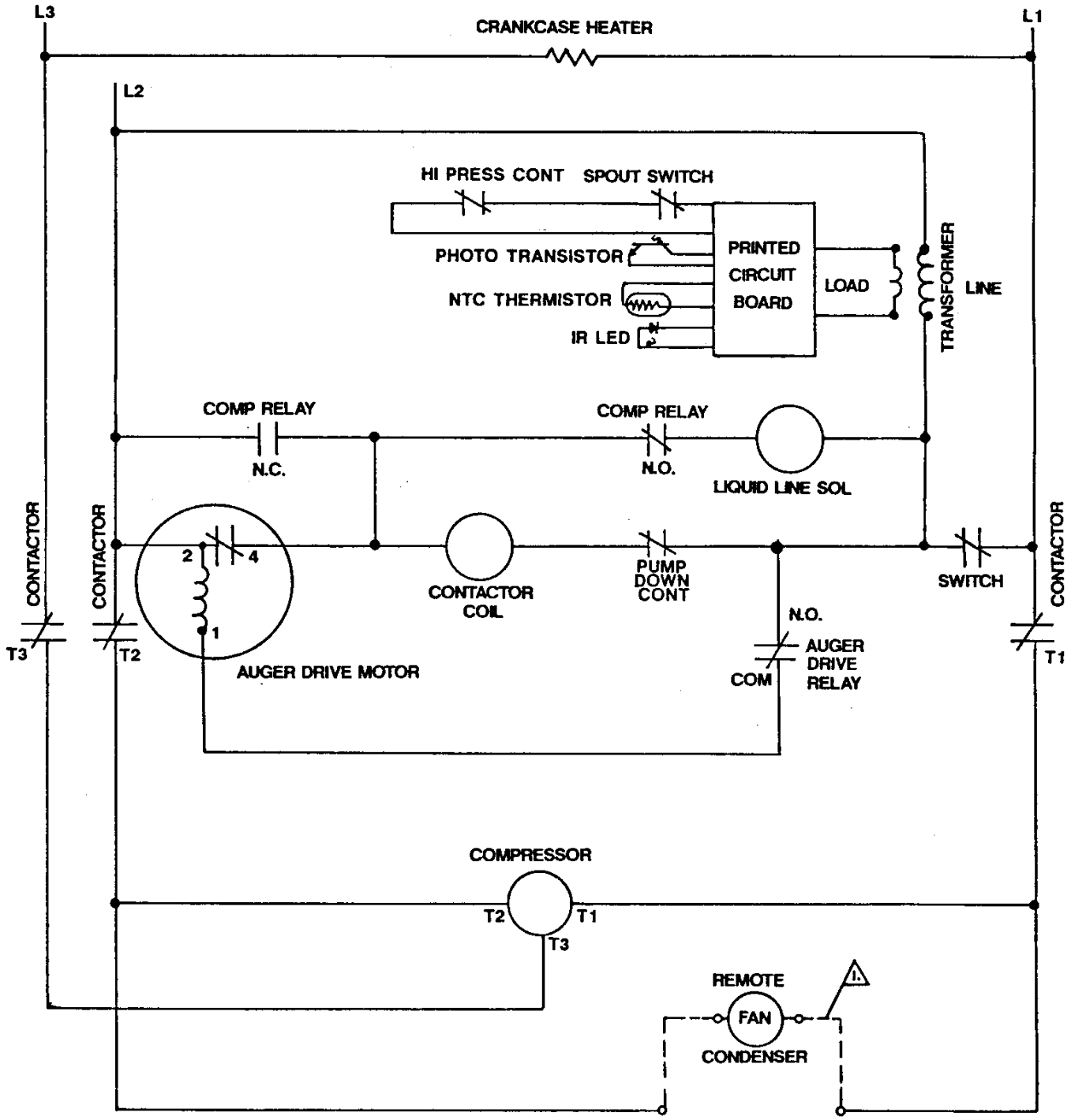


**USE COPPER CONDUCTORS ONLY THIS UNIT MUST BE GROUNDED**

All Controls Shown in Normal Ice Making Mode.

Note: Dashed lines indicate field wiring which must be installed in accordance with the National Electric Code Using a Minimum of 14 ga. awg. wire.