Eclipse 1300, 1600 Service Parts

This part list contains the service parts for the Eclipse 1300 and 1600 systems.

The models that are covered include:

- CME1386
- CME1686
- CP1316
- ERC1086

Table of Contents

CME1386 and CME1686 Cabinet . . . . . Page 2

CME1386 and CM1686 Interior Parts . . . . . Page 3

CME1386 Refrigeration System . . . . . Page 4

CME1686 Refrigeration System . . . . . Page 5

CME1386 and CME1686 Electrical . . . . . Page 6

CP1316 Cabinet . . . . . Page 7

CP1316 Refrigeration Systems . . . . . Page 8

CP1316 Control Box . . . . . Page 9

Remote Condensers . . . . . Page 10

CME1386 or CME1686 Schematic Diagram . . . . . Page 11

CME1386 and CME1686 Wiring Diagram . . . . . Page 12

CP1316 Single Phase Schematic Diagram . . . . . Page 13

CP1316 Single Phase Wiring Diagram . . . . . Page 14

CP1316 Three Phase Wiring Diagram . . . . . Page 15

CP1316 Three Phase Schematic Diagram . . . . . Page 16

Eclipse 1300, 1600 Service Parts

CME1386 and CME1686 Cabinet

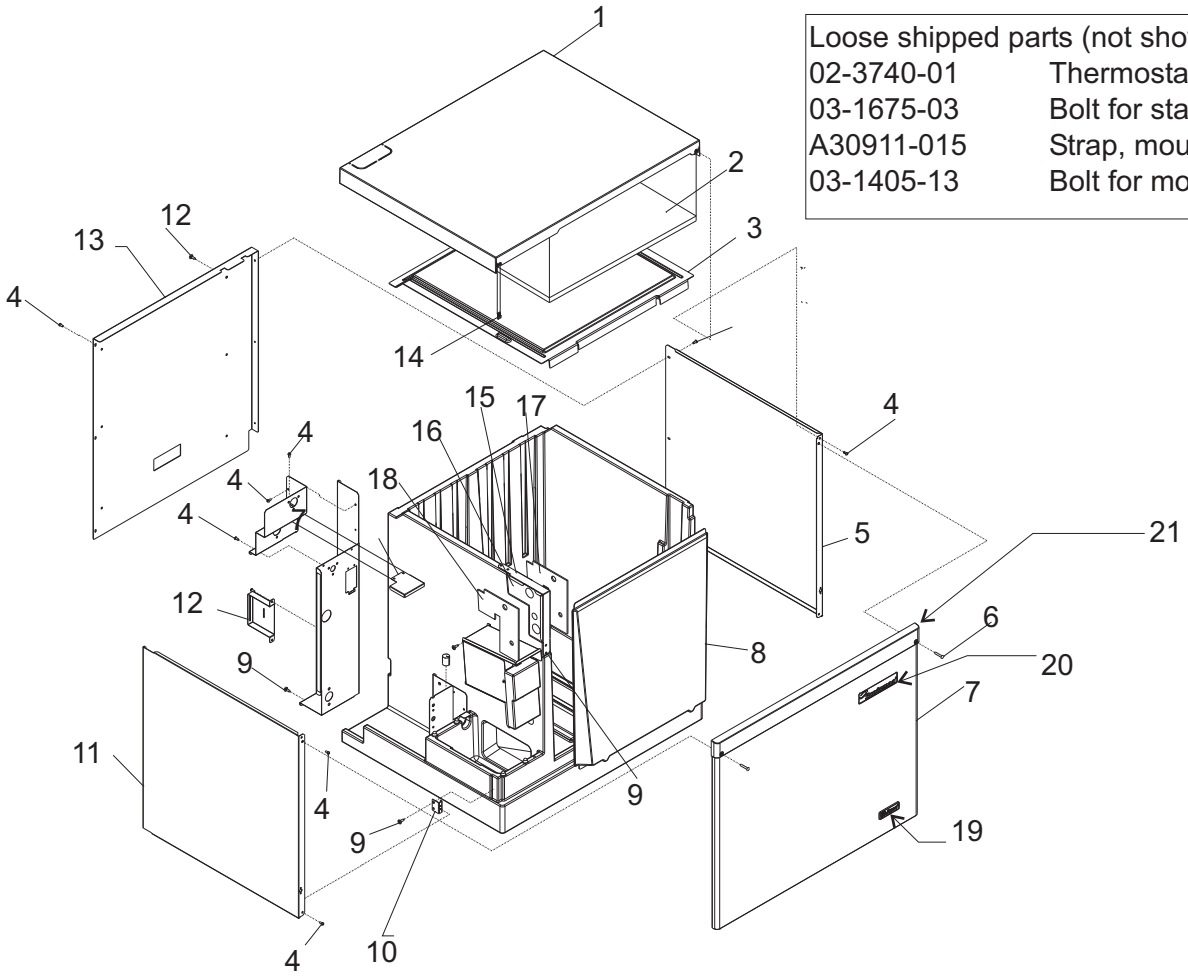

Loose shipped parts (not shown)	
02-3740-01	Thermostat Bracket
03-1675-03	Bolt for stat bracket
A30911-015	Strap, mounting
03-1405-13	Bolt for mounting

Item Number	Part Number	Description
1	02-4001-21	Top panel
2	02-3783-01	Insulation
3	02-3955-01	Inner top panel
4	03-1531-01	Screw
5	A38281-021	Right side panel
6	03-1735-01	Panel screw
7	A38373-021	Front panel, includes items 19 and 20
8	02-3702-01	Evaporator cover
	02-3742-01	Insulation for cover
9	03-1404-18	Screw
10	A38338-001	Side mounting bracket
11	A38280-021	Left side panel
12	A38339-001	Slotted panel bracket
13	A38279-001	Back panel

Item Number	Part Number	Description
14	03-1423-06	Speed nut
15.	A37218-001	Tube cover
16	02-3696-01	Tube grommet
17	02-3696-02	Grommet left
18	02-3696-03	Grommet right
19	15-0811-01	Eclipse emblem
20	15-0808-01	Scotsman emblem
21	02-3794-01	Trim strip
Not Shown, Front Panel Fasteners:		
22	03-1734-01	Insert
23	03-1417-27	Washer
24	03-1733-01	Ball stud

Eclipse 1300, 1600 Service Parts

CME1386 and CM1686 Interior Parts

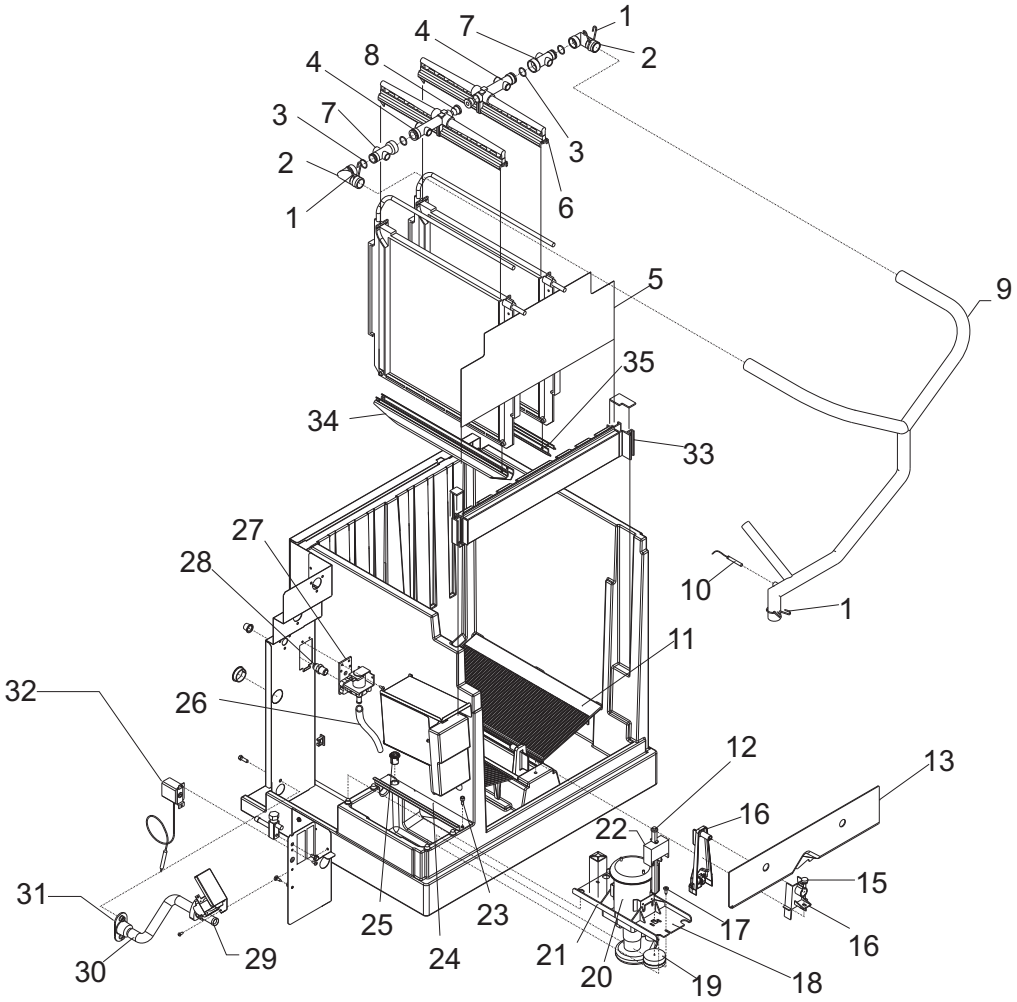

Item Number	Part Number	Description	Item Number	Part Number	Description
1	02-3725-01	Hose clamp	17	03-1404-18	Screw
2	02-3613-01	Elbow - all L & 1686 R	18	02-3388-04	Pump bracket half
	02-3520-01	Elbow - right CME1386	19	02-3341-01	Float
3	13-0617-48	O-ring	20	12-2876-21	Water pump
4	02-3518-01	Water manifold	21	02-3388-05	Pump bracket half
5	02-3706-01	Top front inner panel	22	11-0539-51	Water level sensor
6	02-2527-01	Water distributor	23	03-1691-01	Plastic screw
7	02-3519-01	Manifold fitting	24	02-3960-01	Sump cover
8	13-0840-01	Rubber plug	25	02-3978-01	Hose bushing
9	02-3660-01	Pump hose (1686)	26	13-0674-02	Hose, order 2, use 14 in.
	02-3660-02	Pump hose (1386)	27	12-2666-01	Water inlet sol valve
10	11-0515-21	Temp sensor set	28	16-0355-00	Coupling half
11	02-3337-02	Cube deflector	29	11-0514-02	Purge valve
12	02-3383-07	CME1386 float stick	30	02-3980-01	Hose
	02-3383-08	CME1686 float stick	31	02-3692-21	Drain fitting
13	02-3680-01	Lower front inner panel	32	11-0521-21	Bin thermostat
14	11-0540-21	Ice sensor set	33	A37337-001	Evaporator bracket
15	02-3689-01	Front sensor mount	34	02-3672-02	Left water trough
16	03-0727-09	Mounting screw	35	02-3672-01	Right water trough

Eclipse 1300, 1600 Service Parts

CME1386 Refrigeration System

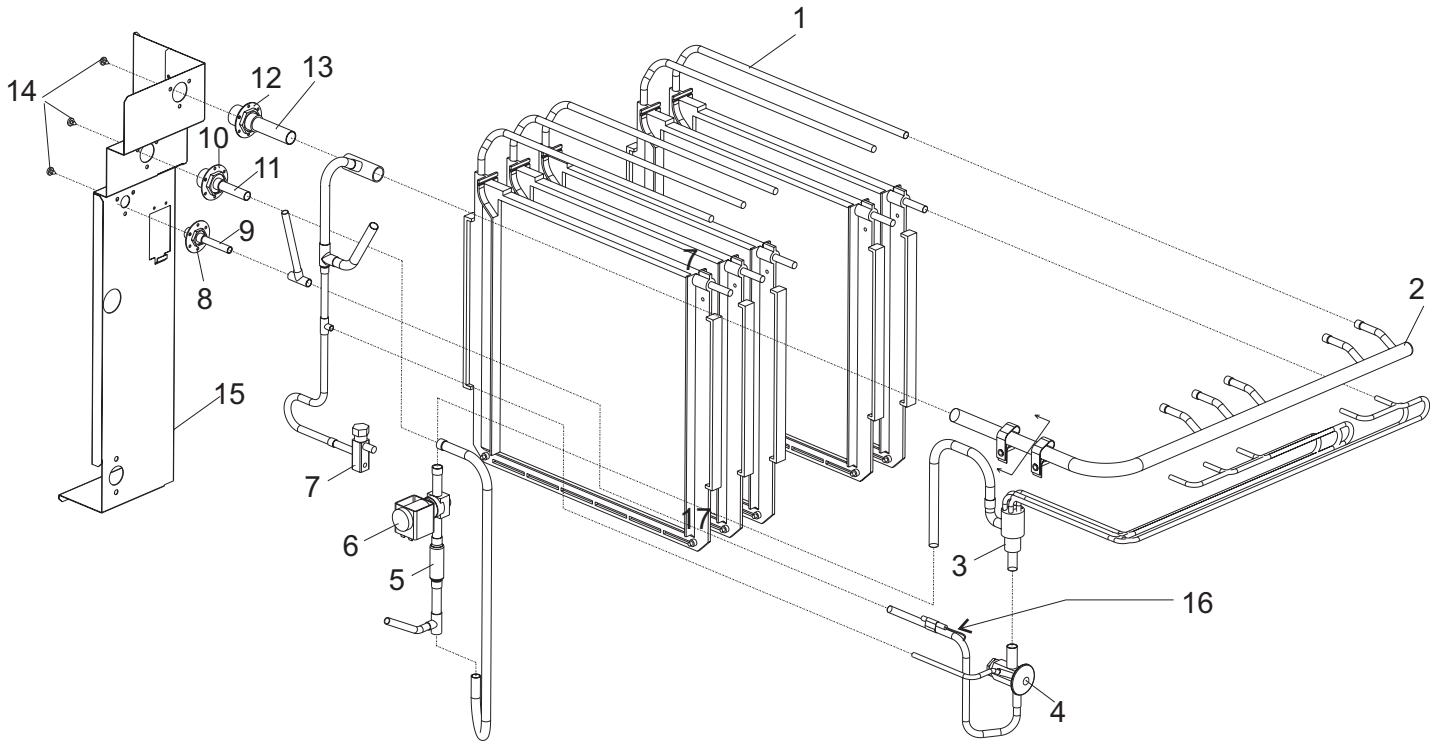

Item Number	Part Number	Description
1	A37315-021	Evaporator
2	16-1102-01	Suction header
3	A38436-021	Distributor assembly
4	16-1066-21	TXV ANE1 ¼ SZ
	02-3792-01	TXV insulation
5	16-1063-03	Strainer
6	11-0507-21	Vapor inlet valve
7	16-0832-20	Low side access valve

Item Number	Part Number	Description
8	16-0701-07	Mounting flange
9	16-0850-03	Quick connect
10	16-0701-14	Mounting flange
11	16-0850-01	Quick connect
12	16-0701-18	Mounting flange
13	16-0850-04	Quick connect
14	03-1405-15	Screw
15	A38336-001	Bracket
16	11-0515-21	Temp sensor set

Eclipse 1300, 1600 Service Parts

CME1686 Refrigeration System

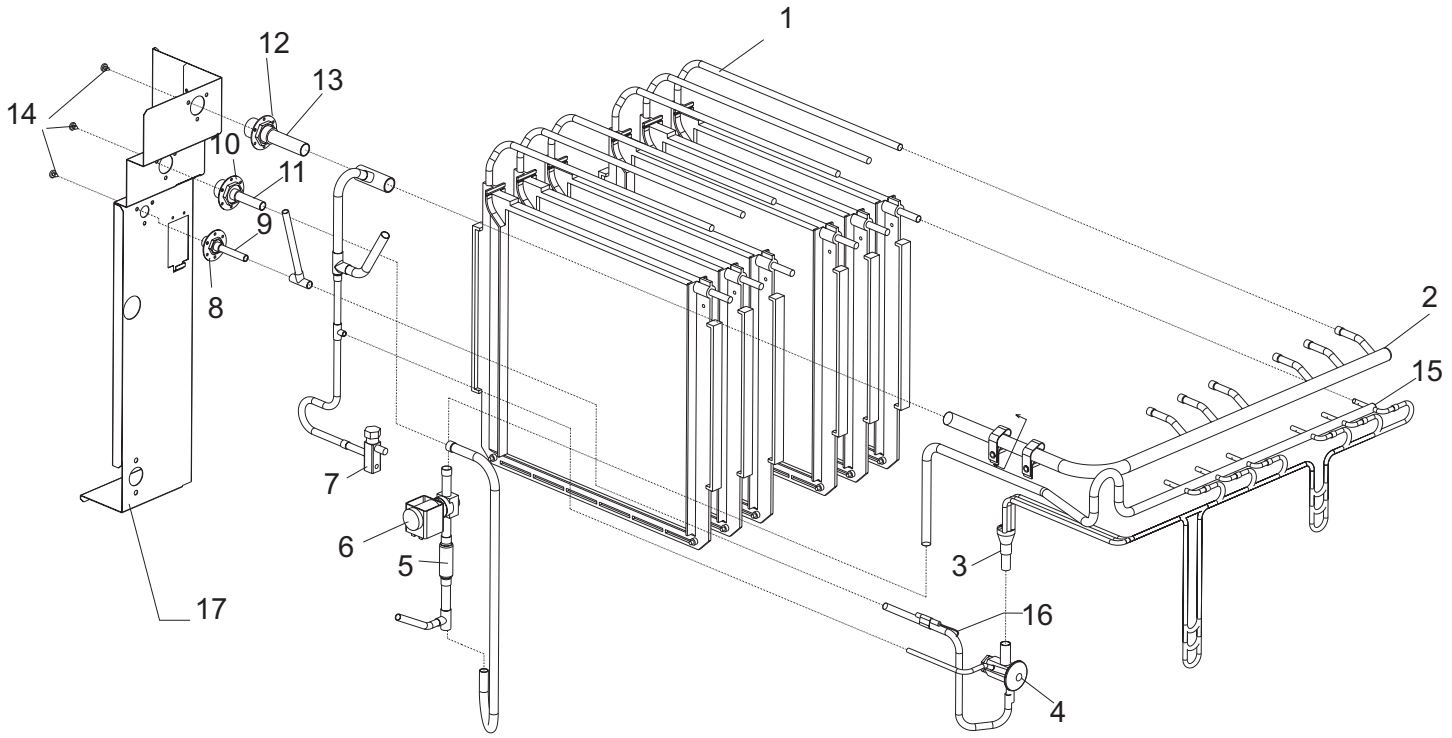

Item Number	Part Number	Description
1	A37315-021	Evaporator
2	16-1102-02	Suction header
3	A38437-021	Distributor assembly
4	16-1066-21	TXV ANE1 ¼ SZ
	02-3792-01	TXV insulation
5	16-1063-03	Strainer
6	11-0507-22	Vapor inlet valve
7	16-0832-20	Low side access valve

Item Number	Part Number	Description
8	16-0701-07	Mounting flange
9	16-0850-03	Quick connect
10	16-0701-14	Mounting flange
11	16-0850-01	Quick connect
12	16-0701-18	Mounting flange
13	16-0850-04	Quick connect
14	03-1405-15	Screw
15	16-1106-01	Hot gas header
16	11-0515-21	Temp sensor set
17	A38336-001	Bracekt

Eclipse 1300, 1600 Service Parts

CME1386 and CME1686 Electrical

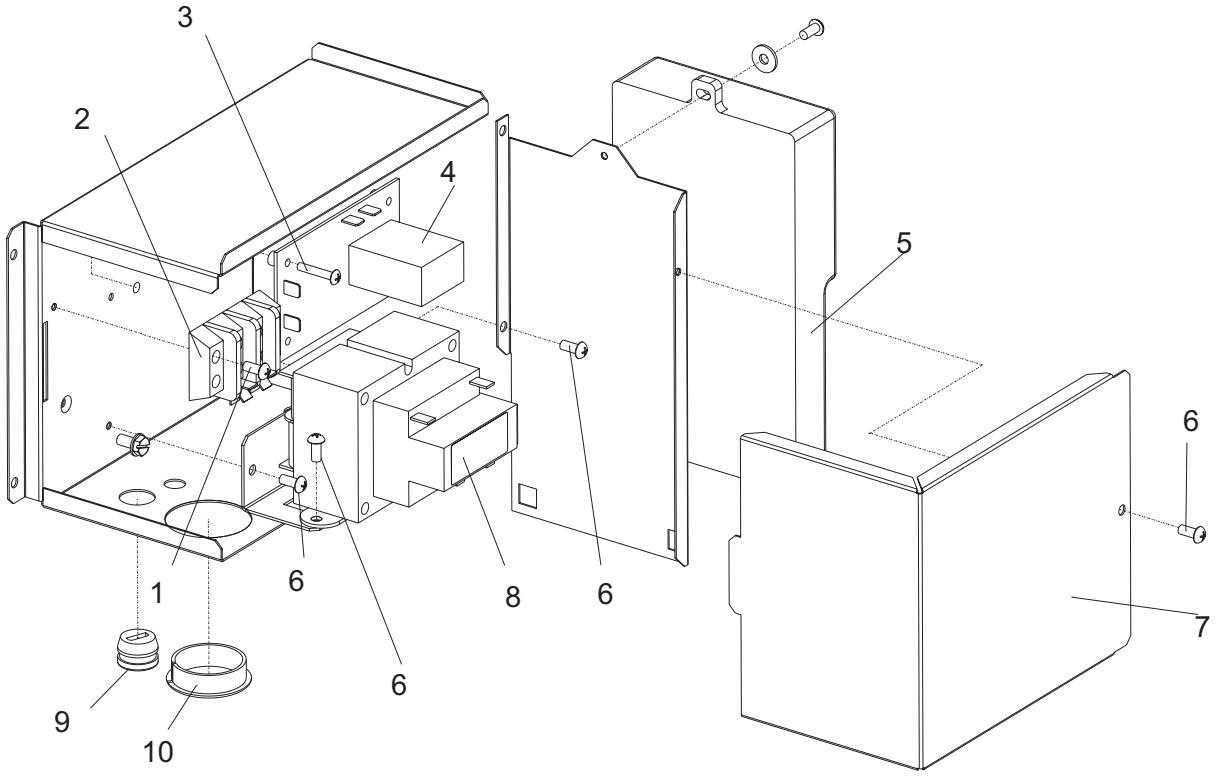

Item Number	Part Number	Description
1	03-1531-08	Screw
2	12-2780-01	Terminal block
3	03-1638-01	Screw
4	11-0531-21	Purge valve timer
5	12-2838-23	Controller
6	03-1531-01	Screw
7	A38284-001	Control box cover
8	12-2860-01	Transformer
9	12-0629-08	Snap bushing
10	12-1213-13	Snap bushing

Not illustrated:

11	12-1638-20	Power cord
12	12-2878-01	Hi voltage harness
13	12-2877-01	Lo voltage harness

Eclipse 1300, 1600 Service Parts

CP1316 Cabinet

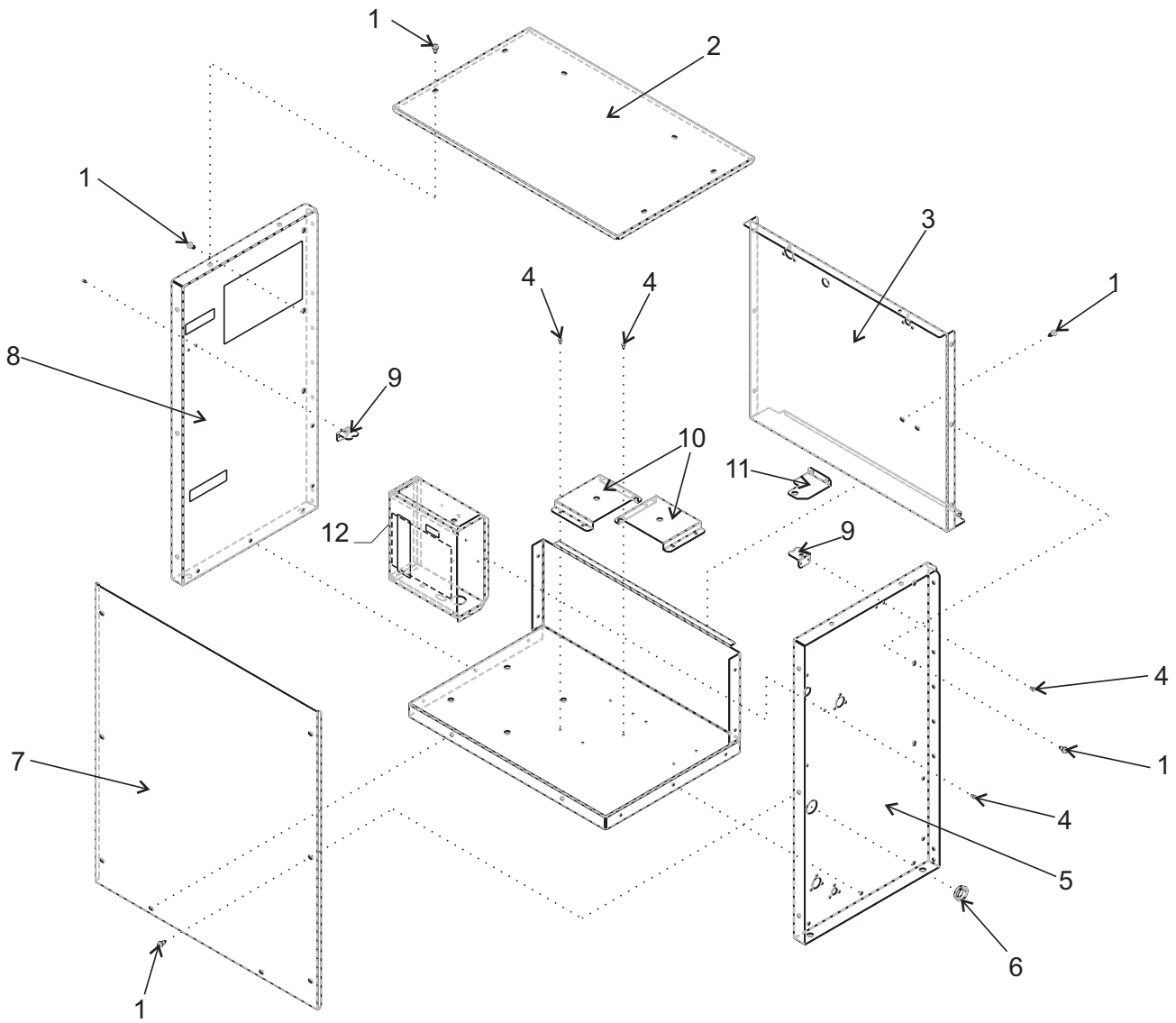

Item Number	Part Number	Description
1	03-1645-01	Screw
2	A37853-001	Top cover
3	A37845-001	Back panel
4	03-1531-01	Screw
5	A37829-001	Right side panel
6	12-1213-20	Snap bushing
7	A37896-001	Front cover
8	A37829-002	Left side panel
9	A37962-001	Service valve bracket

Item Number	Part Number	Description
10	A37948-001	Receiver or accumulator bracket
11	A37949-001	Receiver top bracket
12	A38430-001	Control box cover

Eclipse 1300, 1600 Service Parts

CP1316 Refrigeration Systems

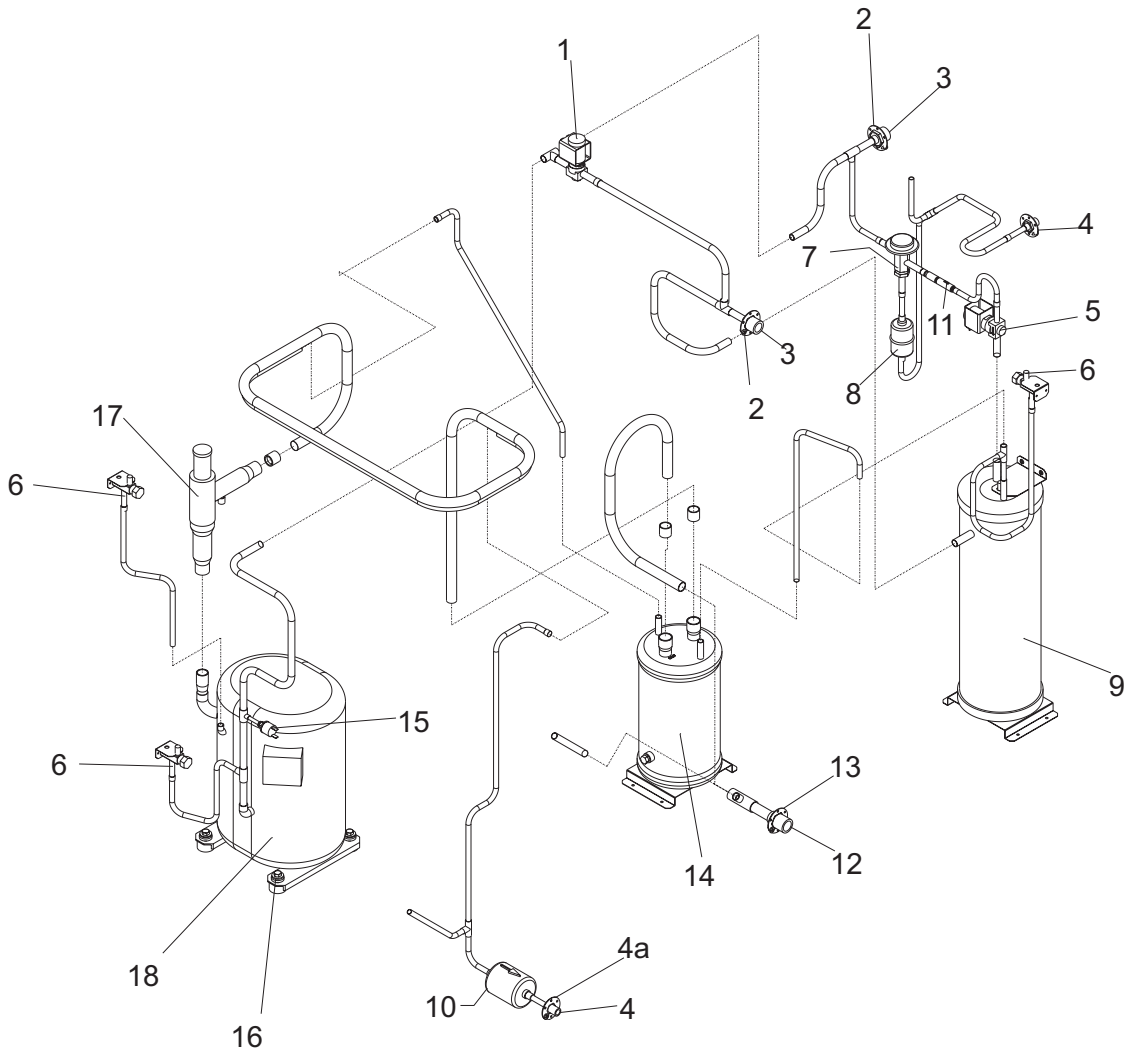

Item Number	Part Number	Description
1	11-0507-23	By pass valve
2	16-0701-14	Mounting flange
3	16-0850-01	Discharge quick connect
4	16-0850-03	Liquid quick connect
4a	16-0701-07	Mounting flange
5	11-0546-21	Liquid inlet valve
6	16-0832-20	Access valve
7	16-1044-01	Headmaster
8	02-3231-02	Filter
9	16-1085-01	Receiver
10	02-3319-02	Filter drier
11	16-1029-01	Check valve
12	16-0850-04	Suction quick connect
13	16-0701-18	Mounting flange
14	16-1109-01	Accumulator
15	11-0501-22	Hi pressure cut out
16	18-2300-27	Mounting grommet
	18-2300-26	Sleeve
	03-1406-07	Washer
	03-1404-15	Cap screw
17	16-1096-01	CPR valve
18	Compressors	

CP1316-32	single phase	18-8751-23
CP1316-2	three phase	18-8751-25

All compressors are 208-230 volt, 60 Hz.

Single phase compressors include starting components. All include a drier and crankcase heaters.

Eclipse 1300, 1600 Service Parts

CP1316 Control Box

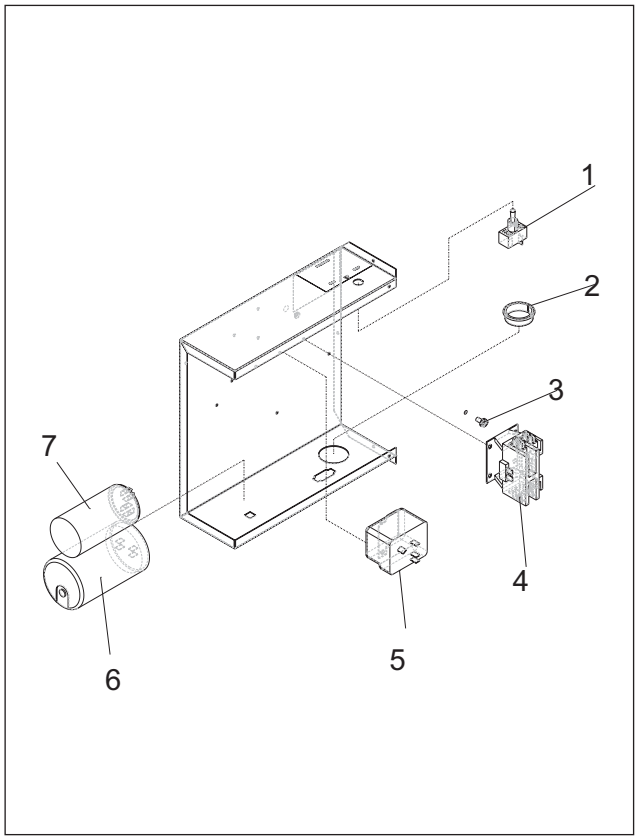

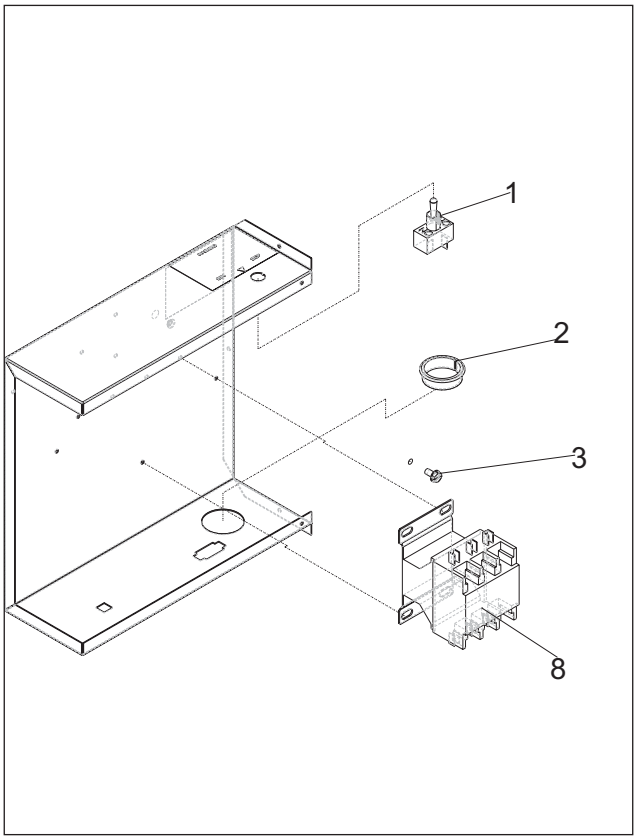

Item Number	Part Number	Description
1	12-0426-01	Toggle switch
2	12-1213-20	Snap bushing
3	03-1531-01	Mounting screw
4	12-2469-01	Single phase contactor
5	18-1903-46	Potential relay
6	18-1901-27	Start capacitor
7	18-1902-56	Run capacitor
8	12-2533-01	Three phase Contactor

Eclipse 1300, 1600 Service Parts

Remote Condensers

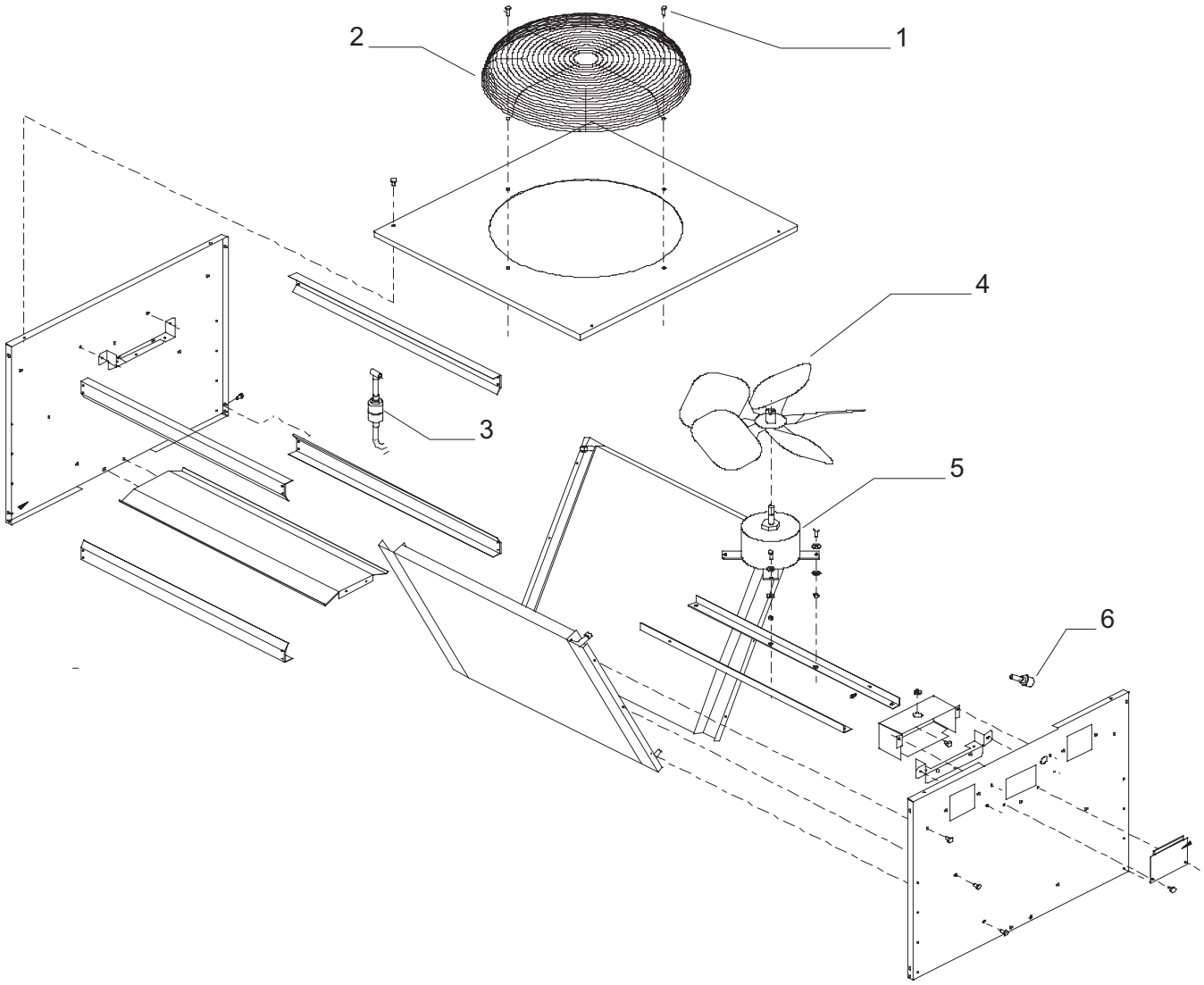

Model ERC1086

Item Number	Part Number	Description
1	03-1405-08	Screw
2	02-3575-01	Fan guard
3	02-3231-03	Filter
4	18-8816-01	Fan blade
5	12-2651-01	Fan motor
6	16-1057-04	Quick connect, discharge
	16-1057-03	Quick connect, liquid

Not Shown:

	A37169-001	Leg
	A37170-001	Leg brace
	03-1645-01	Screw for legs

Eclipse 1300, 1600 Service Parts

CME1386 or CME1686 Schematic Diagram

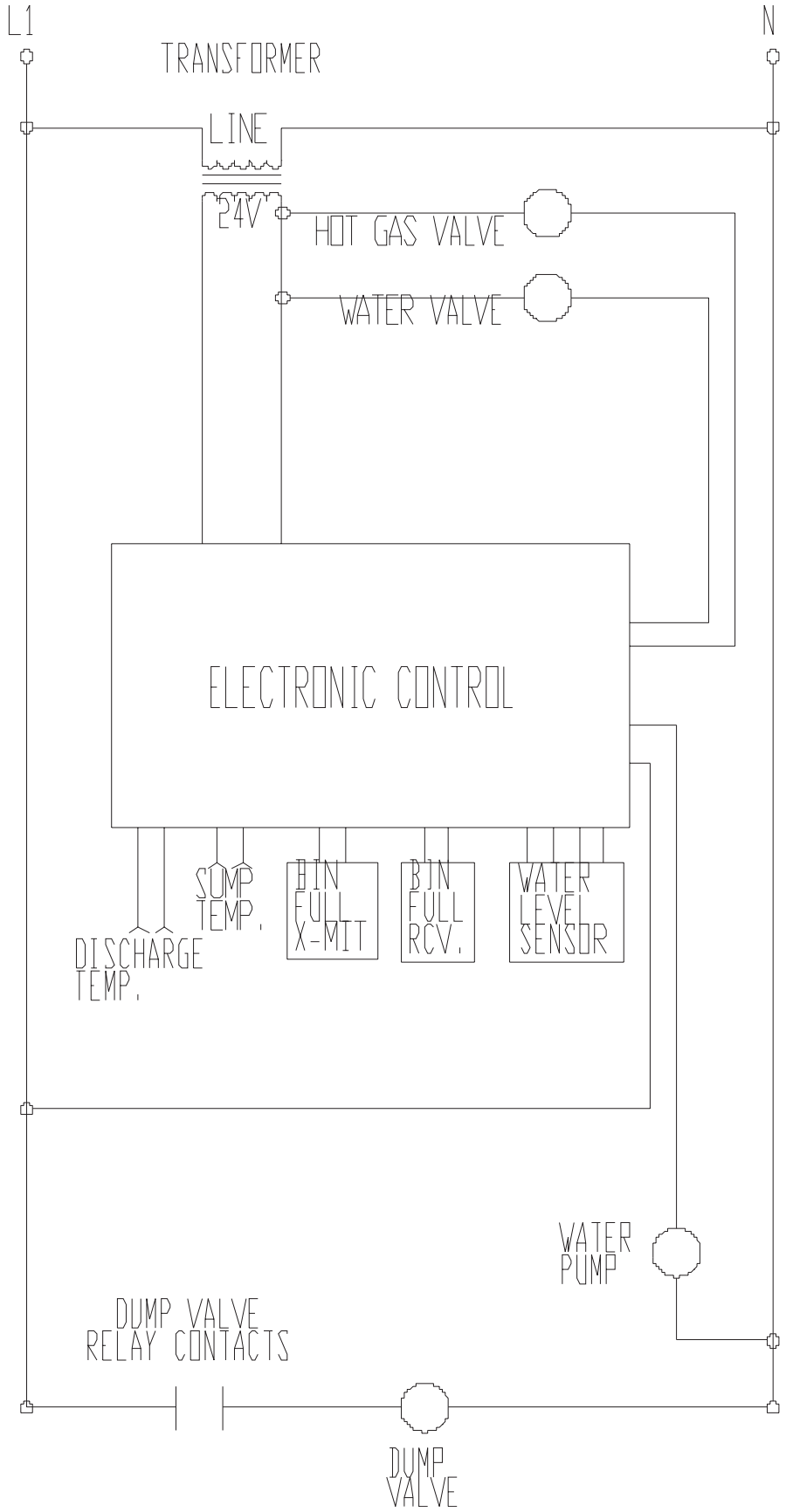

Eclipse 1300, 1600 Service Parts

CME1386 and CME1686 Wiring Diagram

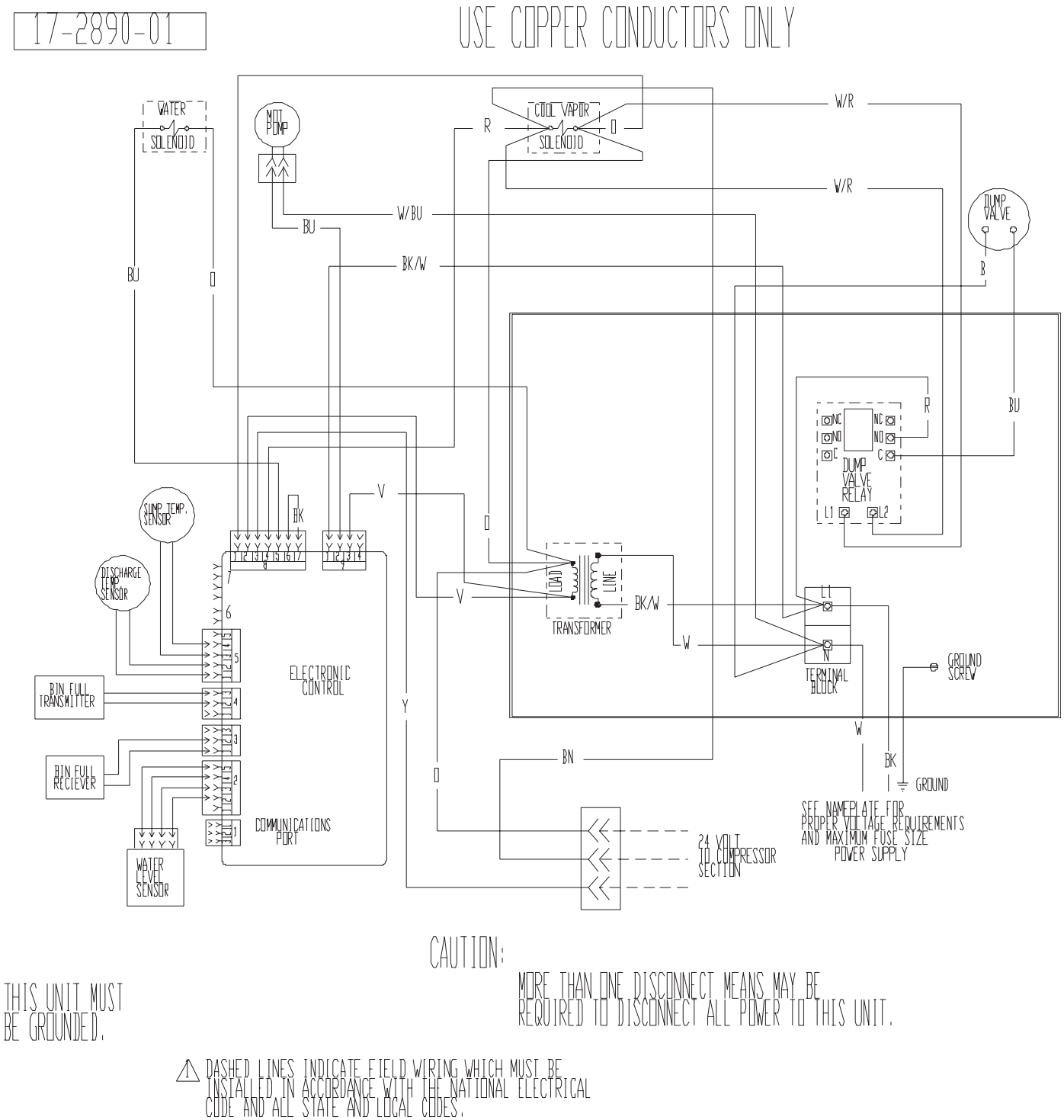

CAUTION:

MORE THAN ONE DISCONNECT MEANS MAY BE REQUIRED TO DISCONNECT ALL POWER TO THIS UNIT.

THIS UNIT MUST BE GROUNDED.

⚠ DASHED LINES INDICATE FIELD WIRING WHICH MUST BE INSTALLED IN ACCORDANCE WITH THE NATIONAL ELECTRICAL CODE AND ALL STATE AND LOCAL CODES.

Eclipse 1300, 1600 Service Parts

CP1316 Single Phase Schematic Diagram

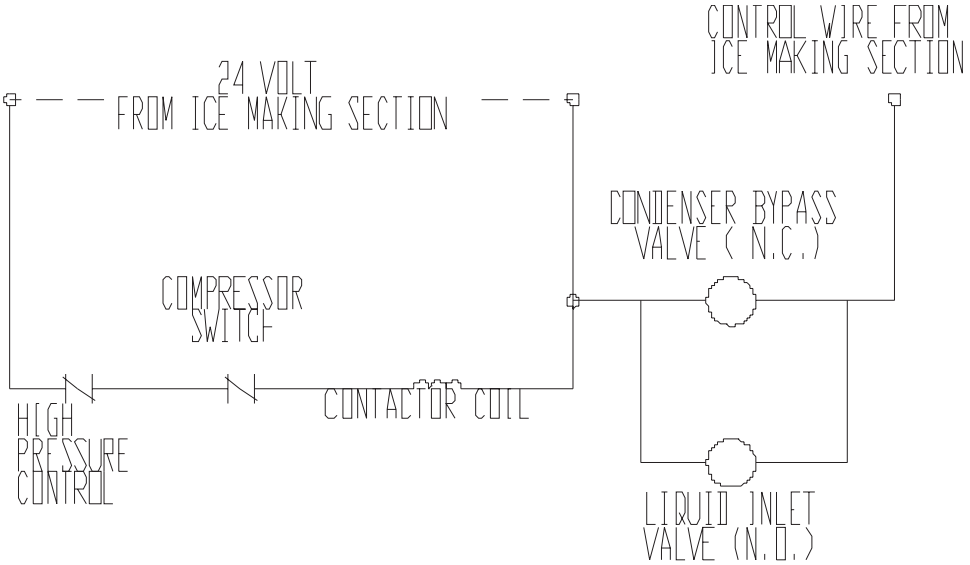

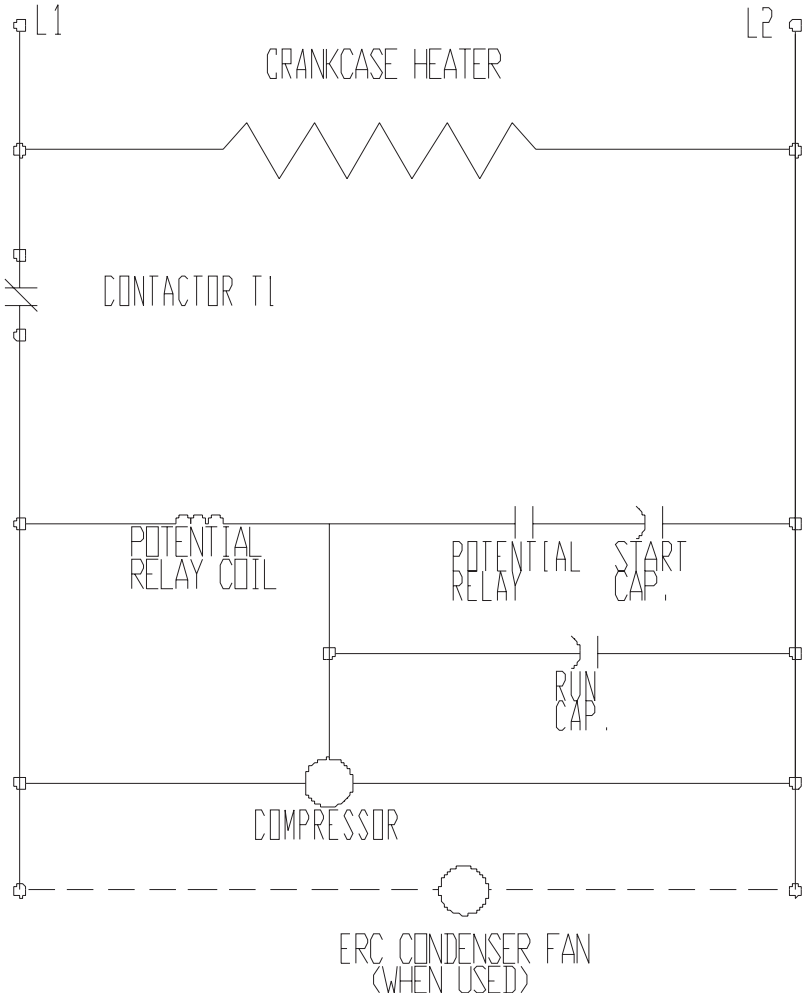

Eclipse 1300, 1600 Service Parts

CP1316 Single Phase Wiring Diagram

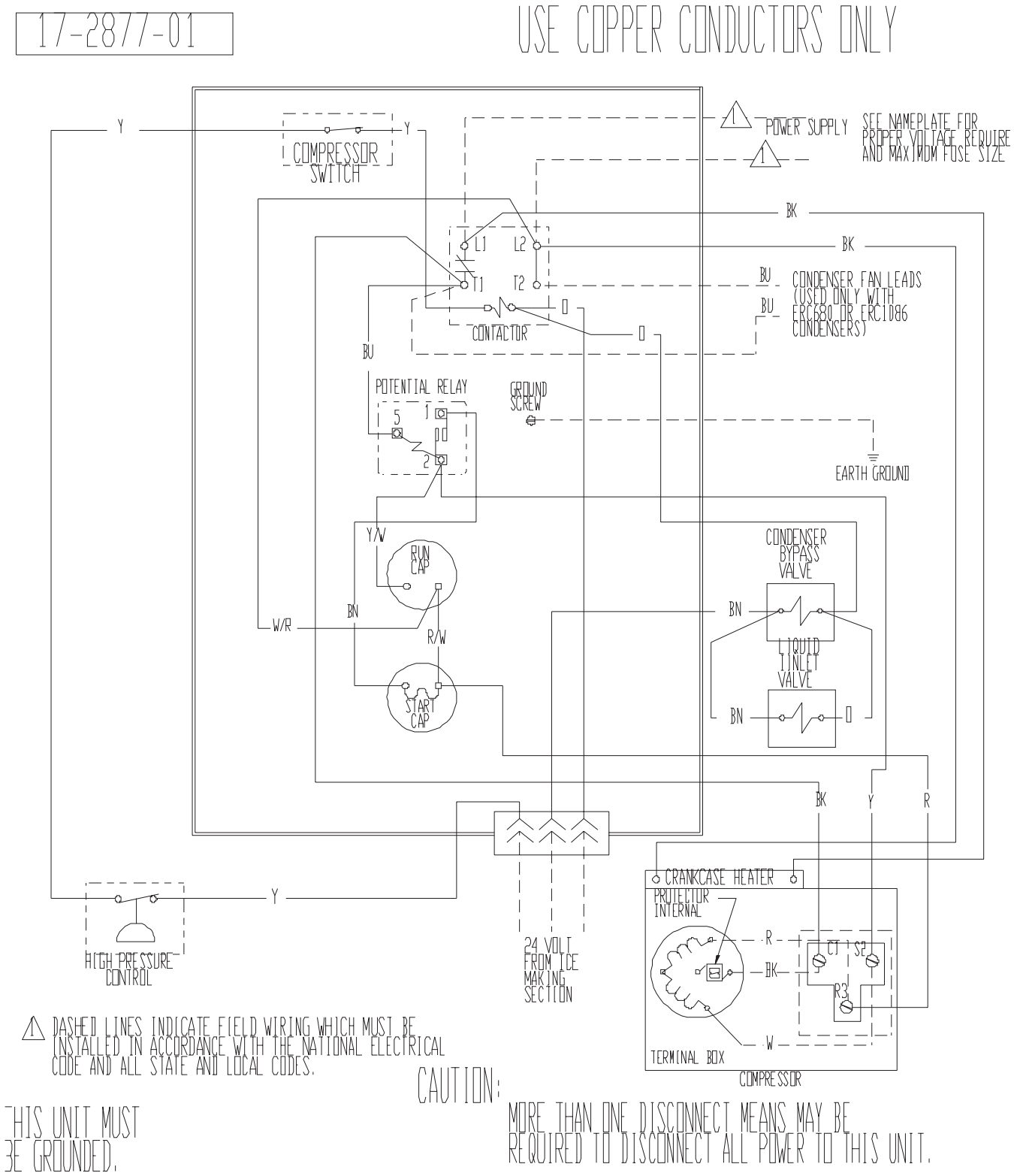

Eclipse 1300, 1600 Service Parts

CP1316 Three Phase Wiring Diagram

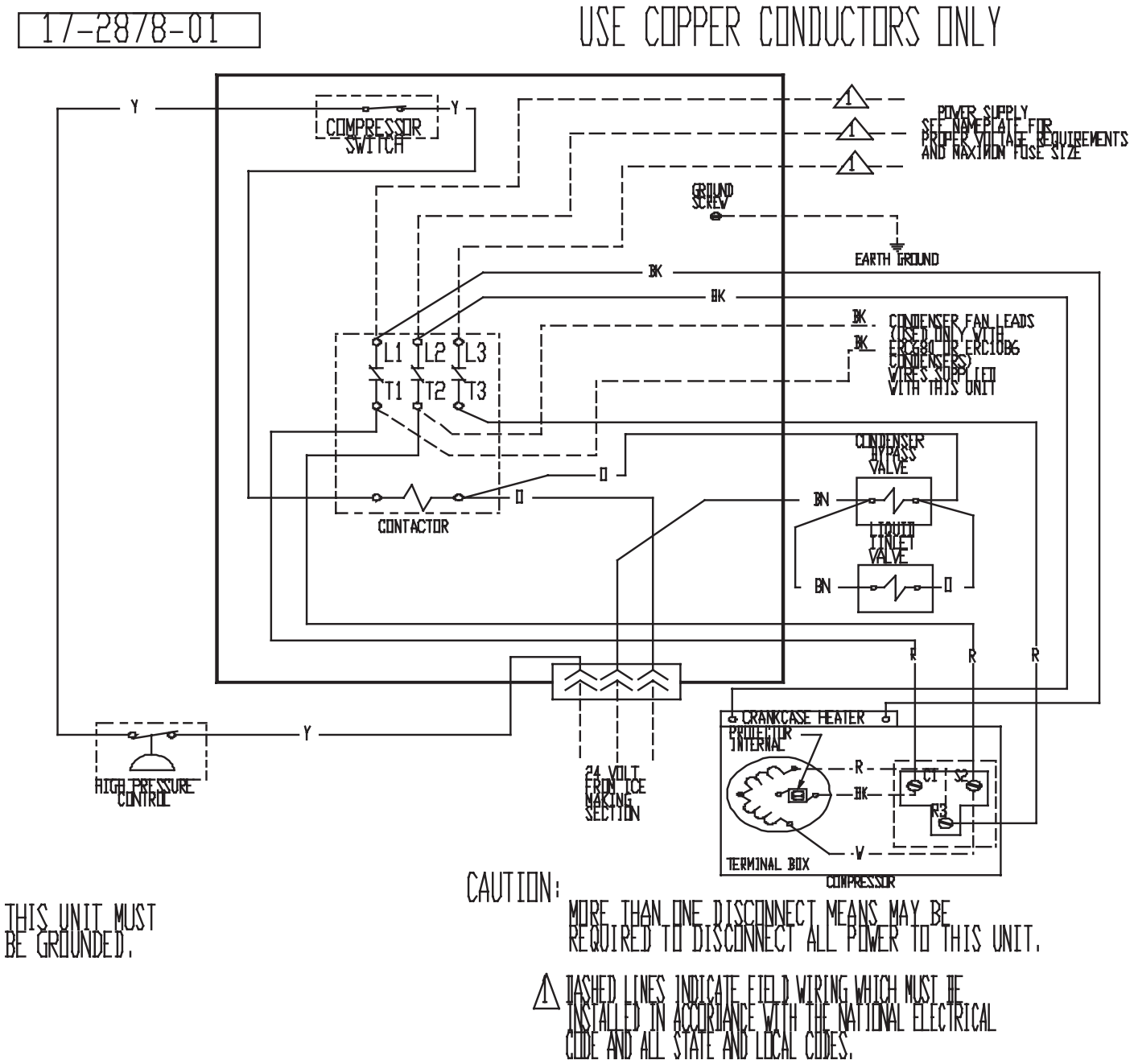

CAUTION:
MORE THAN ONE DISCONNECT MEANS MAY BE REQUIRED TO DISCONNECT ALL POWER TO THIS UNIT.

THIS UNIT MUST BE GROUNDED.

⚠ DASHED LINES INDICATE FIELD WIRING WHICH MUST BE INSTALLED IN ACCORDANCE WITH THE NATIONAL ELECTRICAL CODE AND ALL STATE AND LOCAL CODES.

Eclipse 1300, 1600 Service Parts
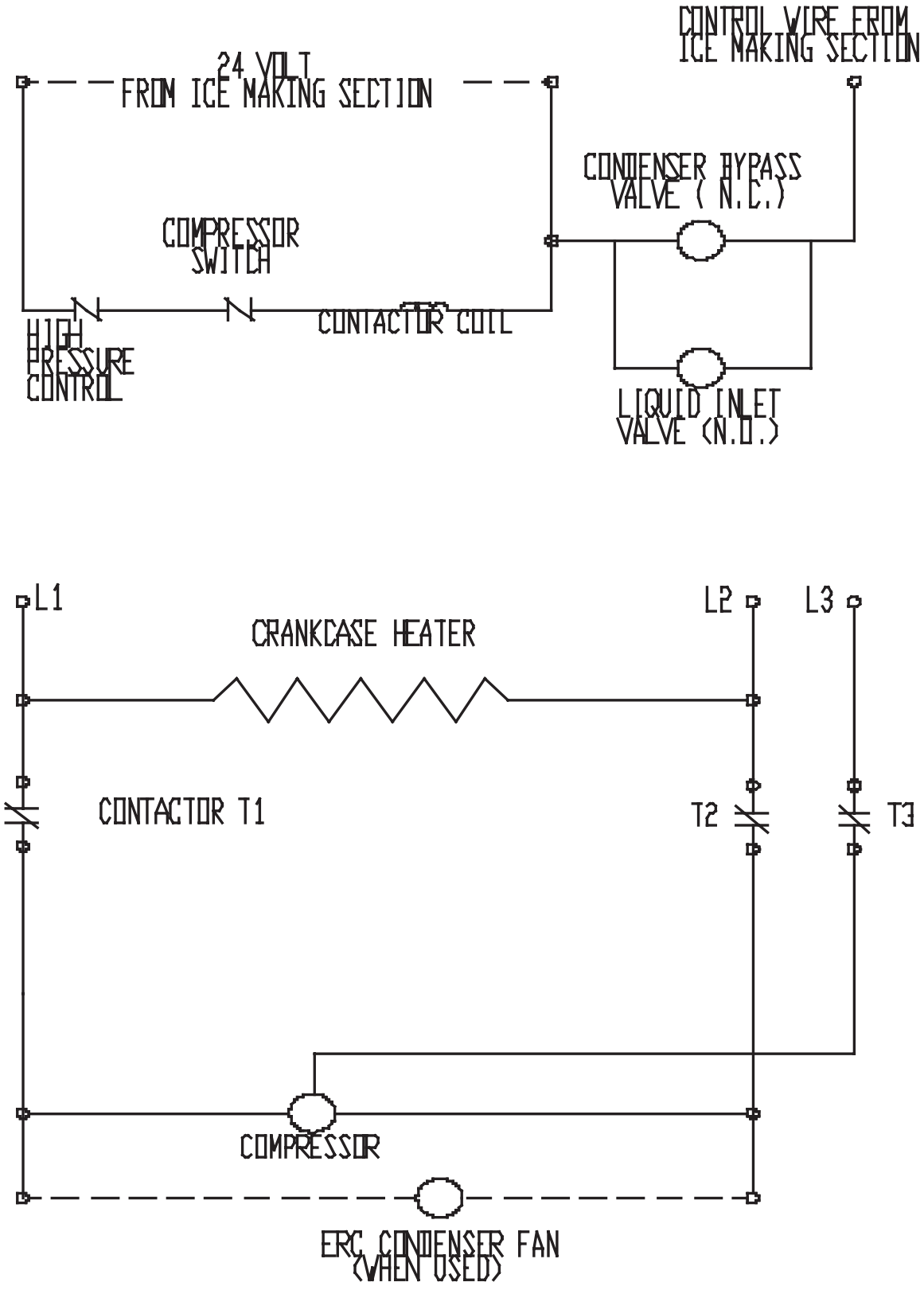
CP1316 Three Phase Schematic Diagram