Introduction:

This manual covers the assembly, installation, start up, operation and maintenance of the 1300 and 1600 remote low side cuber systems.

Table of Contents

Introduction: · · · · · · · · · · · · · · · · · · Page 1
Configuration: · · · · · · · · · · · · · · · · · · Page 2
Technical Specifications · · · · · · · · · · · · Page 3
Model Number Locations · · · · · · · · · · · · Page 4
Cabinet Drawings, Ice Making System · · · · Page 5
Cabinet Drawings, Compressor Package and Condensers · · · · · · · · · · · · · · · · · · Page 6
Proper Combinations: · · · · · · · · · · · · · · Page 7
Create the System · · · · · · · · · · · · · · · · Page 8
System Examples · · · · · · · · · · · · · · · · Page 9
System Examples · · · · · · · · · · · · · · · · Page 10
Place Remote System · · · · · · · · · · · · · · Page 11
System Location · · · · · · · · · · · · · · · · · Page 12
Route Tubing · · · · · · · · · · · · · · · · · · Page 13
Ice Making Section · · · · · · · · · · · · · · · Page 14
Compressor Package · · · · · · · · · · · · · · Page 15
Condensing Section Assembly · · · · · · · · Page 16
Condensing Section Assembly · · · · · · · · Page 17
Ice making section: · · · · · · · · · · · · · · · Page 18
Bin Thermostat - Routing · · · · · · · · · · · Page 19
Bin Thermostat - Bracket & Bulb · · · · · · · Page 20
Water and Drain · · · · · · · · · · · · · · · · · Page 21
Water and Drain · · · · · · · · · · · · · · · · · Page 22
Ice Making Section Set Up · · · · · · · · · · · Page 23
Coupling Connections: · · · · · · · · · · · · · Page 24
Condensing Unit Connections · · · · · · · · · Page 25
Final Placement · · · · · · · · · · · · · · · · · Page 26
Controller Operation · · · · · · · · · · · · · · Page 27
Initial Start Up - 1300 and 1600 · · · · · · · · Page 28
Purge Adjustment · · · · · · · · · · · · · · · · Page 29
System Operation: · · · · · · · · · · · · · · · Page 30
Refrigeration Details: · · · · · · · · · · · · · · Page 31
Technicians Only: Freeze Cycle Sequence of Operation · Page 32
Technicians Only: Harvest Cycle Sequence of Operation · Page 33
Power and Water Interruptions · · · · · · · · Page 34
Sanitation and Cleaning · · · · · · · · · · · · Page 35
Other Maintenance · · · · · · · · · · · · · · · Page 36
Water Distributors · · · · · · · · · · · · · · · · Page 37
Ice Sensors · · · · · · · · · · · · · · · · · · · Page 38
Water Level Sensor Maintenance · · · · · · · Page 39
Service Diagnosis · · · · · · · · · · · · · · · · Page 40
Service Diagnosis · · · · · · · · · · · · · · · · Page 41
Service Diagnosis · · · · · · · · · · · · · · · · Page 42
Controller Features & Last Error Recall · · · · Page 43
Operational Characteristics 1300 lb system · · Page 44
Operational Characteristics 1600 lb system · · Page 45
Refrigeration System Service · · · · · · · · · Page 46

An illustrated parts list and wiring diagram is in the center of this manual.

Keep this manual for future reference.

⚠WARNING

Note this symbol when it appears. It indicates a potential hazard.

Eclipse™ 1300, 1600

Configuration:

A remote low side cuber system includes several sub systems: an ice making section, a remote compressor package, and a remote air cooled condenser. Additionally, there are two models of each sub-system and this manual covers all of them.

The ice making sections are designed for use indoors in a controlled environment. The remote compressor packages and condensers are designed to operate outdoors. Each sub-system has limits for power, water and temperature.

Operational Limitations:

	Minimum	Maximum
Air Temp (IMS)	50°F	100°F.
Air Temp (CU)	-20°F.	120°F.
Water Temp	40°F.	100°F.
Water Pressure	20 psi	80 psi
Voltage (IMS)	104	126
Voltage (CU)	198	253

IMS = Ice Making Section, CU= Condensing Unit

Do Not operate the machine in conditions beyond these limitations. Doing so will void the warranty.

Scotsman ice systems are designed and manufactured with the highest regard for safety and performance. They meet or exceed the standards of UL and NSF.

Scotsman assumes no liability of responsibility of any kind for products manufactured by Scotsman that have been altered in any way, including the use of any part and/or other components not specifically approved by Scotsman.

Scotsman reserves the right to make design changes and/or improvements at any time.

Specifications and design are subject to change without notice.

Warranty

Refer to the warranty coverage in effect when the equipment was sold. Warranty statements are included with each product.

Systems:

Each sub-system is a separate entity that carries its own model and serial number. They must be combined to create a remote cuber low side system.

System Information

System Model Number	Condensing Unit (CU)				Ice Making Section (IMS)	
	Compressor Package		Condenser			
	Model	Electrical	Model	Electrical	Model	Electrical
Eclipse 1300-42	CP1316-32A	208-230/60/1	ERC1086 -32A	208-230/60/1	CME1386RLS-1A	115/60/1
Eclipse 1300-43	CP1316-3A	208-230/60/3				
Eclipse 1600-42	CP1316-32A	208-230/60/1	ERC1086-32A	208-230/60/1	CME1686RLS-1A	115/60/1
Eclipse 1600-43	CP1316-3A	208-230/60/3				

Notes: Voltage Codes are at the end of the model number. Codes read Voltage/Hertz/Phase. Those related to these products include:

-1 = 115/60/1

-3 = 208-230/60/3

-32 = 208-230/60/1

-42 = 115/60/1 and 208-230/60/1 (separate units)

-43 = 115/60/1 and 208-230/60/3 (separate units)

Pre-charged tubing kits are required to interconnect the IMS to the CP.

Interconnecting 24 volt control wire ships with the CP unit.

Technical Specifications

Ice Making Section (IMS)

Model	Voltage	Minimum Circuit Ampacity	Max Fuse Size	Cabinet Size	Weight (lb)
CME1386RLS-1A	115/60/1	3	15	30”w x 24”d x 28”h	144
CME1686RLS-1A	115/60/1	3	15	same	154

Compressor Package (CP)

Model	Voltage	Contains Headmaster?	Minimum Circuit Ampacity	Max Fuse Size	Refrigerant Charge (R-404A)*	Cabinet Size	Weight (lb)
CP1316-32A	208-230/60/1	Yes	24.3	30	18 lb	29 ¾” w x 18”d x 34 ½” h	180
CP1316-3A	208-230/60/3	Yes	15.3	20	18 lb	same	180

* Includes entire system charge.

Condenser

Model	Voltage	Contains Headmaster?	Number of Circuits	Minimum Circuit Ampacity**	Max Fuse Size**	Cabinet Size, with legs	Weight (lb)
ERC1086-32A	208-230/60/1	No	1	1.25	15	29 ¾”w x 28 5/8”d x 38 ½”h	95

* * ERC condenser fan motor is powered from CP unit and the ERC’s ampacity is included in CP unit numbers.

Note: The ERC1086 does NOT contain a headmaster. The headmaster is in the CP units.

Note: 75 feet of interconnecting control wire (24 volt) is included with the CP units.

Model Number Locations

Ice Making Section

The dataplate on the back of the ice machine contains the model number, serial number and electrical data.

A second plate, located behind the front panel at the lower left front, also lists the model and serial numbers.

Compressor Package

The dataplate on the right side of the compressor package contains the model number, serial number, electrical data and system refrigerant charge.

A second plate, located behind the front panel in front of the compressor, also lists the model number, serial number and refrigerant charge.

Condenser

The dataplate lists the condenser's electrical information plus the model and serial numbers.

On the ERC1086 it is located on the side opposite the refrigeration connections.

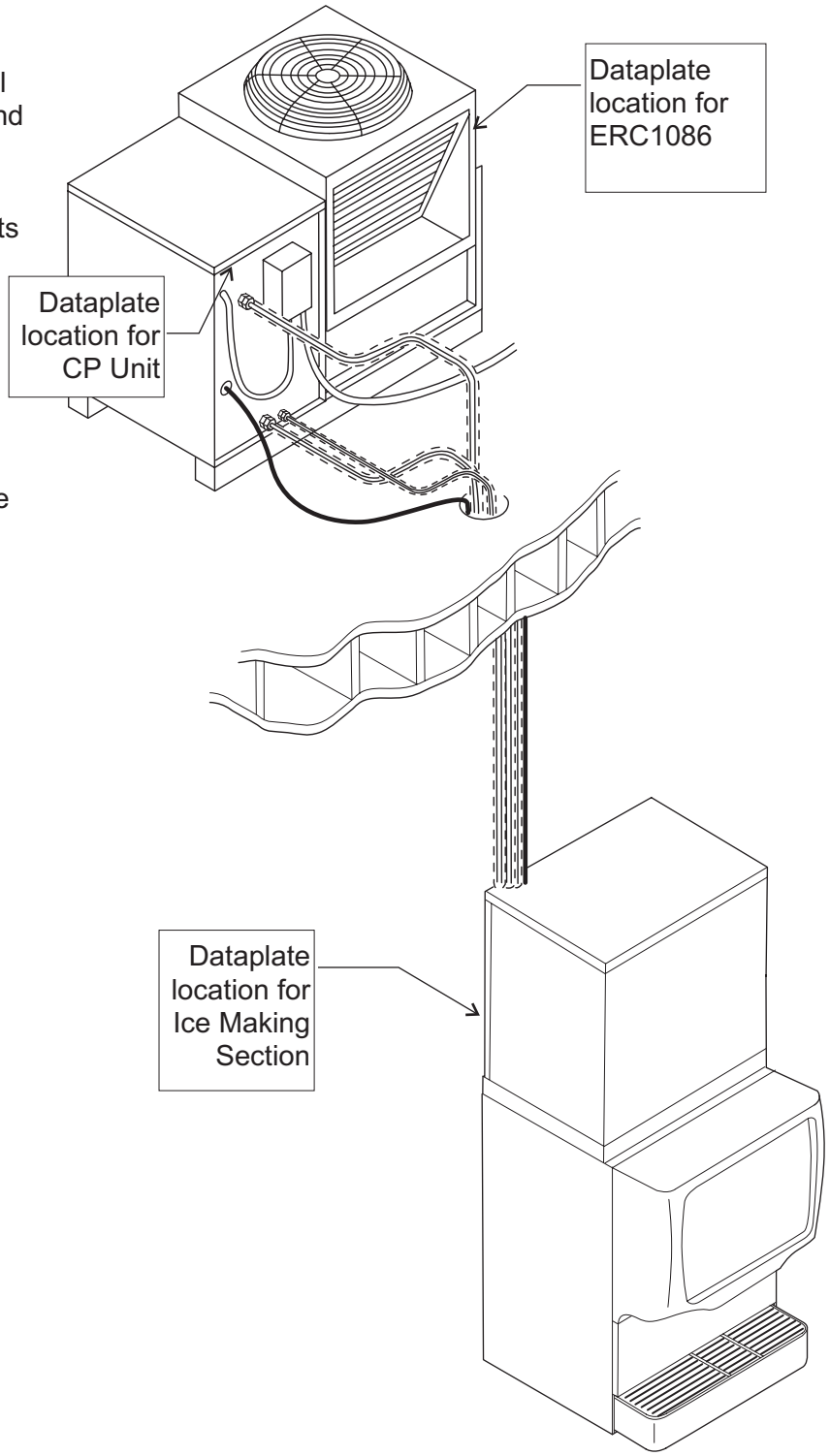

Cabinet Drawings, Ice Making System

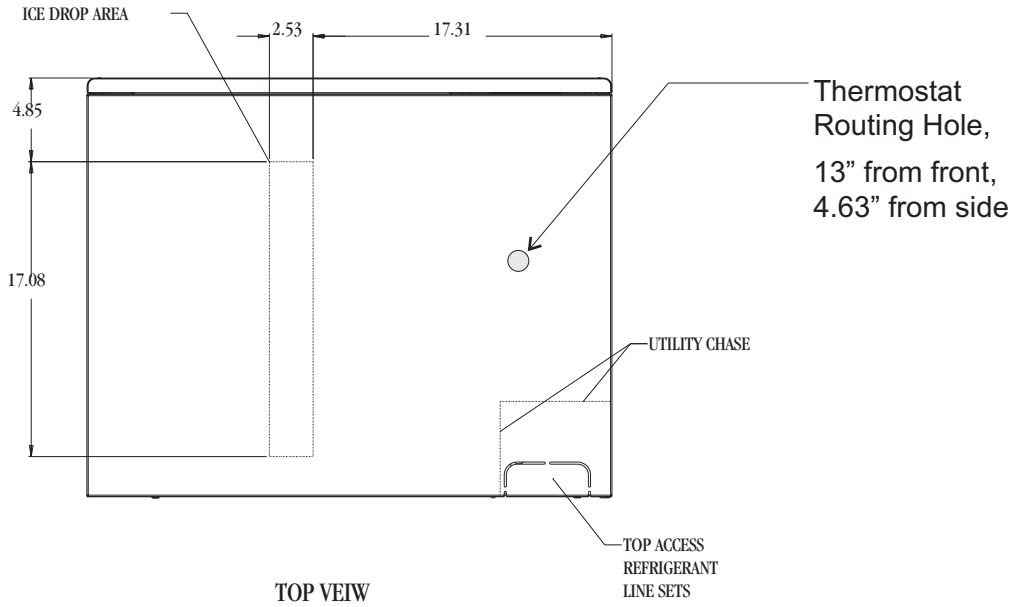

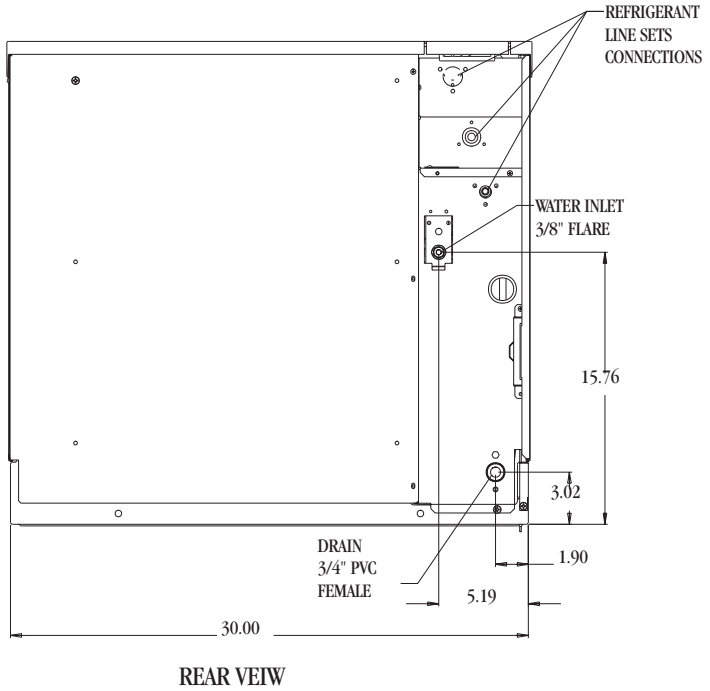

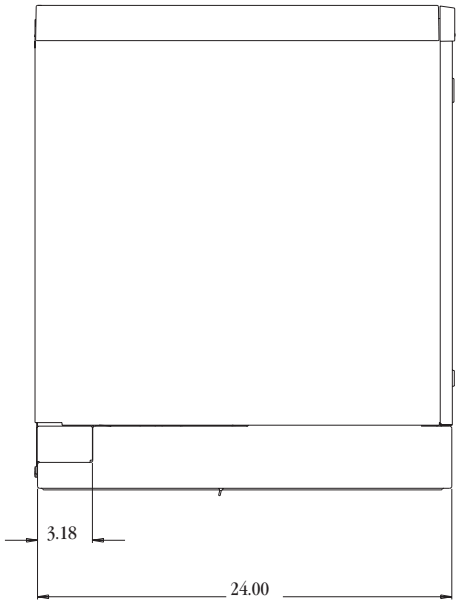

Eclipse™ 1300, 1600

Cabinet Drawings, Compressor Package and Condensers

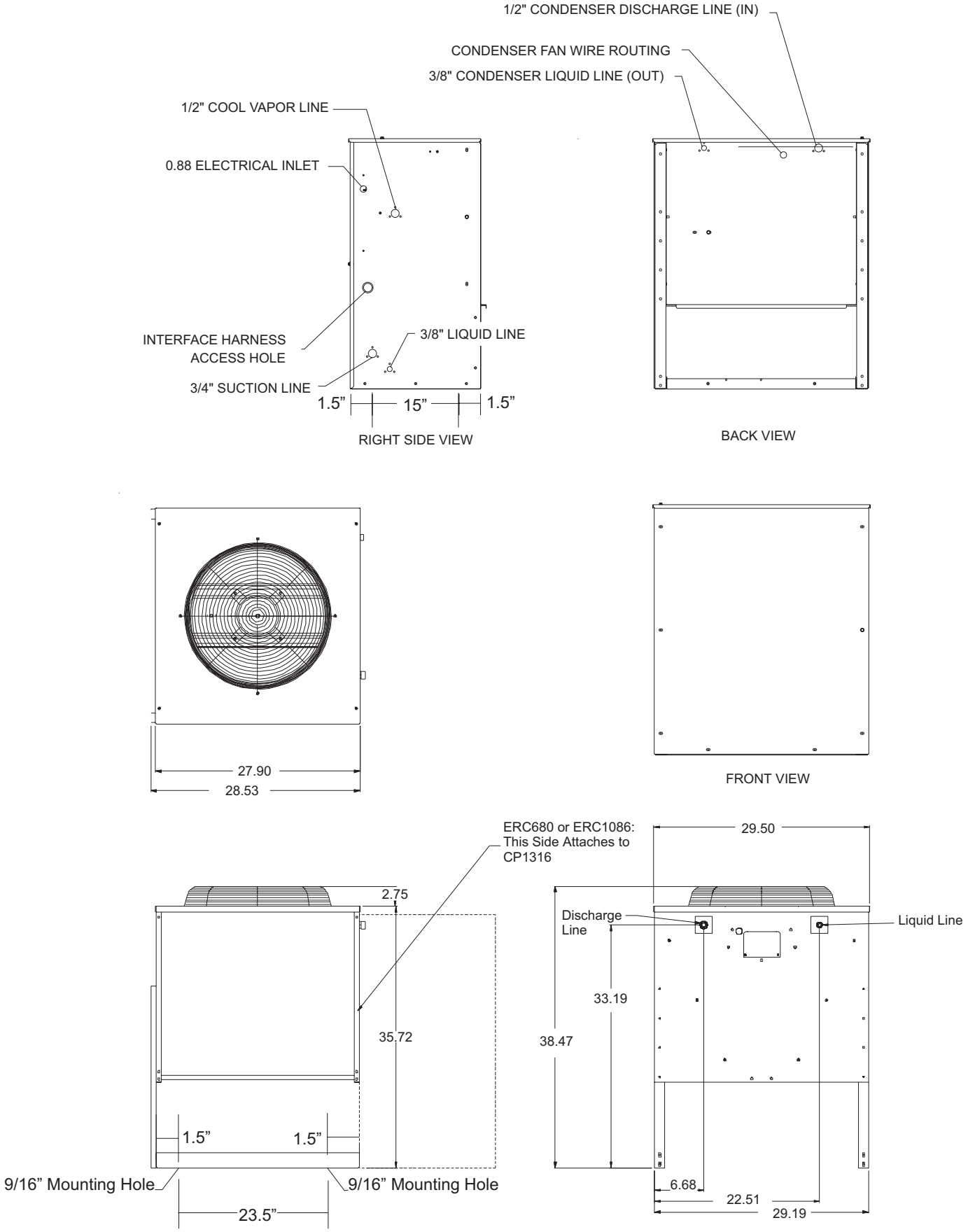

Proper Combinations:

The three sub systems are designed to be connected together in certain combinations to meet the user's needs:

Eclipse 1300 System:

- CME1386, CP1316, ERC1086

Eclipse 1600 System:

- CME1686, CP1316, ERC1086

ERC1086 may be substituted for by an approved central condenser coil & fan (coil must be without headmaster - headmaster is part of CP1316).

Condenser coil internal volume target is 165 cubic inches, BHTU target is 42,000 BTUH.

Note: The ice making section cannot be stacked vertically.

Accessories such as bin adapters and tubing kits are required to complete the installation.

Dispenser Adapter Kits:

- Scotsman ID200 or ID250: **KBT44**

Note: Dispensers with two rotors. If possible, the ice making head should NOT be centered left to right between the two rotors. It should be shifted slightly to one side, and the agitation should be minimized.

Bin Adapter Kits:

- BH800: KBT23
- BH801: KBT29
- BH900: KBT22

Tubing Kits:

- 20 foot: **3RTE20**
- 35 foot: **3RTE35**
- 50 foot: **3RTE50**
- 75 foot: **3RTE75**
- Suction Line Trap: **KSLT075**
- Interconnecting Tubing to Approved Rack Condenser Coil: **RTE10**
- Line end kit: **KTE6**

Items required for installation:

- Ice making section
- Compressor Package (includes interconnecting control system wire)
- Remote condenser **or** approved rack coil w/tubing kit
- 20', 35', 50' or 75' triple line set (liquid, vapor and suction)
- Bin or dispenser adapter

Special Considerations

The ice making section's footprint is 30" wide by 24" deep. The refrigeration connections can be made out the top panel or out the back. The electrical power cord and the water inlet line can also be routed through either of those areas. The drain may be routed out the back or to the left side.

The bin thermostat, when deployed, will be about 5" below the bottom of the cabinet, and that is where the ice will fill to. This ice level maximizes ice storage without overfilling the bin or dispenser.

Water

Pure water does not exist. All water supplies contain some amounts of impurities, although potable water is, by definition, fit for human consumption. Because the contents of the water to an ice machine directly impact its performance, consideration should be given to improving the water's quality.

There are two ways water can contain impurities: in suspension or in solution. Suspended solids can be filtered out of the water. In solution or dissolved solids must be diluted or treated. Water filters are recommended to remove the suspended solids. Some filters or filter systems have treatment chemicals in them for treating the suspended solids.

This ice machine has an adjustment for the amount of water rinsed or purged. Water use adjustments are customer convenience adjustments; they are not factory defects and are not covered by warranty.

Create the System

Plan the installation. The system consists of four parts: the ice making section, the compressor package, the interconnecting tubing and the remote condenser. Of these, the biggest variable is the interconnecting tubing.

Tubing: The tubing consists of three pre-charged, insulated and sealed soft copper tubes. They each contain a small holding charge of R-404A. One tube, the liquid line, is 3/8” OD. The vapor tube is ½” OD and the suction tube is ¾” OD. A site inspection will determine what length of tubing is required for the installation.

Excess tubing must be either shortened at the job site (recovering the holding charge, purging with nitrogen when brazing and evacuating to 50 microns) or coiled up inside the building.

Installations with greater than 20 feet of vertical lift between ice machine and the compressor require a suction line trap. The suction line requires careful handling and large radius bends to prevent kinking.

Roof mounting: To make installation easier the compressor and condenser are designed to be assembled together on the roof. Some installations will require the use of a hoist to lift the components to the roof.

Pad mounting: The compressor and condenser may be located below the ice making section, up to a limit of 15 feet.

Distance from unit: Limited to the length of the available pre-charged tubing.

Elevation: CP unit limited to 35 feet above the ice making section.

Compressor package: Electrical power must be supplied to the compressor package. The remote condenser fan motor takes its power from the compressor package.

Ice making section location and attachment: The 115/60 Hz ice making section is cord connected and requires an outlet within 6 feet of the installation.

Interconnecting wires: An interconnecting wire harness is included with the CP unit. One end plugs into the ice making section and the other into the compressor package. The system will NOT operate without this harness.

Exposed tubing: Minimize the amount of tubing exposed outdoors.

Confirm Component Availability:

- CME1386 or CME1686
- CP1316
- ERC1086 unless connecting to an approved condenser coil.

Note: Only these condensers may be used. They do NOT contain a headmaster valve. That valve is in the Compressor Package. **Do NOT use any other Scotsman condenser.** Do NOT use these condensers on any other Scotsman remote product.

- Interconnecting tubing kit

Note: Check tubing integrity before assembly by attaching a refrigeration compound gauge onto one of each tube’s schrader valves. If there is pressure, the tube is OK, if not it should be checked for damage and leaks.

- Bin or dispenser adapter

System Examples

The Eclipse system can be installed on a bin or dispenser. The CP unit can be installed on either a single circuit condenser or onto a coil in a separate rack condenser.

Separate coils must be:

- Scotsman approved
- The correct size and capacity
- New or not have been part of a system that used mineral oil.

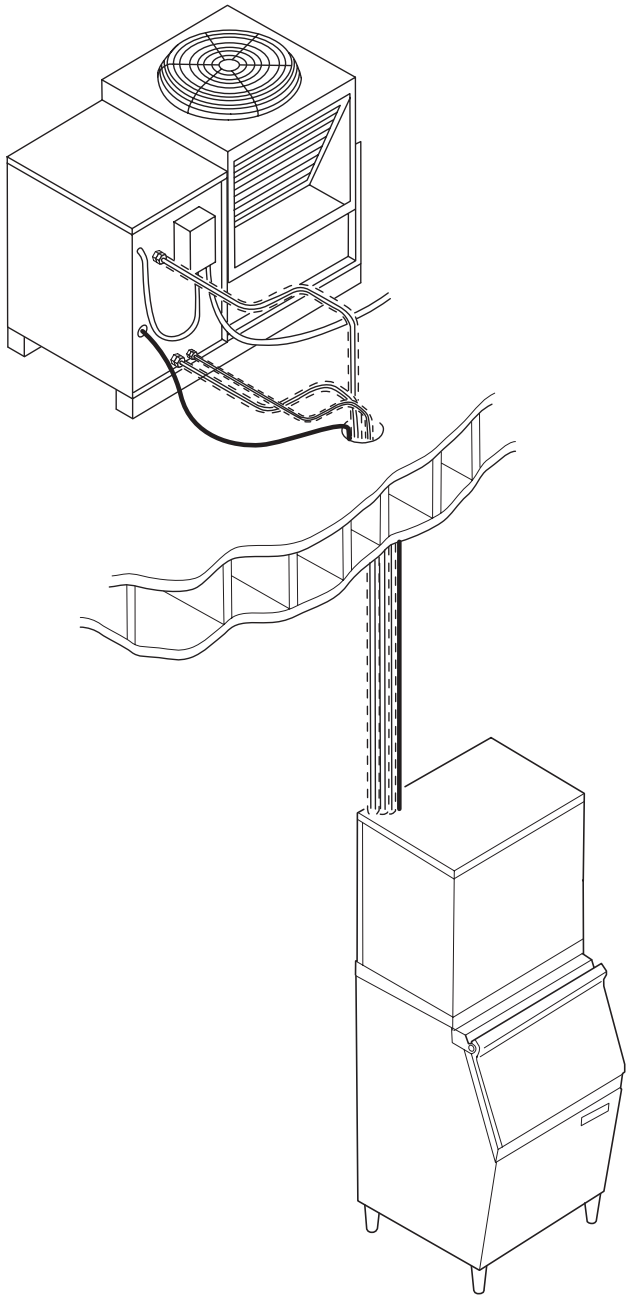

System on Ice Storage Bin

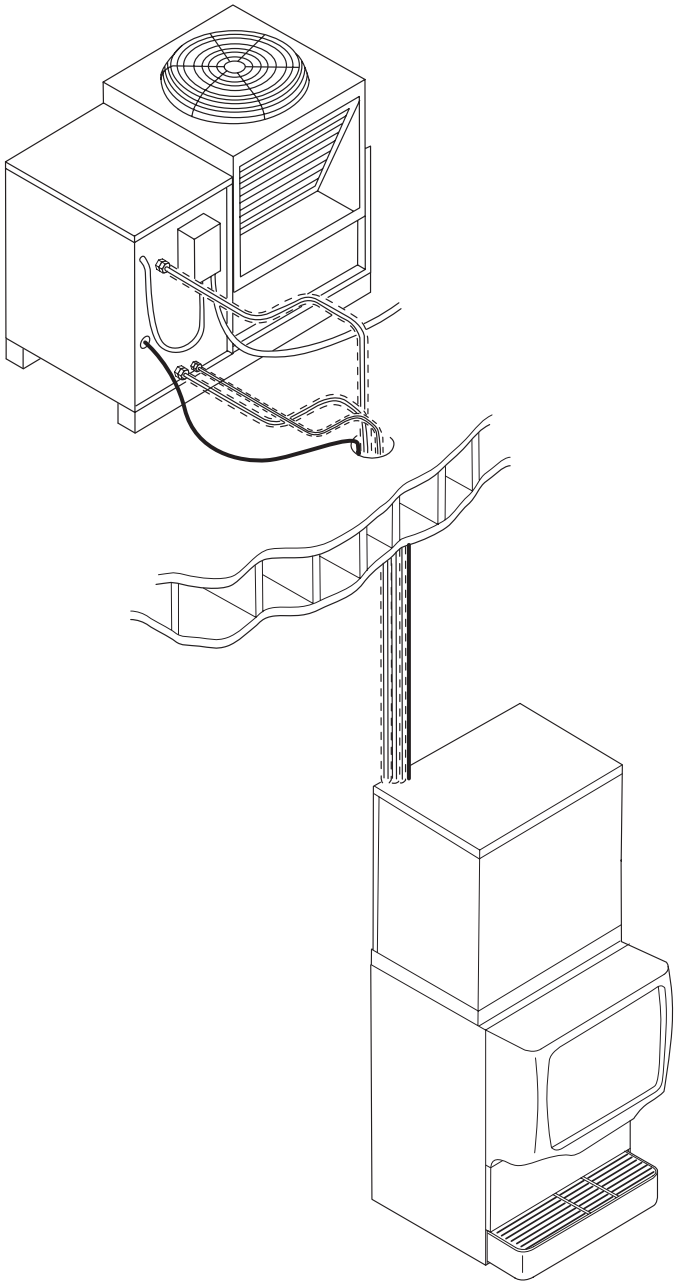

System on Ice Dispenser

System Examples

A variation of the typical system set up is one that uses a non-Scotsman condenser. In that case the CP unit is NOT bolted to the condenser and a RTE10 line set is used to connect the refrigeration system to the condenser's coil.

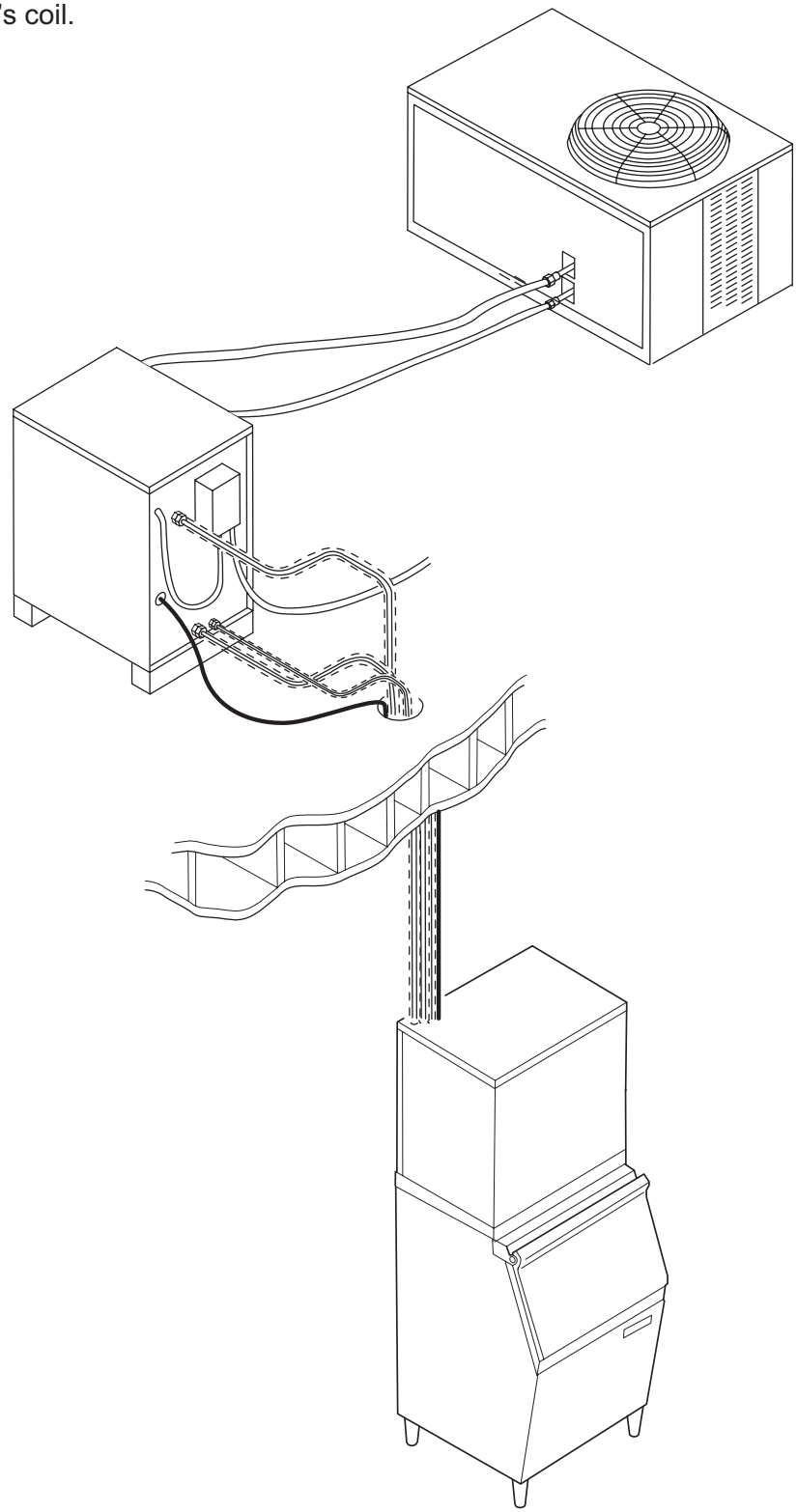

IMS on Bin, CP Unit Connected to Approved Central Condenser Coil

Place Remote System

Roof preparation

Most installations of this system will place the compressor package and condenser on the roof of a building. The roof must be physically stout enough to accept the load of the equipment and the roofing material must be prepared to prevent water leaks.

Follow local codes for the placement and attachment of the equipment.

Location

The air cooled condensing unit assembly requires unobstructed air flow to operate efficiently. A four foot space between each intake side and a wall or other cabinet is recommended. Provide at least 2 feet of space above the air cooled condenser for proper air flow.

Do not place where the air cooled condenser will pick up hot discharged air from an air conditioner or other refrigeration system condensing unit.

Space must also be reserved for service on the compressor package.

Roof Piercing:

The roof (or wall) must have a passage large enough for the three pre-charged, pre-bent tubes and the control wire to pass through. The minimum recommended size is 4” ID. In most areas the power supply may also pass through the same passage. If there isn’t a passage one must be created. In most cases this must be done by a licensed and bonded roofer in order to maintain the roof’s integrity.

Suggestions:

Hoist the compressor package and condenser to the roof in separate loads.

Note: In most cases a mechanical lift, boom truck or crane will be required to hoist the condensing unit components.

Assemble the compressor package to the condenser and mount both to either roof rails or pressure treated 4 x 4s.

Orient the assembled unit so that the unit’s mounts are parallel to the pitch of the roof to allow water to drain freely.

Do NOT place the unit directly onto roof rock.

System Location

Limitations:

Distance: Limited to the maximum length of a single pre-charged tubing kit, 75 feet.

Condensing Unit Elevation over Ice Making Section: 35 feet.

Note: Elevations greater than 20 feet require installation of a suction line trap at the 20 foot mark.

Ice Making Section Elevation over Condensing Unit: 15 feet.

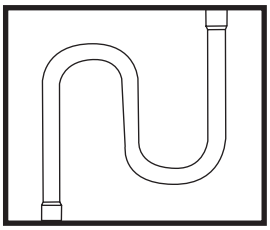

S-Trap

Line Routing:

- Allowed: One rise after a drop.
- Allowed: One drop after a rise.
- Not Allowed: More than one rise after a drop
- Not Allowed: More than one drop after a rise.

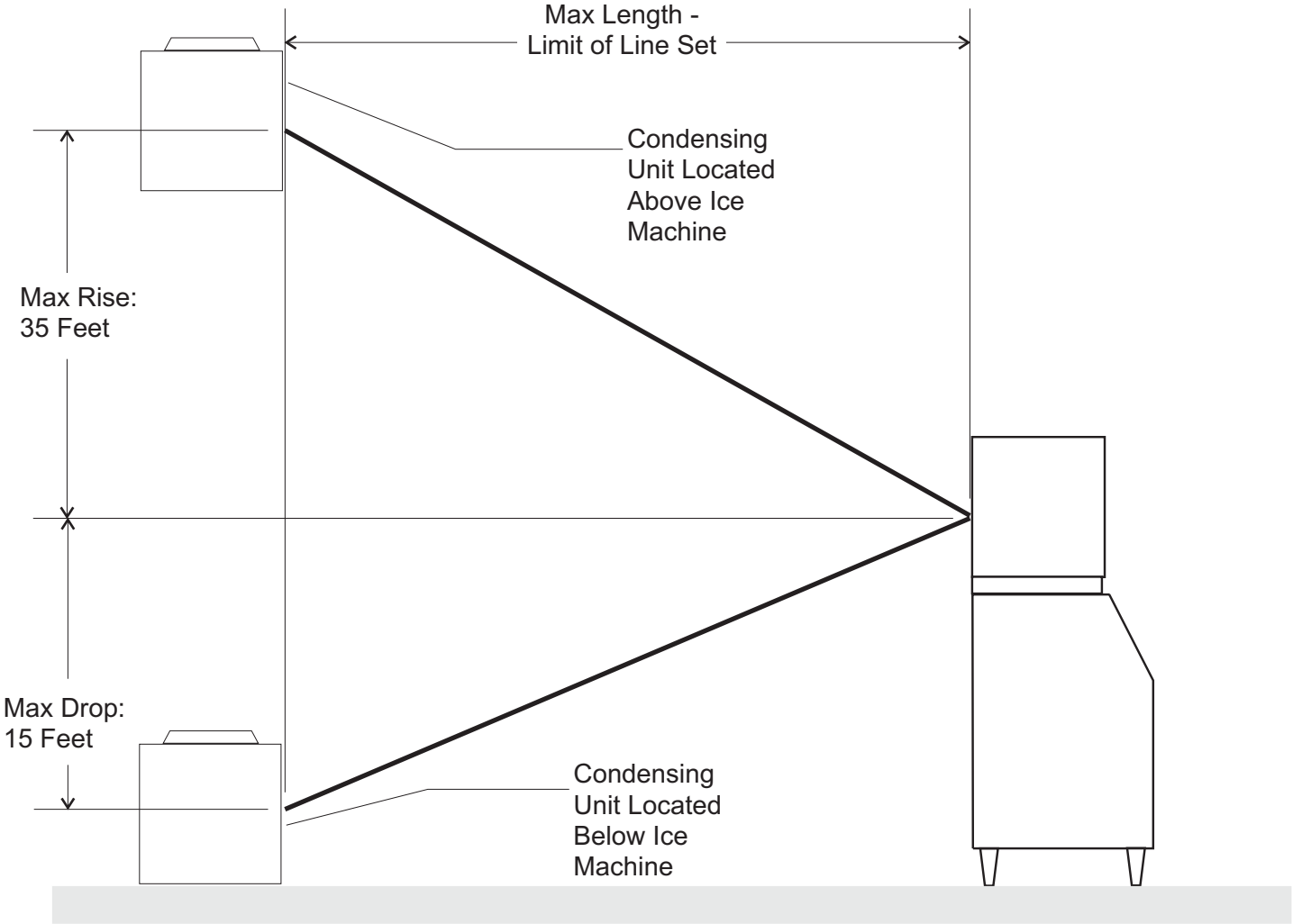

Condensing Unit Distance Schematic

Route Tubing

Scotsman's pre-charged tubing kits are pre-bent to fit the connection path at the ice making section.

- If the tubing is to be routed out the **back**, use the **double-bend** ends.

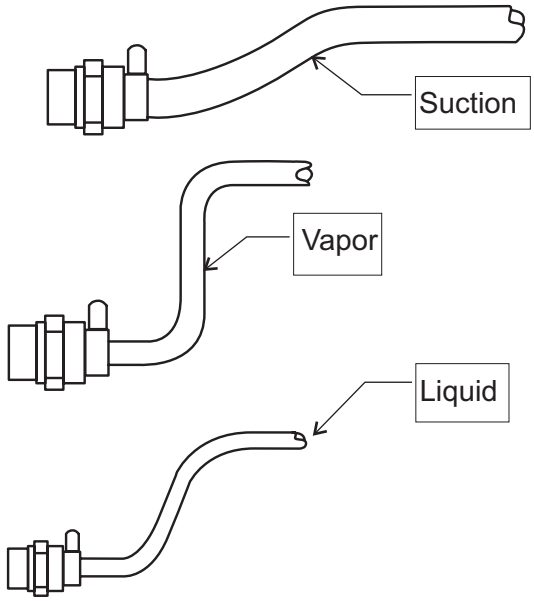

- If the tubing is to be routed out the back and then up, use the ends with the **single 90 degree bends.**

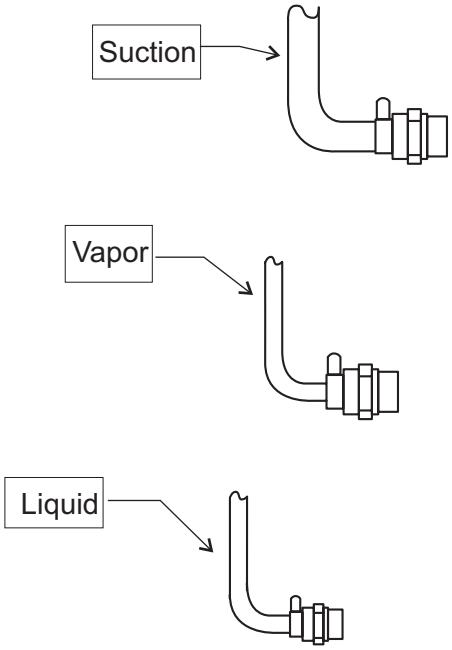

Note: Units mounted flush against the wall require refrigerant connections out the top, water supply in from the top, power supply routed through the top and drain routed to the left side.

Select the correct end to send to the roof.

The method or technique used to route the tube is left to the installer. However, in many cases it is easier to position the tubing inside the building first, then feed the outside portion through the tubing passage (pitch pot). Installation of tubing will be easier if the suction line is run first, followed by the liquid and vapor lines. Use of two persons is suggested to prevent kinking of the tubing, long runs may require three people.

- Allow enough tubing to make large radius bends from the roof passage to the compressor unit. Do NOT leave excess tubing on the roof.
- If a trap must be installed, the suction line tubing must be cut apart to install it.
- Identify the ice machine end of the tubing. Each tube has one end formed to route through the hole in the unit's top.
- Tape the ends of the vapor and liquid line tubes together along with the interconnecting wire. Extend the end of the interconnecting wire about 2 feet beyond the end of the precharged tubes and then tape it back onto the tubes.
- Route the three tubes and the wire from the roof, or other entrance, to the ice making section's planned position. Avoid uncoiling and recoiling the tubing, as that can lead to kinks.
- Support long runs of tubing with hangers.
- Repair any tears in the tubing insulation, especially those on the suction line that are inside the building.

Shortening Tubing

The precharged tubing kits are available in a variety of lengths, they should only be shortened if absolutely necessary.

To Shorten Tubes:

1. Recover the 3 ounce R-404A holding charge from each tube.

2. Cut out the required length of tubing, do not cut the tubing right at the quick connects.

3. Attach nitrogen bottle to one quick connect and a hose with a depressor to the other end, purge nitrogen through each tube while brazing.

4. Remove nitrogen, evacuate to 200 microns.

Note: If tubes are connected to the IMS, evacuate the vapor & suction lines to get the entire system.

Ice Making Section

The CME1386 and CME1686 are similar in layout. They differ in evaporator count, controller, float stem and vapor inlet valve.

Major Components:

TXV - one feeding a refrigerant distributor

Water Pump - same for both models

Water Level Sensor - signals reservoir water level to the controller

Controller - operates both the ice machine section and the compressor unit.

Drain Valve - opens to allow pump to drain the reservoir

Water Inlet Valve - 2.77 GPM solenoid valve that opens to fill the reservoir

Low Side Access Valve - allows connection for diagnosis of ice machine section refrigeration operation. Not for recovery.

Liquid, Vapor and Suction Connections - where the pre-charged tubing kits connect to.

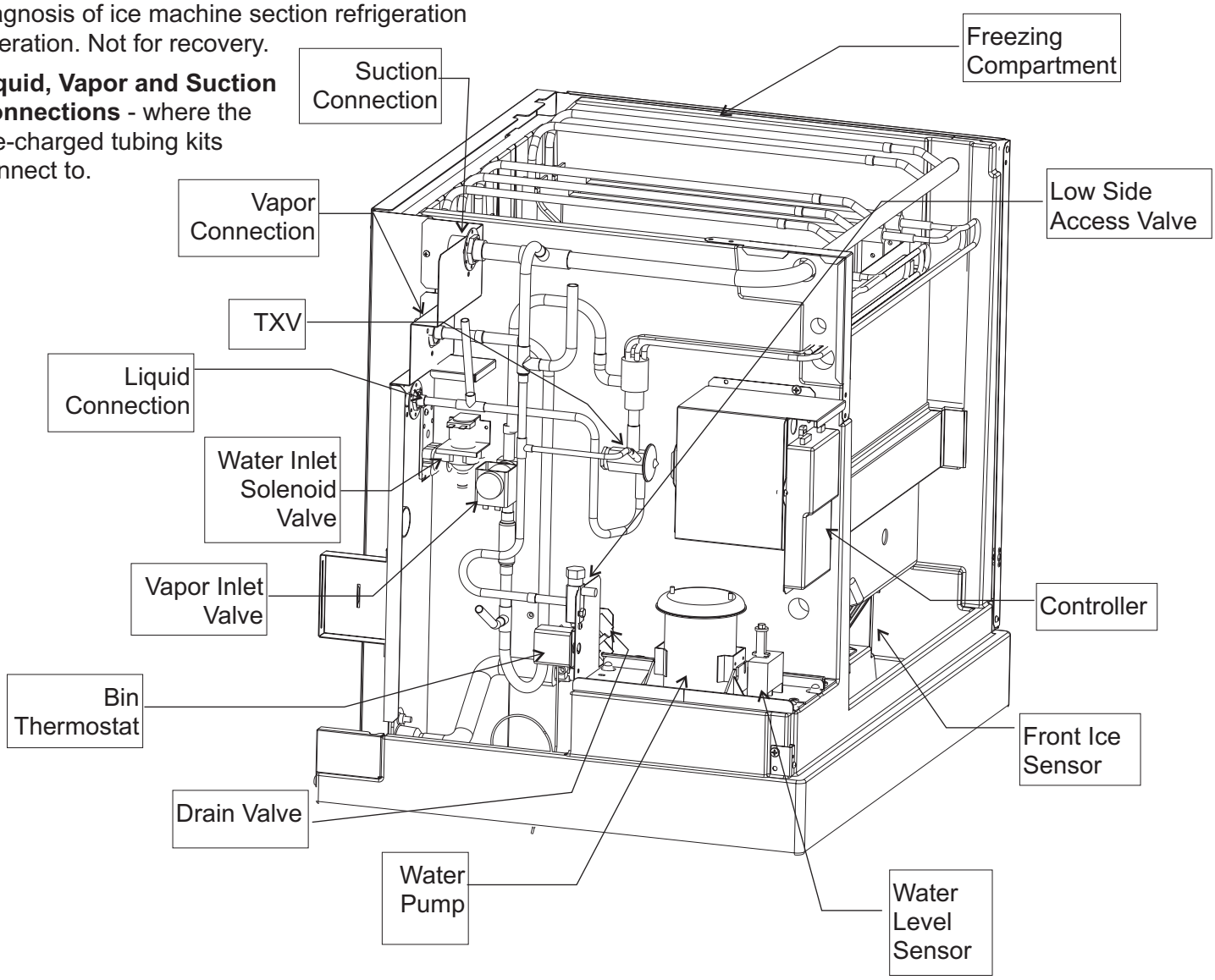

Compressor Package

Both compressor packages are similar in layout, they only differ in compressor and charge.

Major Components:

CPR Valve - limits refrigeration pressures inside the dome of the compressor.

Condenser By Pass Valve - opens during harvest to allow discharge gas to flow to the vapor line.

Headmaster - maintains a minimum discharge pressure during freeze

Liquid Inlet Valve - Normally Open, closes during harvest.

Receiver - stores liquid refrigerant for freeze and provides vapor for harvest

Suction Access Valve - provides a place to attach a refrigeration manifold for diagnostics and recovery.

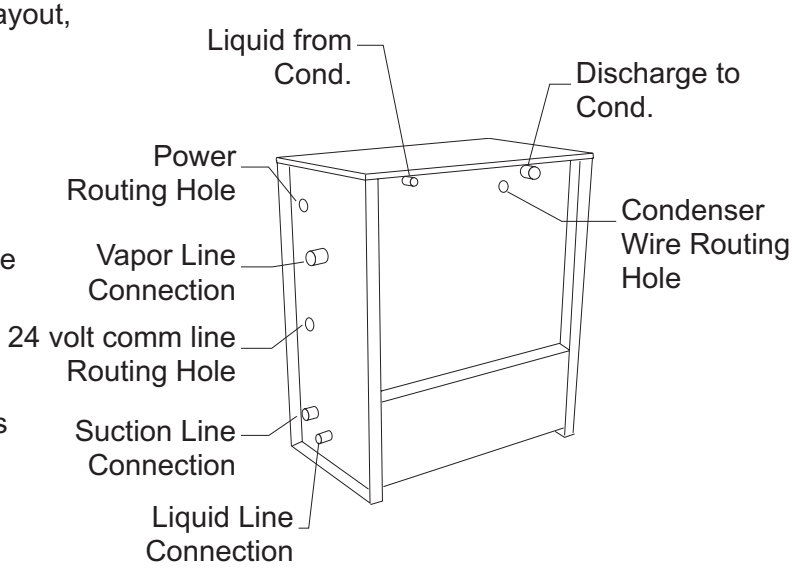

CP Unit Refrigeration Connection ID

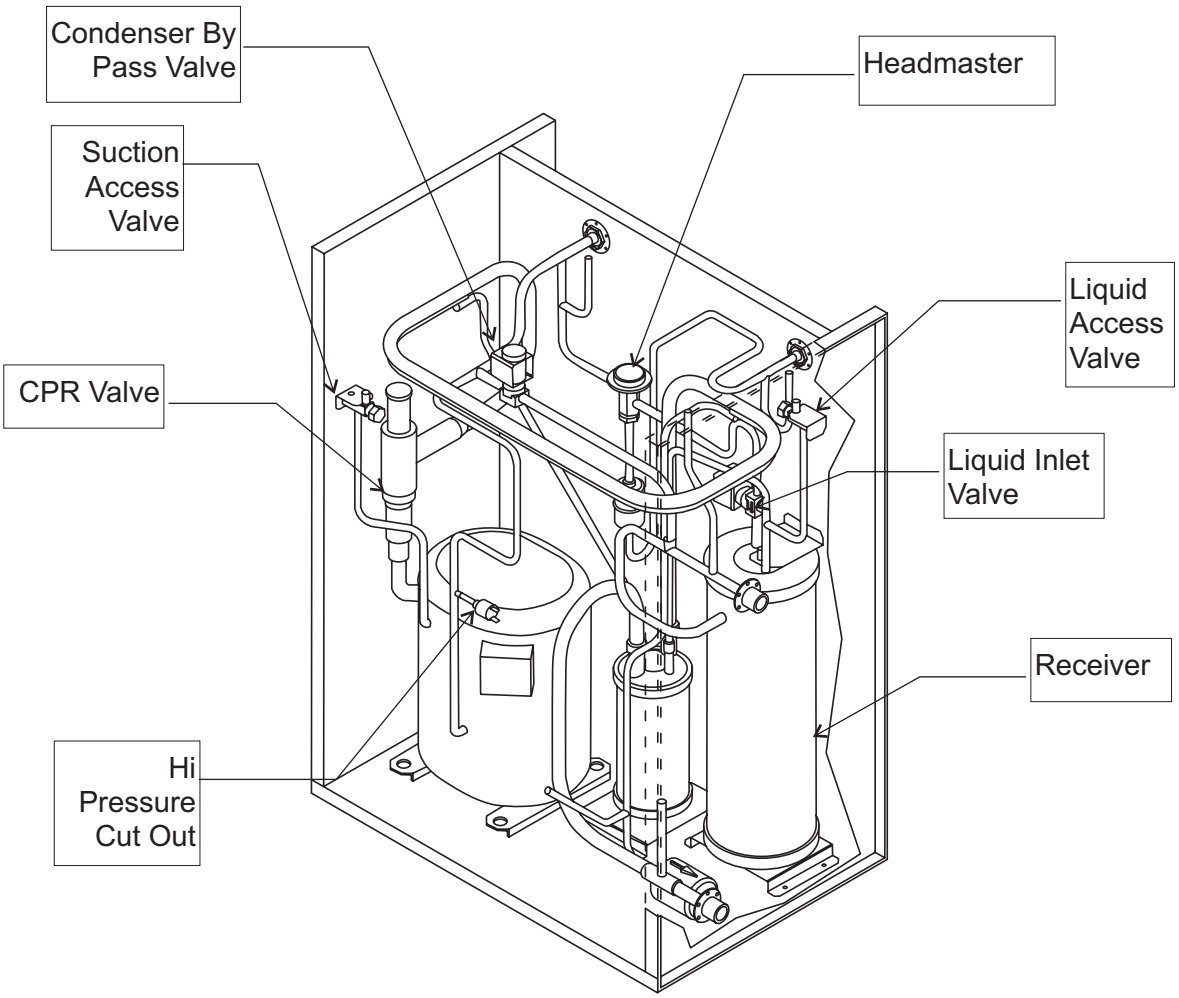

CP Component Location

Condensing Section Assembly

(CP1316 to ERC1086):

1. Remove cartons from compressor package and condenser.

2. Remove top from both units.

3. Remove front panel from CP unit.

4. Locate legs, secured to ERC unit.

5. Locate fasteners, inside junction box of ERC unit.

6. Assemble rear legs to ERC using fasteners from prior step.

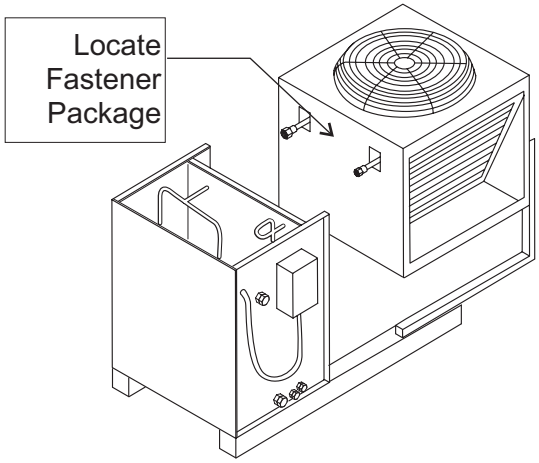

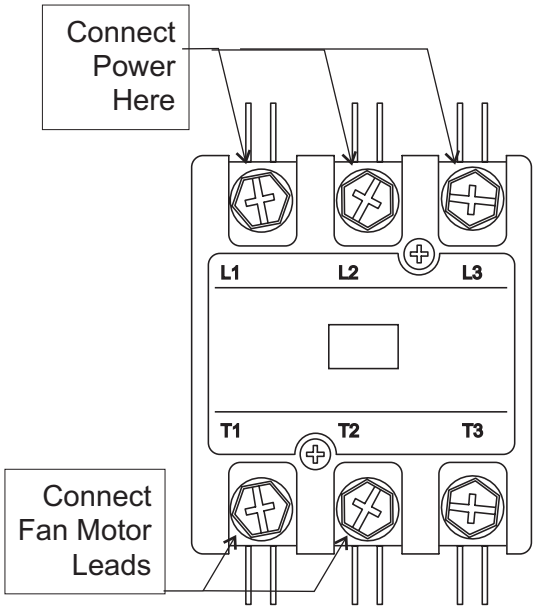

CP Unit Contactor, Three Phase Shown

7. Locate wire package in CP unit. Remove short wires and two wire nuts.

8. Use wire & wire nuts from step 7 to connect to the wires inside the junction box of the condenser. Return junction box cover to its original position.

9. Place front of ERC on back flange of CP unit.

10. Secure CP unit to ERC.

11. Attach leg brace between ERC unit and CP unit.

12. Route wires from condenser through hole in back of CP unit to the CP unit control box.

13 Pull ERC female refrigerant connections forward to engage male connections on CP unit.

14. Rotate swivel nuts to tighten refrigerant connections. Use a back up wrench to hold female connection to prevent tearing of the diaphragms.

15. Connect wire to **T1** and **T2** of the contactor. Use the two wire nuts to connect the other end to the two black wires in the condenser junction box.

16. Return tops to their original positions.

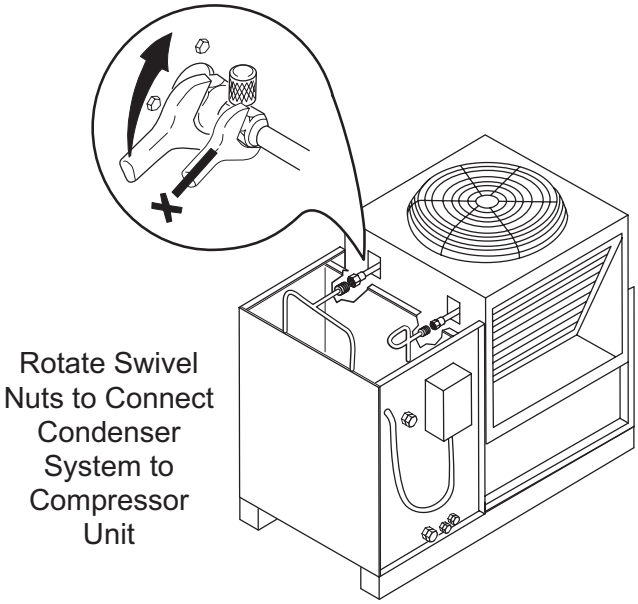

Condensing Section Assembly

Alternate Assembly:

The CP unit may be connected to an approved condenser coil in a central condenser rack. In those cases, the CP unit must be connected to the condenser coil using special kit RTE10.

Position the CP unit in its final spot. It must be within 6 feet of the condenser coil connections.

Route tubing from kit RTE10 from the CP unit to the condenser coil.

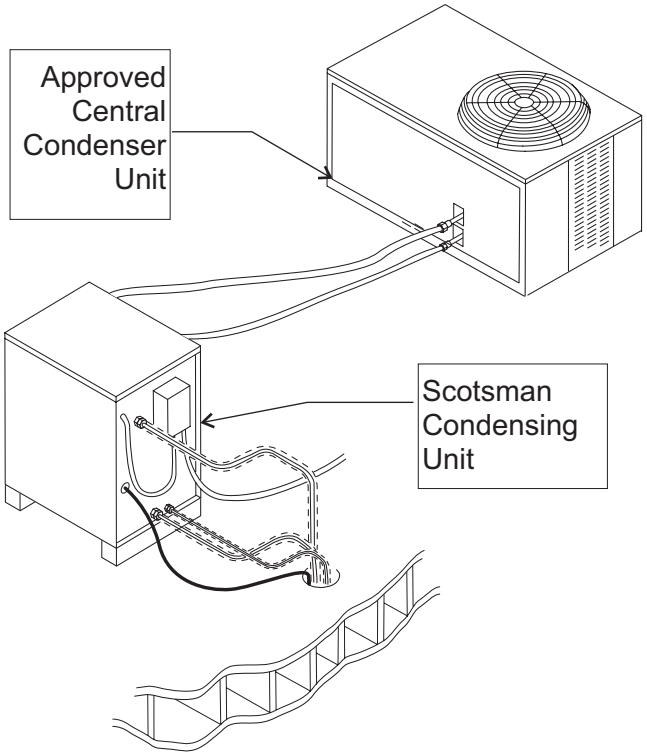

Connect tubing per the Coupling Instructions in this manual.

No wire connection is required between the CP unit at the condenser.

Note: Approved condensers must maintain power to their fan motor at all times.

Note: For local codes requiring a pressure relief valve: Recover charge and connect valve to receiver liquid outlet tubing.

All Assemblies:

Route interconnecting control wire through proper hole in side of CP unit and plug into the connection on the bottom of the control box.

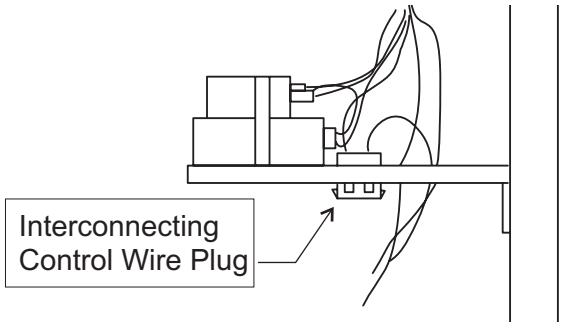

Control Wire Connection in CP Unit

Route power conduit (liquid tight) and wires to the hole in the side of the CP unit. Secure with the proper type of connector.

Note: The power supply wires must be the correct size and type per the National Electric Code. Locate the nameplate on the CP unit for the Voltage, Phase, Minimum Circuit Ampacity and Maximum Fuse Size. Either fuses or HACR type circuit breakers may be used.

Follow all Local, State and National Codes.

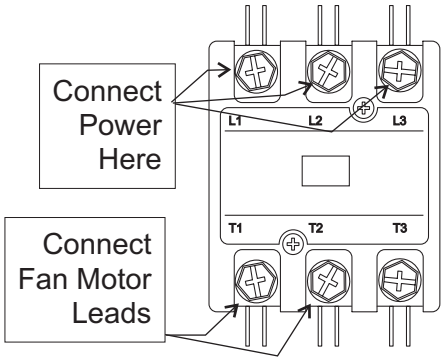

CP Unit Contactor, Three Phase Shown

Connect power wires to the contactor, L1 and L2 if single phase, L1, L2 and L3 if three phase. Note: If there is a “wild leg” in the three phase power supply place it on L3.

Connect electrical power to the CP unit.

Return front of CP unit to its original position.

Ice making section:

Remove from carton.

Remove all panels.

Utility Connection Route:

Electrical: The unit is supplied with a power cord. The power cord can be routed out the back, left side or top. There is also an interconnecting control wire that must be routed between the ice making head and the CP unit. That wire can be routed out the back or top.

Water Supply: The water supply can be routed from the top, back or left side.

Drain: The drain can be routed out the back or the left side.

Refrigeration Tubing: The tubing can be routed out the top or the back.

Adapters:

In many cases an adapter kit will be required when placing the head unit on a bin or dispenser. See sales information for the correct kit. Place adapter kit onto bin or dispenser top. If adapter does NOT have gasket tape install tape such as Scotsman part number 19-0503-04.

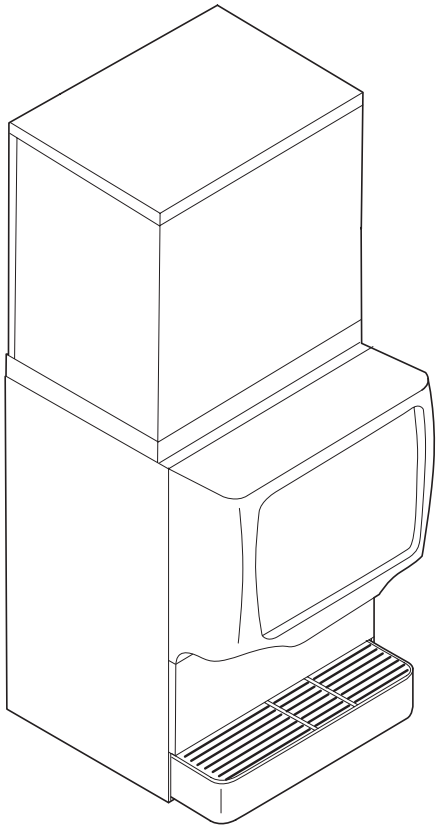

IMS Shown on Ice Dispenser

Attachment:

If the unit is a direct fit, place it on the bin. If the unit is in a position that it need not be moved to complete the installation, secure it to the bin with the hardware provided with the head unit.

On some bins or dispensers it may be necessary to drill small holes and use field supplied sheet metal screws to secure the ice making head to that bin, dispenser or adapter.

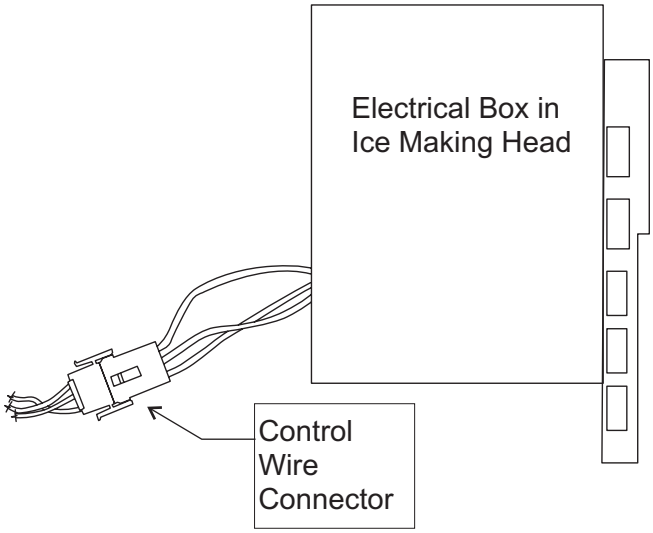

Ice Making Section Control Wire Connection

Control Wire

Plug the interconnecting control wire into the harness at the back of the head unit's electrical box.

Bin Thermostat - Routing

Install the bin thermostat **after** the ice making head has been placed on the bin or dispenser.

Note: Dispensers may require special attention to keep ice or agitator/sweep arm from moving the thermostat from its installed position. Place the head on the dispenser and install the thermostat before connecting refrigerant tubing.

Before starting, remove the left side and front panels and any baffle in the bin.

1. Locate bin thermostat bulb.
2. Route bulb thru routing tube (located behind the reservoir).
3. Locate bin thermostat bracket.
4. Carefully position the thermostat bulb on the bracket (see the diagram on the next page).
5. Fasten the bracket to the bottom of the ice machine with the two 3-pronged knob head screws supplied with the unit.
6. Pull back into the ice machine any excess capillary tubing.
7. Return the baffle to the bin and continue with the installation.

Note: If the machine is located at an altitude higher than 2,000 ft., adjust the thermostat by removing the plastic cover and rotating the adjustment screw per the table.

Bin Thermostat Altitude Correction Table			
CW Turns of Range Screw (under plastic cover)			
Feet	Turns	Feet	Turns
2000	55°	8000	340°
4000	160°	9000	385°
6000	250°	10000	405°

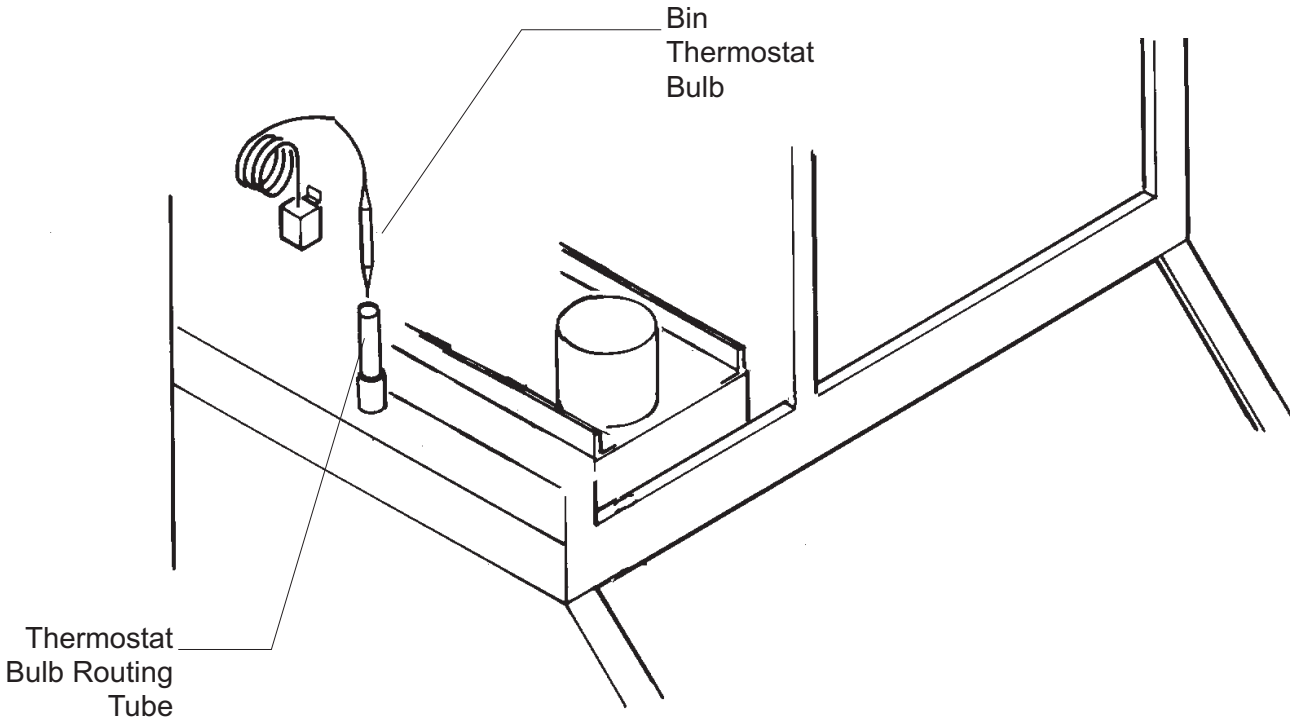

Bin Thermostat - Bracket & Bulb

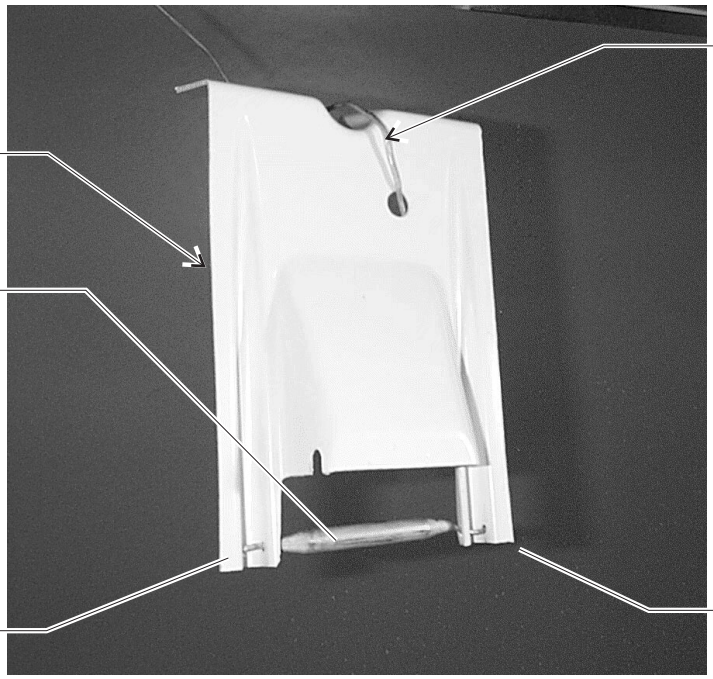

Attach Thermostat Bulb to Bracket

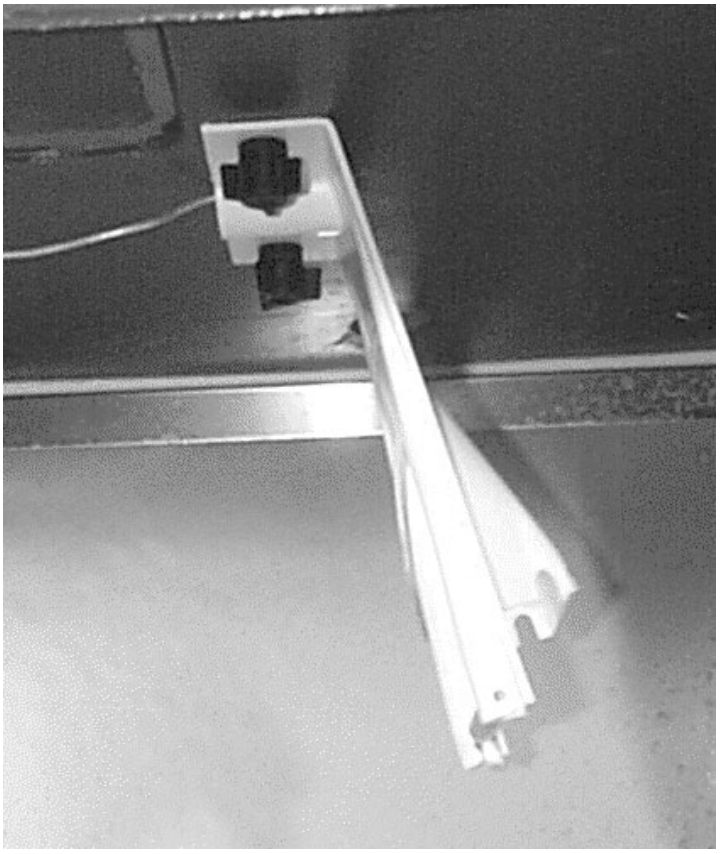

Mount Bracket to Bottom of ice Head

Water and Drain

The ice making section requires an adequate potable water supply and a gravity drain.

Determine how the water supply and drain will be connected to the ice making section.

- If access is available behind the unit, route the drain and water supply in from the back.
- If the unit is to be flush mounted to the back of the bin or dispenser and tight against the wall, the water supply must enter the cabinet through the area in the lower back of the left side panel or through the top panel with the refrigerant lines.
- If the unit is to be flush mounted to the back of the bin or dispenser and tight against the wall, the drain must be routed through the area in the lower back of the left side panel.

In some tight situations it will be necessary to assemble the ice making section to the dispenser or bin and install the water and drain connections before placing the system in its installed position. A loop of water supply tubing will allow movement of the system.

In other tight situations the unit should have its water and drain tubing connected and stubbed out before placing on the dispenser or bin.

The drain fitting is adaptable to drain connections to the left or back.

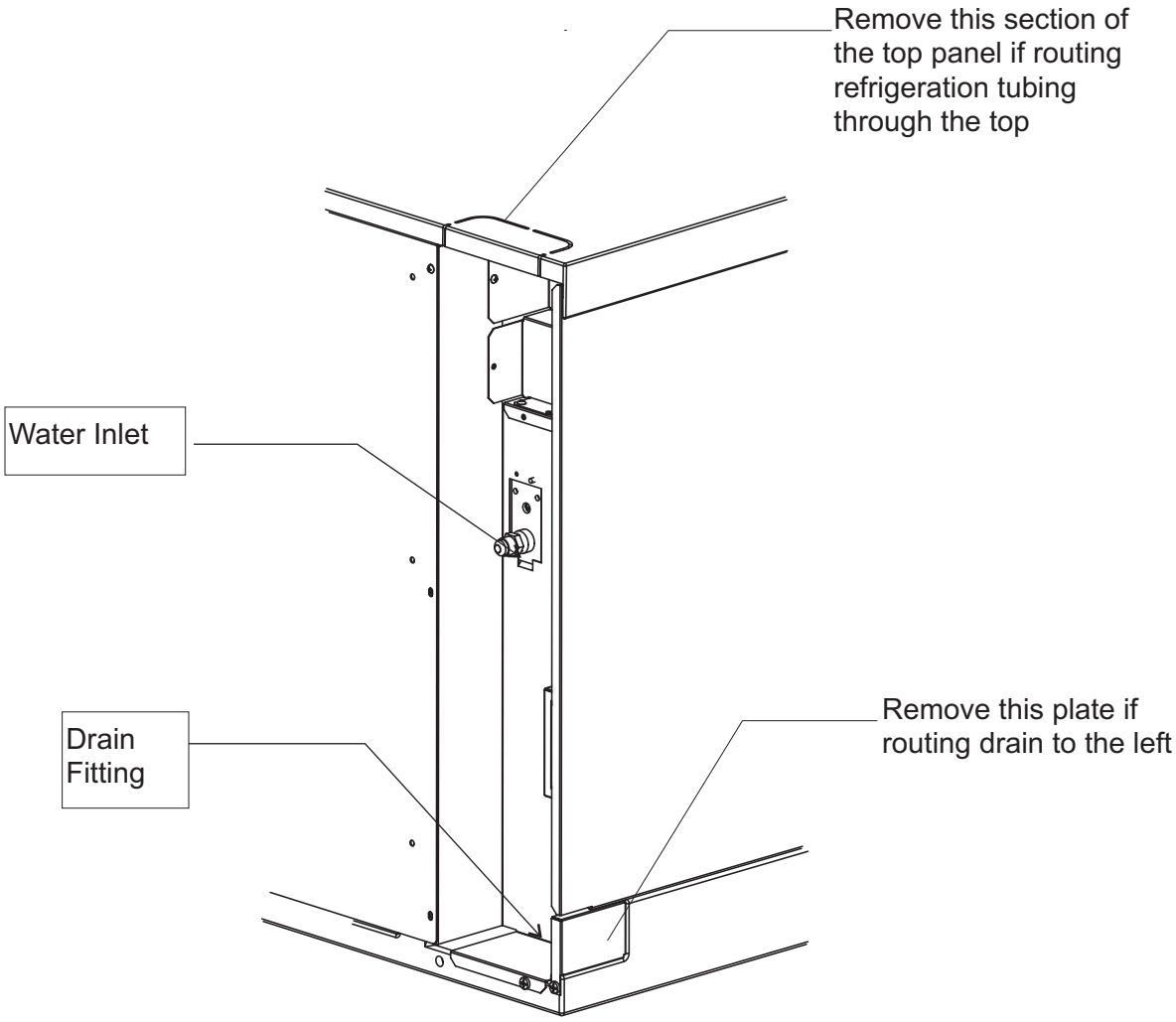

Water and Drain

Water Supply: Connect a supply of cold, potable water to the 3/8” fitting on the right side of the cabinet. A male flare fitting is on the unit.

Note: This is an NSF listed ice machine and contains provisions for back-flow prevention in its design. No external back flow preventer is required.

Drain: Connect rigid drain tubing to the reservoir drain fitting. Route the drain either out the back or to the left side. Add a 18” vertical vent to the drain tube.

Route the drain tubing to the building drain. Do not “Tee” into any other drain, including the bin or dispenser drain.

Follow all local codes.

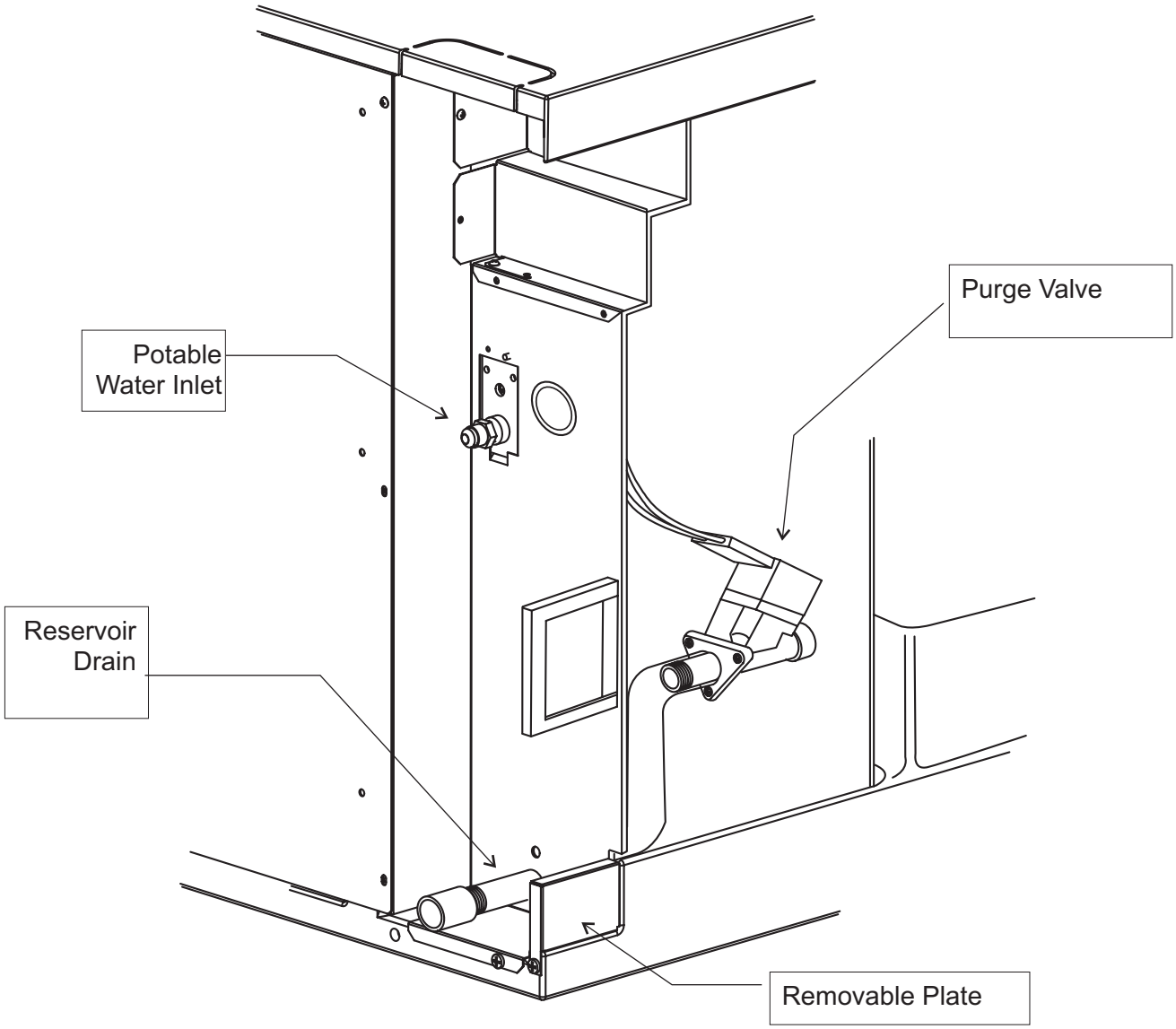

Back View, Drain Tubing Installed for Back Drain

Ice Making Section Set Up

Rotate the ice making section as needed to access the left side, where the refrigeration connections will be made. Connect the suction line to the top fitting. Connect the vapor line to the middle fitting. Connect the liquid line to the bottom fitting.

See Coupling Connections on the next page for detailed instructions.

After couplings are connected, add cork-tape type insulation to exposed fittings to reduce condensation potential.

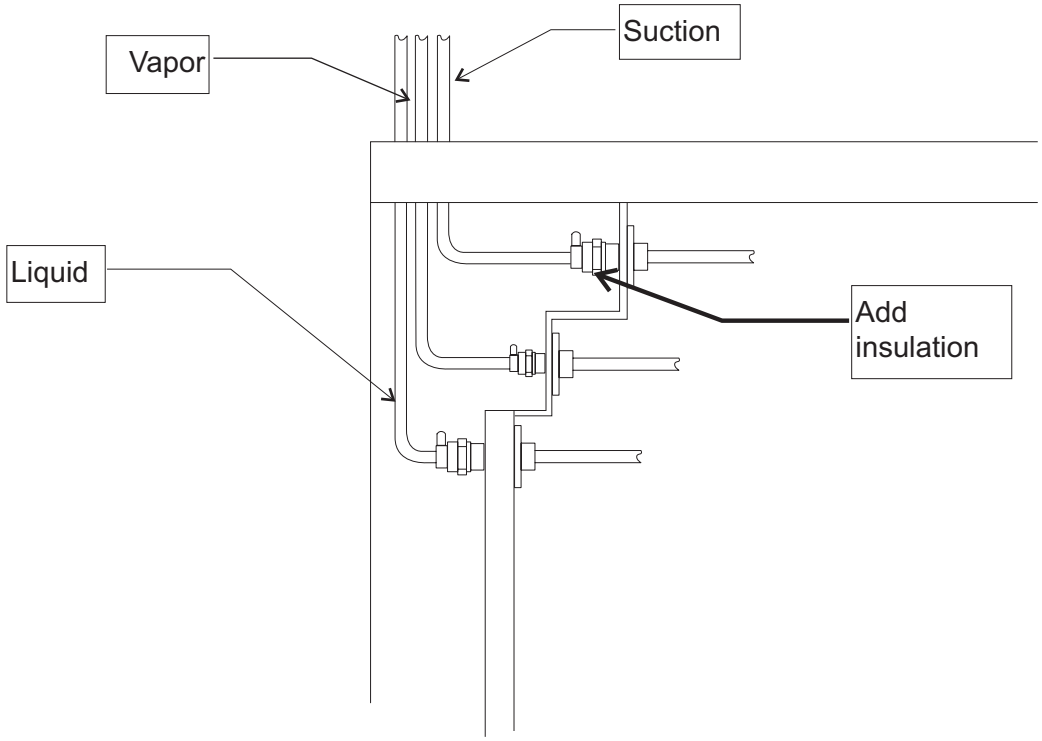

Refrigerant Lines, Shown Routed Out The Top

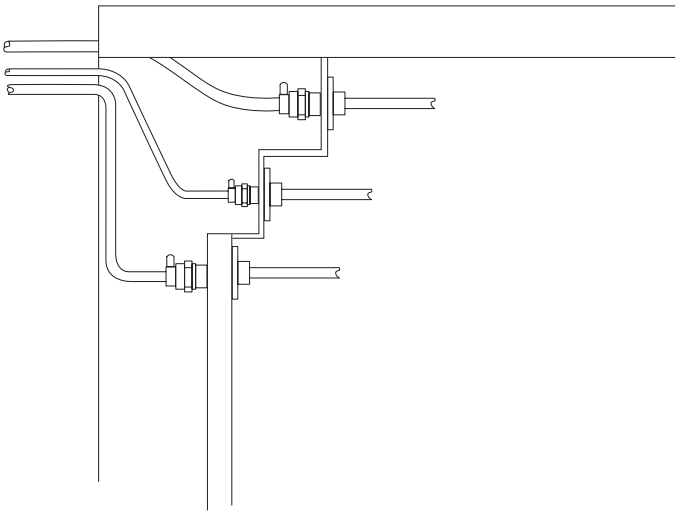

Refrigerant Lines, Shown Routed Out the Back

Coupling Connections:

The couplings on the ends of the pre-charged line sets are self-sealing when installed properly.

Follow these instructions carefully. These steps must be performed by an EPA Certified Type II or higher technician.

Initial Connections

1. Remove the protector caps and plugs. Wipe the seats and threaded surfaces with a clean cloth to remove any possible foreign matter.

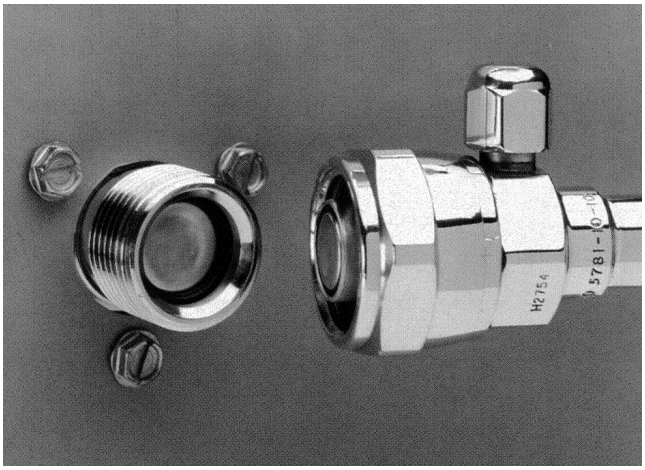

Clean and Lubricate Couplings

2. Thoroughly lubricate the threads, o-rings, diaphragms and all internal coupling surfaces with polyolester refrigerant oil.

3. Position the fittings on the correct connections on the condenser and ice machine.

Final Connections:

4a. Begin to tighten the couplings together by hand. Continue to turn the swivel nuts by hand until it is certain that the threads are properly engaged.

4b. Using two wrenches, one to rotate the swivel nut and one to hold the tubing in place, tighten each coupling.

It is CRITICAL that ONLY the NUT on the pre-charged tube be turned, or the diaphragms will be torn by the piercing knives and become loose in the refrigeration system causing severe operational problems.

Note: As the coupling is tightened, the diaphragms in the quick connect couplings will begin to be pierced. As that happens, there will be increased resistance to tightening the swivel nut.

4c. Continue tightening the swivel nut until it bottoms out or a very definite increase in resistance is felt (no threads should be showing). Do NOT overtighten.

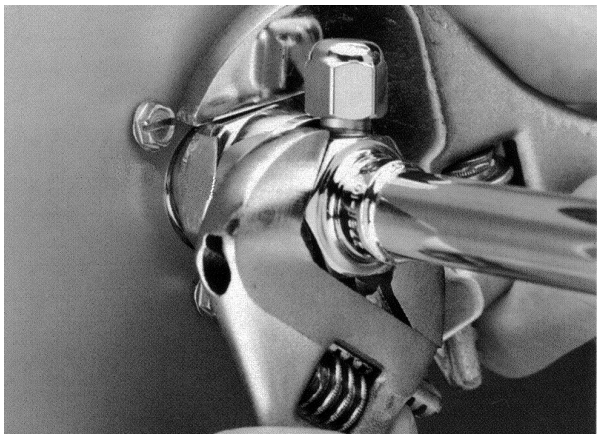

Tighten Swivel Nut

5. Use a marker or pen to mark a line on the coupling nut and unit panel. Then tighten the coupling nut an additional one-quarter turn. The line will show the amount that the nut turns.

Rotate Swivel Nut ¼ Turn More

6. After all connections have been made check the couplings for leaks.

7. Add cork tape to the swivel nut of the suction line to insulate it. **Be sure all exposed tubing of the suction line is insulated.**

Note: The system charge is contained in the receiver tank of the ice machine. Only “holding" charges are present in the “pre-charged" tubing or the condenser.

Condensing Unit Connections

Connect the suction line, the vapor line and the liquid line to the matching fittings on the CP unit.

See Coupling Connections on the prior page for detailed instructions.

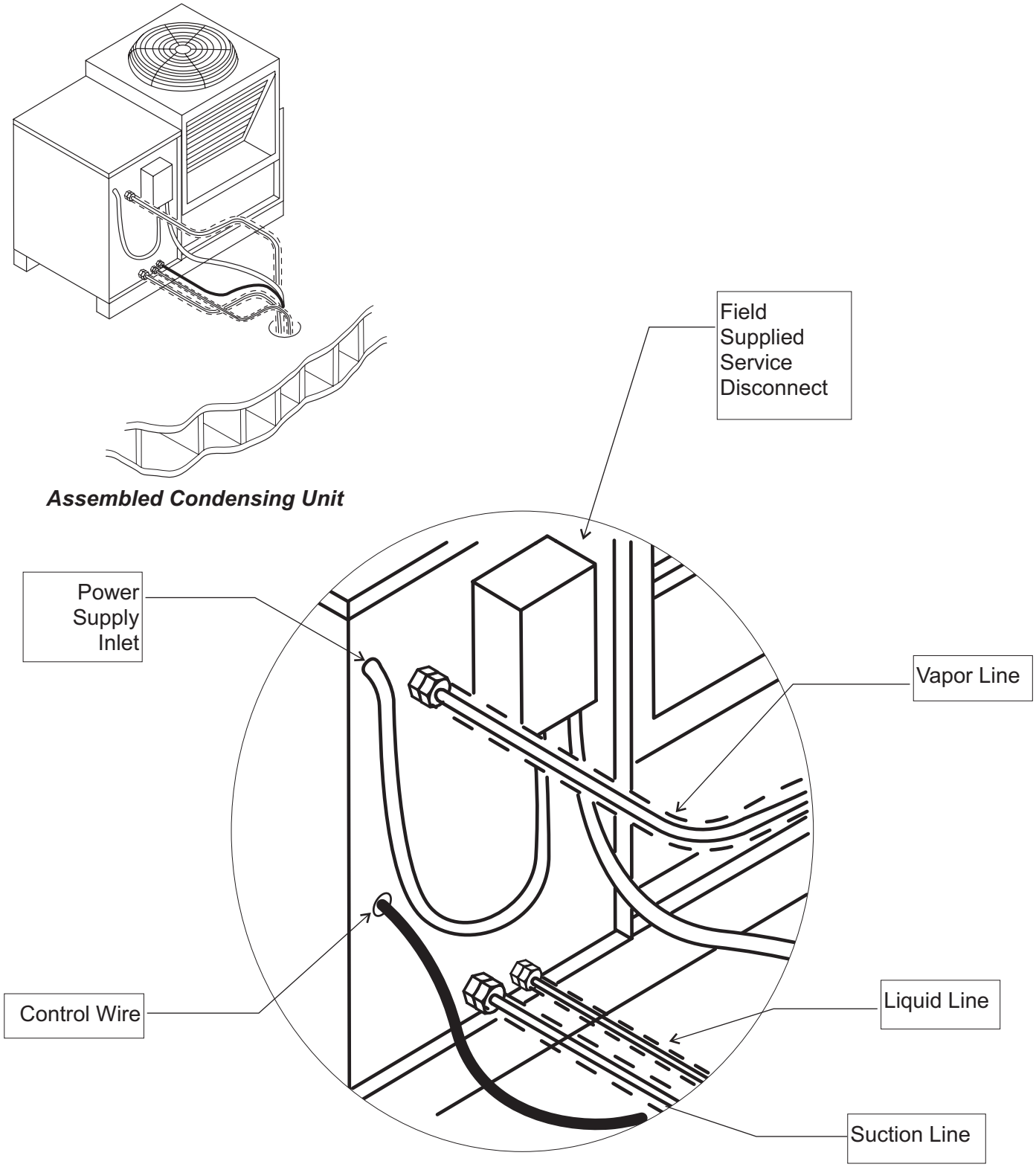

Assembled Condensing Unit

Final Placement

After the utilities and refrigeration connections have been made, secure the unit to the dispenser or bin top.

Secure ice making section to dispenser or bin adapter.

Use strap/clips to secure unit. On some bins or dispensers it may be necessary to drill small holes and use field supplied sheet metal screws to secure the ice making head to that bin, dispenser or adapter.

If the ice maker & bin or dispenser is not yet in its final position gently move it there.

Note: The refrigerant lines above the machine must be able to move freely while the machine is being moved into position.

Final Check List Before Initial Start Up

1. Confirm that the ice making section is installed indoors in a controlled environment.
2. Confirm that all packing materials have been removed from all products.
3. Confirm that the ice making section is level.
4. Confirm that all the refrigerant connections have been made and checked for leaks.
5. Confirm that the proper power supply has been turned on to the condensing unit.
6. Confirm that cold, potable water has been supplied to the ice making section and checked for leaks.
7. Confirm that the water supply is adequate.
8. Confirm that there is adequate water pressure and that any water filters have been checked to confirm that the cartridges do not need changing.
9. Confirm that the proper size drain tubing has been installed and properly routed.
10. Confirm that the ice making section has been connected to the proper power supply.
11. Confirm that the interconnecting wire has been routed and connected between the ice making section and the compressor package.
12. Confirm that the bin thermostat has been properly installed.

Controller Operation

The controller has seven indicator lights and four push buttons.

Indicator Lights

Bin Full: On when the bin is full, blinks on and off as ice falls during a harvest cycle.

Freeze: On when the unit is in the Freeze cycle. Blinks when a freeze cycle is pending.

Harvest: On when the unit is in the Harvest cycle.

Clean: Blinks when the unit is in the first part of a Clean cycle, on steady when switched to the second part.

Off: On when the unit has been switched off, blinks when the unit is preparing to shut off.

Water Diagnostic: On when the controller has identified a problem with the water system. Flashes a code to specify what area may be the problem.

Refrigeration Diagnostic: On when the controller has identified a problem with the refrigeration system. Flashes a code to specify what area may be the problem.

Push Buttons

Freeze: Push and Release to start the unit

Harvest: Push and Release to start a manual harvest of ice.

Clean: Push and Release to start the first part of the cleaning process. Push and release again to start the second part of the cleaning process.

Off: Push and Release to shut the machine off at the end of the next harvest cycle. Push and Hold for three seconds to stop the machine. Push and Hold again to go into the Purge Adjustment or Error Recall mode.

Cycle Definitions:

Freeze: The refrigeration system is operating to remove heat from the evaporators. The compressor, fan motor, and water pump are on.

Harvest: The refrigeration system and water system are operating to harvest the ice and rinse the reservoir. The compressor is on for the full cycle, the pump is off and then on, the purge valve is open and then closed, the inlet water valve is closed, opens and recluses. The vapor and condenser by-pass valves are open during the entire harvest cycle.

Clean: The inlet water valve opens to fill the reservoir. The water pump starts. The Clean indicator light is switched On. A manually initiated rinse flushes the system.

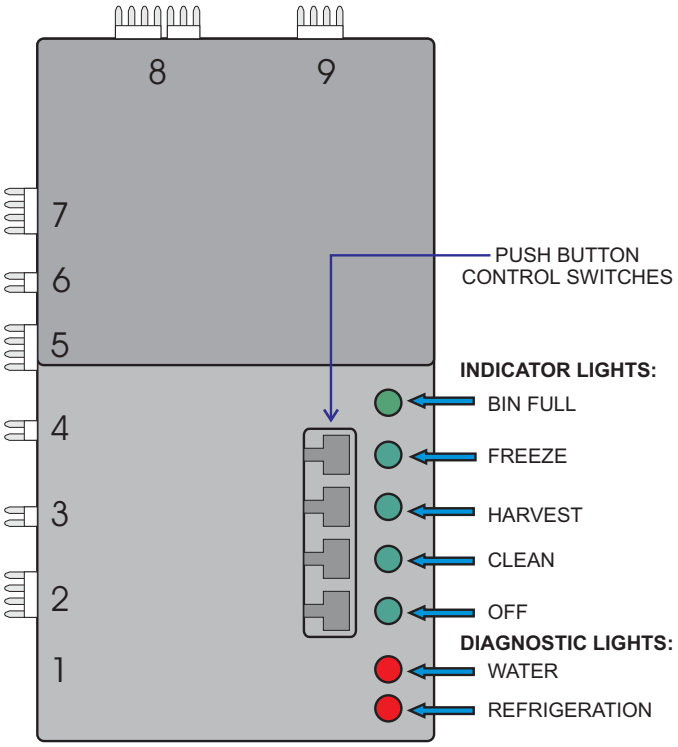

Controller Lights and Push Buttons

Initial Start Up - 1300 and 1600

Pre Start

A soak-out period of four hours is optional for this system. If desired, powering the compressor unit for four hours prior to start up allows the crankcase heater to warm up the oil in the compressor.

Start Up

1. Connect power to the condensing unit and move its toggle switch to Run or On.

2. Open the water supply valve.

3. Connect or reconnect power to the ice making section.

4. Observe the lights on the controller:

- All flash on as the power supply is reconnected.
- The two red lights blink for 20 seconds while some green lights are on. See page 43.

Note: If the light pattern does NOT match – do not start the machine. Install a replacement controller set to the correct program.

- The red lights and harvest lights go out.
- The Off light turns on.
- The Bin Full light will be on for a few seconds.

At this point the machine is ready for start up.

5. Push and Release the Freeze button to start the machine.

- The Freeze light will begin to blink.
- The Purge valve will open for a few seconds and then close.
- The Inlet water valve will open and fill the reservoir with water.
- The Water pump will begin to circulate water over the evaporators.

When the reservoir is full, the Freeze light will stop blinking and the controller will close a circuit to the compressor contactor to start the first freeze cycle.

Note: Because the condensing unit is external to the ice making section, no visible signs of operation will be noticeable until the water begins to cool and frost forms on the evaporator tubing.

6. Go to the condensing unit and confirm that the compressor and fan motor are operating. Warm air will be discharged from the condenser.

After a few minutes ice will begin to form on the evaporators. When enough ice has formed to nearly empty the water reservoir, the controller will refill the reservoir. The next time the water level drops that far, the ice is ready for release and the Controller will initiate a Harvest cycle.

- The Freeze light goes out and the Harvest light switches on.
- The vapor inlet valve in the ice making section opens.
- In the CP unit, the condenser by-pass valve opens and the liquid inlet valve closes
- The water pump stops.
- The purge valve opens.

Refrigerant vapor flows into the evaporators where it condenses, discharging its latent heat.

The evaporators warm up and melt the bond between the ice cube surface and the evaporator cells.

After about 20 seconds the water pump re-starts to purge water out of the reservoir.

After a few more seconds the purge valve closes and the inlet water valve opens for a few seconds to add some water to the reservoir. The water pump then circulates this water over the evaporators, and ice begins to fall.

As the ice falls, it passes through two infrared light beams. These beams, when interrupted, signal to the Controller that ice is harvesting. The interruptions are shown by the blinking of the Bin Full light.

The first Harvest cycle continues for about 5 minutes. The controller will use the ice release time measured during this time to compute the next harvest cycle.

At the end of the Harvest cycle the ice machine will switch back into a Freeze cycle.

The inlet water valve will open to re-fill the reservoir with water, and the cycle repeats.

Note: Machines are shipped from the factory with the purge level set to accommodate average water conditions. To achieve optimal machine performance, set the purge level to the minimum setting. See the next page.

7. Attach the front panel to the ice making section.

Purge Adjustment

Note: While the amount of water purge is adjustable, only those installations with a water supply known to be excellent (very low TDS) should adjust to the minimum setting. See below for purge adjustment instructions.

How to Adjust the Amount of Water Purge

Adjustment is done by use of the control buttons on the AutoIQ Controller. Examine the next section to become familiar with the AutoIQ Controller before beginning.

1. If the machine is on, push and hold the OFF button for more than 3 seconds, then release it. This switches the machine Off.

2. Push and hold the OFF button for more than 3 seconds (just until all lights flash on) then release it. Do not hold it in it too long.

3. Examine the green lights. They should have all flashed once, then certain ones will have turned on to indicate which purge level the machine is set at.

There are 5 levels of purge available:

- 1. **Maximum Purge** is when All **5** lights are ON. Use for extreme water conditions.
- 2. **Heavy Purge** is when these **4** lights are ON: Freeze, Harvest, Clean, Off. Use for severe water conditions.
- 3. **Standard Purge** (factory setting) is when these **3** lights are ON: Harvest, Clean, Off. Use for moderate to severe water conditions.
- 4. **Moderate Purge** is when these **2** lights are ON: Clean, Off. This is for typical water conditions.
- 5. **Minimum Purge** is when this light is ON: Off. For excellent water conditions.

Adjust by pushing and releasing the Freeze button. Pushing and releasing the Freeze button increases the purge one level up to the maximum, then it goes to the minimum.

4. The machine will automatically restart after 60 seconds of no switch inputs, or restart the machine by pushing in and holding the Off button for more than 3 seconds, then releasing it. The unit will then be Off. From there the machine may be placed in a freeze cycle by pushing and releasing the Freeze button.

Adjustments

Cube Size: Cube size is fixed and cannot be adjusted.

Thermostatic Expansion Valve:

The TXV is not adjustable, do not attempt to adjust it.

If there was a problem during Initial Start Up:

If an error light came on, check the following.

1. Water error.

A water error could have been determined by the AutoIQ Controller if the inlet water valve does not fill the reservoir, or if the water pump does not start and lower the water level.

2. Refrigeration error.

A refrigeration error could have been determined by the AutoIQ Controller if the water temperature did **not** drop during the freeze cycle. The controller will next check the compressor discharge temperature, If the discharge temperature is too low, the refrigerant error light will be switched on, and the machine will Shut Down.

Note: Reset and restart the machine by pushing and releasing the Off push button switch, and then pushing and releasing the freeze push button switch.

System Operation:

This section is intended for the technician. Understanding it is not necessary for the normal operation and maintenance of this ice making system.

Major Components:

Ice making section sub-system:

- Controller,
- Ice Sensors,
- Water Level Sensor,
- Transformer,
- Evaporators,
- Expansion Valve,
- Vapor Inlet Valve,
- Water Pump,
- Inlet Water Valve
- Purge Valve.

Compressor Package sub-system:

- Compressor,
- Contactor,
- Condenser Bypass Valve,
- Liquid Inlet Valve,
- Receiver,
- Accumulator,
- CPR Valve,
- Headmaster.

Condenser sub-system:

- Coils
- Fan Motor

The controller receives input from the water level sensor, ice sensor and temperature sensor. It then actuates various loads in the ice making section and in the condensing unit to control ice making. It also responds to push button input and displays cycle and diagnostic indicators.

Freeze: At the ice making sub system, the controller fills the water reservoir and starts the pump and compressor to make ice. The vapor inlet valve is closed. Water circulates over the evaporators until it begins to freeze to the evaporators. As ice builds up the water level in the reservoir falls until it reaches a point where the water level sensor indicates to the controller that the water level is low. At that point, about half-way through the freeze cycle, the controller opens the water valve to refill the reservoir. The second time the water level drops in the freeze cycle indicates to the controller that the freeze cycle is complete.

In the air cooled condensing unit sub-system (compressor package and condenser) the compressor is on, the condenser by-pass valve is closed, the fan motor is rotating the fan blade.

Harvest: At the ice making sub system, the controller shuts off the pump, opens the vapor inlet valve, opens the purge valve. The controller also controls items in the condensing unit, where the condenser by pass valve is opened. After a set time the water pump restarts and shortly after that the purge valve closes. The inlet water valve opens to add water to the reservoir.

Ice releases and falls into the bin or dispenser.

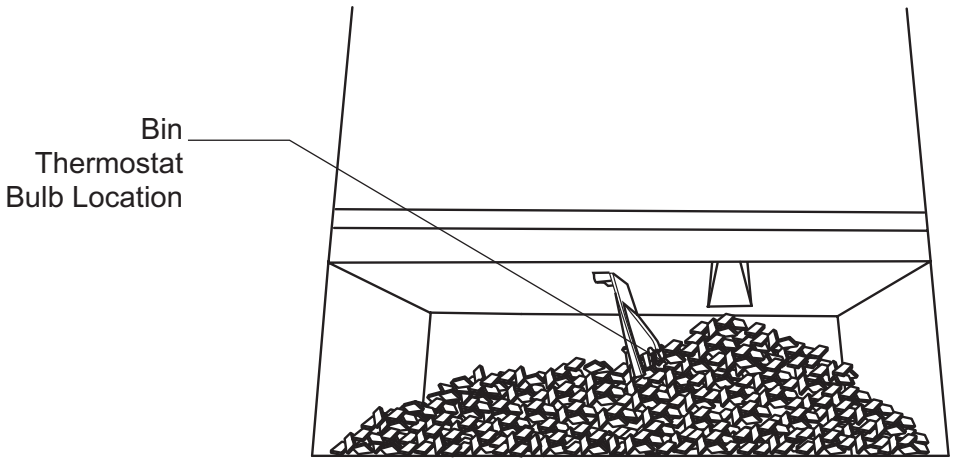

Typical Ice Level When Full - Shown Without Baffle - A Baffle is Recommended

Refrigeration Details:

The compressor provides the force that circulates refrigerant in the refrigeration system. During freeze, when the vapor inlet and condenser by pass valves are closed, discharge gas flows from the compressor into the condenser, where its heat is discharged into the air stream. Liquid refrigerant flows out of the condenser and through the normally open liquid line outlet valve on its way to the receiver inlet. Under low ambient/low pressure conditions, the headmaster valve closes the liquid outlet of the condenser and opens a bypass route to direct refrigerant gas to the receiver inlet until discharge pressure builds back up to the headmaster's set point.

From the receiver liquid outlet, liquid refrigerant flows into the liquid line and into the ice making section. At the ice making section, the refrigerant flows into the expansion valve where a pressure change takes place. The liquid refrigerant moves from the expansion valve into a low-pressure area (the evaporators) where it can rapidly evaporate and absorb heat. Heat is absorbed from the copper evaporator tubing, attached copper, tin, plastic and the water flowing over the evaporators. The low-pressure refrigerant gas then flows into the suction line, which carries it back to the condensing unit, where it enters the accumulator. In the accumulator most of any liquid carried with the suction gas is separated and only vapor flows out of the accumulator through the CPR valve and to the compressor where the cycle continues.

During harvest discharge gas flows through the open condenser by pass valve into the vapor line. Power is also applied to the coil of the liquid inlet valve, closing it. At the same time, in the ice making section, the vapor inlet valve opens. Discharge gas, combined with some vapor from the receiver's outlet, then flows through the vapor line to the evaporator inlets. The gas-vapor combination, when entering the relatively cold evaporators, condenses, transferring latent heat to the evaporators, which warms them. Ice releases and falls into the bin. The low-pressure refrigerant then flows out of the evaporators and into the suction line. The suction line brings the refrigerant, now consisting of a vapor-liquid combination, to the accumulator. From the accumulator the vapor-liquid combination (now more vapor than liquid) goes to the Crankcase Pressure Regulator valve which limits the amount of dome pressure in the compressor, where the cycle continues.

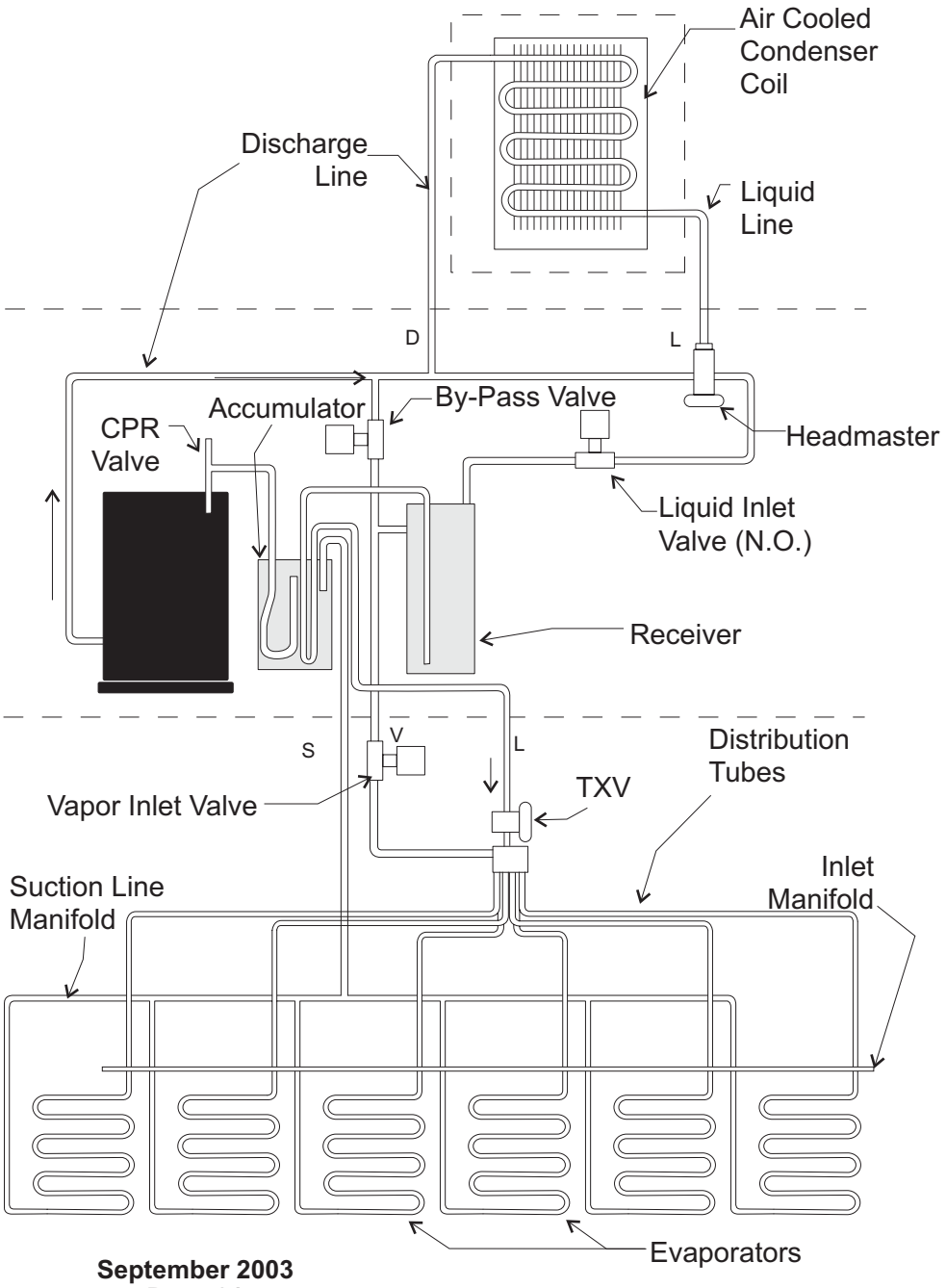

Technicians Only: Freeze Cycle Sequence of Operation

This sequence begins with a restart after the unit has shut off with the bin full. Ice has been consumed, causing the ice sensors to become un-blocked.

1. The controller switches off the bin full light (four minutes has to have passed since the machine shut off on bin full for the machine to restart) and switches on the Freeze light.

2. The purge valve is opened and the pump started.

3. After the purge valve closes the inlet water valve opens and fills the reservoir.

Note: If the water reservoir does not fill within the time period expected the controller will shut off and blink the water diagnostic light. It will re-try to fill the reservoir in 20 minutes. If successful the freeze cycle will continue.

4. The compressor and fan motor start and the freezing process begins.

5. The controller measures the reservoir water temperature and compares it to the temperature it expects to find at that point in the cycle. If normal, nothing happens.

If high, the controller checks the discharge temperature. If that is normal, nothing happens. If that is low, the controller starts a diagnostic process that could lead to the unit shutting off, as the refrigeration system may not be operable.

6. Assuming that the system is working normally, the controller will shut the water pump off for a few seconds when the reservoir's water temperature reaches a pre-set point.

7. As the machine makes ice the water level in the reservoir falls. When it reaches the point where the float stem blocks the upper infrared beam in the water level sensor the controller opens the inlet water valve to refill the reservoir. The water valve stays on until the float stem rises to block the lower beam in the water level sensor.

8. The freezing process continues until the float stem blocks the upper beam for the second time. That signals to the controller that the freezing process is complete.

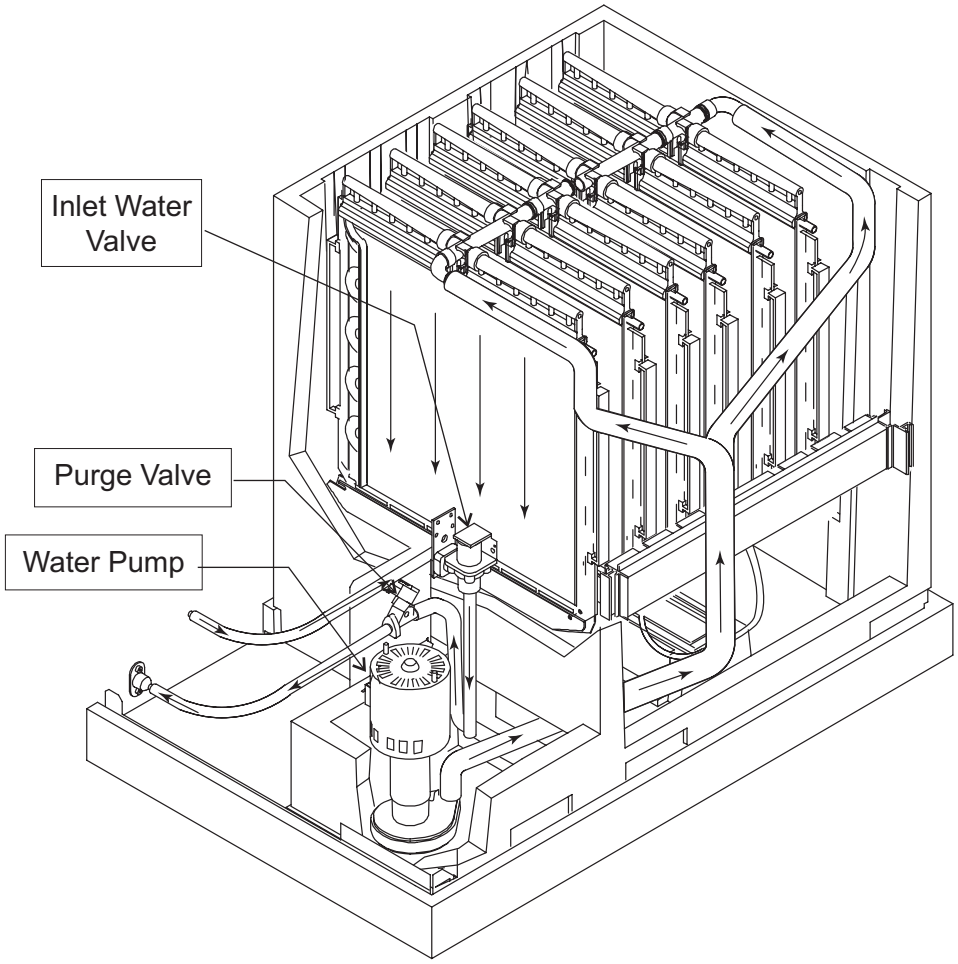

Water Schematic

Technicians Only: Harvest Cycle Sequence of Operation

At the **beginning of harvest**, the controller:

- Shuts off the Freeze light
- Turns on the Harvest light
- Opens the vapor inlet valve
- Opens the condenser bypass valve
- Closes the normally open liquid inlet valve
- Shuts off the water pump
- Opens the purge valve
- Begins to time the harvest cycle

When the ice falls off the evaporators, it passes through the two infrared light beams emitted by the ice sensors in the ice chute. The falling ice breaks the beams, signaling to the controller that ice is being released.

During harvest the controller:

- Blinks the Bin Full light at every light beam interruption to indicate that ice is being sensed
- Changes the time measured from the beginning of harvest to the time the last cube was sensed.

First Harvest Cycle

The first harvest cycle after a restart continues for a default period of about 5 minutes. The next cycle's harvest time will be determined from the actual time used to release ice in this cycle, and will likely be much shorter.

Slow Ice Release

If ice releases slowly the controller will extend the harvest cycle until it ice quits falling within the normal harvest time or until it reaches the pre-set maximum time. The controller will then return the unit to the freeze cycle.

No Ice Released

If no ice is sensed harvest continues until it reaches its pre-set maximum, when the controller switches the unit back into freeze.

Shut Down - Maximum Harvest Time

If a maximum harvest time is reached again during the next harvest cycle, the controller will shut the system down and blink the refrigeration diagnostic light. It will automatically attempt a restart in 50 minutes. If the maximum harvest time is reached again in the next two consecutive cycles, the controller will repeat the shut down and restart process. If the system still requires a maximum length harvest cycle the controller will shut the unit down and must be manually reset.

Purge Valve

The purge valve is open for a fixed time period. At the beginning of that time the pump is off, but after the time determined by the Purge setting in the controller, the pump starts and forces water out of the reservoir. The pump stays on after the purge valve closes. The inlet water valve opens for a few seconds to add water (but not fill) the reservoir.

End of Cycle

At the end of the harvest cycle the controller switches the Harvest light off and the Freeze light on. If the ice sensors had been blocked continuously for more than 5 seconds the controller senses this as Bin Full and would then shut the machine off and turn on the Bin Full light.

At the beginning of the Freeze cycle the inlet water valve is turned on to fill the reservoir and the cycle repeats.

Power and Water Interruptions

Short (less than one second) power interruptions cause no change in operation.

Longer interruptions initiate a restart process:

- Freeze light blinks on controller
- Compressor is off
- Vapor inlet valve opens
- Liquid inlet valve closes
- Purge valve opens
- Pump starts, empties the reservoir
- Purge valve closes
- Inlet water valve fills reservoir
- The Compressor starts
- Vapor inlet valve closes
- Liquid inlet valve opens
- Freeze cycle proceeds for 30 seconds
- Harvest cycle initiated, continues for 4 minutes
- Normal freeze cycle starts

Water Interruptions

The water level sensor checks for water fill whenever the water inlet valve is activated. If the water level sensor does not record a full reservoir within the pre-set time, the controller

- shuts the unit off
- blinks the water diagnostic light two times and repeats

After 20 minutes the inlet water valve is powered again and if the water level sensor is satisfied, the unit is restarted. If the controller still doesn't sense a full reservoir it keeps the unit off for another 20 minutes and then restarts the water fill process.

The process of retrying water fill will continue until a full reservoir is sensed. There is no limit to the number of refill attempts.

Sanitation and Cleaning

It is the User's responsibility to keep the ice machine and ice storage bin in a sanitary condition. Without human intervention, sanitation will not be maintained. Ice machines also require occasional cleaning of their water systems with a specifically designed chemical. This chemical dissolves mineral build up that forms during the ice making process.

Sanitize the ice storage bin as frequently as local health codes require, and every time the ice machine is cleaned and sanitized.

The ice machine's water system should be cleaned and sanitized a minimum of twice per year.

In Place Cleaning of the Water System

1. Remove all ice from the bin.

2. Remove the front panel.

3. Push and release the Harvest button (this releases any ice that may be on the evaporators and warms them up).

4. Wait for the machine to finish the Harvest cycle (the machine will stop).

5. Remove the the insulated plastic evaporator cover, the two inner splash panels (part number 02-3680-01 and the one above it), both cube deflectors, and the ice sensors. Place the splash panels and the cube deflectors in a separate container. Place the ice sensors in the reservoir, but be sure that the ends of the connecting wires are not in the water.

6. Push and release the Clean button. The Clean indicator light will be blinking, and the pump will restart.

7. Pour 24 ounces of Scotsman Ice Machine Cleaner into the reservoir water. Return the evaporator cover to its normal position.

8. Mix a solution of 8 ounces of Scotsman ice machine cleaner and 1 gallon of warm (95-115°F.) water. Use the solution to scrub the splash panels and cube deflectors in the separate container.

⚠WARNING	**Scotsman Ice Machine Cleaner contains acids.** Acids may cause burns. If concentrated cleaner comes in contact with skin, flush with water. If swallowed, do NOT induce vomiting. Give large amounts of water or Milk. Call Physician immediately. Keep out of the reach of children.

9. After the ice machine cleaner has circulated for 10 minutes, push and release the Clean button. This starts the rinsing process. The Clean indicator light will be ON. Note: The rinse process flushes any residual cleaner out of the ice machine's water system.

10. Continue the rinsing process for 20 minutes, then push the off button to switch the machine off.

11. Go to the next step to sanitize the machine or go to step 19 to finish the cleaning process.

12. Mix 2 gallons of Sanitizer solution. Follow local codes for Sanitizer.

Note: A possible sanitizing solution may be made by mixing 1 ounce of liquid household bleach with 2 gallons of warm (95-115°F.) potable water.

13. Push and release the Clean button again.

14. Pour 24 ounces of Sanitizer solution into the reservoir water.

15. After the solution has circulated for 10 minutes push and release the Clean button. This starts the rinse process. Sanitize the ice storage bin while waiting.

16. Continue the rinsing process for 20 minutes, then push the off button to switch the machine off.

17. Remove the evaporator cover and spray or wash all interior surfaces of the freezing compartment including the evaporator cover with sanitizer solution.

18. Thoroughly immerse the splash panels and cube deflectors in the sanitizing solution.

19. Return the ice sensors, splash panels and cube deflectors to their original positions.

20. Return the evaporator cover to its original position. Push and release the Freeze button.

21. Return the front panel to its normal position and secure it to the machine with the original screws.

Other Maintenance

The remote air cooled condenser coil must be cleaned occasionally to keep the system operating at high efficiency.

- Remove any large debris from the outside of the coil.
- Vacuum accumulated dust.
- Wash out the coils with water.

Caution: Do NOT use excessive water pressure as that will bend the fins.

- Straighten any damaged fins with a fin comb.
- If the coils have become coated with grease, a coil cleaner will have to be used to wash the coils.

Disconnect power to the condensing unit and remove the condenser top.

⚠WARNING	**Moving Parts Hazard** **Rotating fan blade can cause cuts** Disconnect electrical power before removing condenser top or fan guard.

- Inspect the fan blade to be sure it is not cracked and is clean.

Return the condenser top to its original position and reconnect the power supply.

Water Distributors

It may become necessary to remove the water distributors from the top of the evaporator and clean (de-mineralize) them outside of the ice machine.

1. Remove front panel.

2. Push and release the off button.

3. Remove the evaporator cover.

4. Remove the upper splash panel.

5. Remove the top panel.

6. Lift the center of the distributor assembly to release them from the top of the evaporators. Repeat for each plate.

7. Examine the top of the evaporators. The water distribution channels must be free of mineral build up. If build up is present, scrub the channels with Scotsman Ice Machine Cleaner and a plastic bristle brush.

8. Examine the water distributors. Although they are made of a material that is resistant to mineral build up, some may be present, especially in the discharge holes. Soak or scrub the distributors in a solution of Scotsman Ice Machine Cleaner and warm, potable water.

9. Return the water distributors to their normal position.

10. Snap the two distributors onto the top of each evaporator.

11. Repeat for all evaporators.

12. Reconnect the water hose.

13. Push and release the clean button to begin the cleaning process, after the reservoir refills push and release the button again to start the rinse process. After 20 minutes push and release the Off button.

14. Push and release the Freeze button.

15. Return all covers and panels to their original positions.

Inlet Water Valve Screen

The inlet water valve has a screen on its inlet side to keep debris from flowing into the valve. In some cases, this screen may become clogged or restricted by debris build up. Check for the proper water flow.

Flow rate is 2.77 GPM

1. Remove front panel.

2. Obtain a measuring cup and a watch.

3. Push and release the Harvest button.

4. When the water valve opens, it will fill a 16 ounce cup in about 3 seconds. Be prepared to push the Off button! If the water does not flow in fast enough, the water inlet valve or other water device is restricted.

To Check the Inlet Water Valve Screen

1. Disconnect the electrical power.

2. Shut off the water supply.

3. Remove the front panel.

4. Unplug the electrical connection from the inlet water valve.

5. Remove the screws holding the water valve to the cabinet.

6. Remove the outlet tube from the inlet water valve.

7. Rotate the inlet water valve from the inlet fitting and remove valve from machine.

8. Examine the inlet screen. If dirty, brush the dirt from the screen.

Note: Screen is not replaceable, and may only be removed by taking off the covering bracket. The bracket is part of the valve and must be water tight. Removal is not recommended.

9. Reverse to reassemble.

Ice Sensors

The ice sensors, located in holders in the base of the ice making section, must be clean and free of mineral scale to provide the controller with accurate information.

To clean them they must be removed from their installed positions.

1. Remove front panel.

2. Push and release the Harvest button to release ice. When ice quits falling, push and hold the Off button until the machine stops.

3. Remove evaporator cover.

4. Remove lower splash panel.

5. Locate sensors. There is one at the back and one at the front of the ice outlet port.

6. Pull the back sensor forward and out of its mounting position.

7. Unplug the sensor from its harness.

8. Remove the bracket holding the front sensor, then pull the front sensor out of the bracket.

9. Each sensor contains a removable tray. One tray contains the infrared emitters, the other the infrared receiver. Each lens must be clean and free of scale for proper operation. The trays may be removed from their holders for better access.

10. Push the tray in with a finger or thumb until the tray flips out of its socket.

11. Wipe the lens clean with a soft cloth dipped in an ice machine cleaner solution (3 parts water to 1 part ice machine cleaner). Do NOT use any abrasives on the lenses.

12. Return the tray to its normal position. Be sure it snaps into place. The gray wire must be secured under the black plastic clip.

13. Return each ice sensor to its normal position. Be sure no wires are pinched in the mounting sockets.

14. Return the lower splash panel to its normal position.

15. Return the evaporator cover to its normal position.

16. Push and release the Freeze button.

17. Return the front panel to its normal position.

Ice Sensor Diagnostics

Diagnostics assume that the control system is working but may not be able to sense cubes. Its purpose is to determine which component may be at fault - the controller or the ice sensors.

Unplug thermostat from terminal 7 of the controller and check bin full light, if off place an object between the ice sensors, after 5 seconds the Bin Full light will be glowing steadily, if not check operation of sensors by unplugging #4. Bin Full light will go on after 5 seconds, If not, replace controller. If the light does go on, replace ice sensor set.

Water Level Sensor Maintenance

In most cases the water level sensor will not require maintenance. However, if the area where the ice making section is located is dusty or there is a high concentration of minerals in the water, the infrared emitter and detector lenses inside the sensor may need to be wiped off.

1. Remove front panel.

2. Push and hold the Off button until the machine stops.

3. Unplug sensor wire harness from sensor.

4. Remove two screws holding dust cover to sensor.

5. Wipe the four lenses with a cotton swap soaked in potable water.

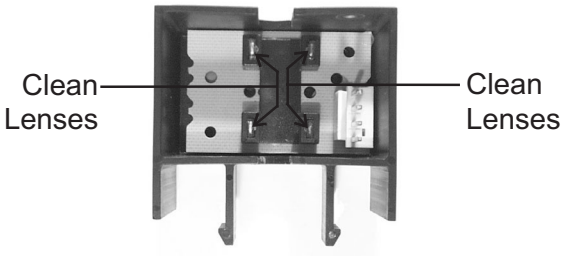

Water Level Sensor, Dust Cover Removed

6. Return the dust cover to its original position, secure with the original screws.

7. Reconnect wire harness.

8. Push and release the Freeze button.

9. Return the front panel to its normal position.

Water Level Sensor Diagnosis

Tools Needed: Digital voltmeter that can read DC

Note: Ambient light can affect this test. Shade the sensor if needed.

1. Unplug water sensor harness from controller (connection #2).

2. Confirm that the power to the machine is ON and that there is at least one light on the board that is glowing. If not, check the transformer.

3. Set the voltmeter to DC and use a scale low enough to measure less than 40 Volts.

4. Measure the voltage between the top and the bottom pins on the controller at connection #2 (the bottom is ground or negative).

- **Harness unplugged - .5 to 2 VDC**

If it is much less than that, there is something wrong with either the power supply to the controller or the controller itself. If the voltage measures correctly proceed to the next step.

5. Reconnect the harness. Be SURE it is on properly and has a good connection. To confirm, unplug the harness from the water sensor and redo step #4 at the end of the harness. Then plug the harness back onto the sensor.

Harness Connected Voltage (DC)

6. At the controller, measure the voltage between the top and bottom pins on connection #2. This should be between the ranges in the table below. If it outside this range there is a problem in the sensor and it should be changed out. If it is within this range, proceed to the next step.

7. Place negative voltmeter probe on the bottom terminal (yellow wire). Place the other on the one just above it (terminate freeze sender - white wire). Move the float stem/stick up and down and note the voltage changes. There should be a significant change between when it is blocked to when it is not blocked. If there is **NO change**, the sensor may be dirty or has failed. Remove the dust cover from the sensor to clean it.

Note: The sensor must be properly reassembled. When looking at the terminals of the sensor, they must be in the lower right corner. If they are in the upper left remove the sensor's dust cover and reverse the board. Later models have an UP arrow on the right side of the circuit board.

	Yellow (bottom)
White - Blocked	about 5 VDC
White - Unblocked	less than when blocked

8. With the voltmeter probe still on the bottom terminal (connection #2), place the other probe on the second pin from the top (sump full sender - red wire). Move the float stick up & down, changes in voltage should be the same as in step 7.

	Yellow (bottom)
Red - Blocked	about 5 VDC
Red - Unblocked	less than when blocked

9. If all voltages check out, there is nothing wrong with the sensor or the voltage it receives from the controller.

Service Diagnosis

Problem or Symptom	Possible Cause	Probable Correction
No ice	No power to ice making section	Restore power
	No power to condensing unit	Restore power
	No lights on controller	Check transformer
	Unit manually switched off	Push and release the Freeze button, ask user why it was shut off
	Power to both sections, controller reset, but condensing unit does not operate	Interconnecting control wire disconnected, reconnect it
		Low or high pressure cut outs open, check system pressures
	No water to ice making section, controller blinking water light twice and repeating	Restore water supply, check water filters, reset controller
		Check inlet water valve operation
		Check water level sensor operation, including harness between sensor and controller*
	Ice making section has exceeded maximum freeze time and controller has shut down the system	Condenser coils may need cleaning
		Check condenser fan blade and motor
		Check for excessive air intake temperatures at condenser coil
		Check compressor contactor
		Check compressor and starting components
		Check water pump
		Check purge valve for leak through
		Check vapor inlet valve for leak though
	Ice making section has exceeded maximum harvest time and shut down the system	Check ice making section for lime scale build up, clean as needed
		Check condenser by pass valve
		Check vapor inlet valve*
		Check headmaster
		Check ice sensors for cube sensing*
		Check inlet water valve for leak through
		Check for obstruction in ice delivery chute
	Bin full light is on but bin is not full	Check ice sensors*
		Check thermostat*

* Additional diagnostics for this component are on the following pages

Service Diagnosis

Problem or Symptom	Possible Cause	Probable Correction
No ice	No refrigeration, unit shut down and refrigeration diagnostic light is on without blinking	Check compressor, refrigerant charge, and liquid inlet valve. Note that if liquid inlet valve is not open, compressor will pump down and suction pressure will be very low.
No water to ice making section	Water level sensor or harness not working properly	Replace harness or sensor
Slow ice release during harvest	Cubes are too large	Check inlet water valve for leak through
		Check float for sticking
	Condenser by-pass valve does not open	Check coil of valve
		Check power to valve during harvest
No ice sensed during harvest	Ice sensing system failure	Check sensing system by pouring about 10 ice cubes through the ice outlet port. The bin full light should blink, indicating that it has sensed the ice. If not, check the sensors.
		Check the ice sensors. Place an object between the ice sensors, after 5 seconds the Bin Full light will be glowing steadily, if not check operation of sensors by unplugging #4. Bin Full light will go on after 5 seconds, If not, replace controller. If the light does go on, replace ice sensor set.
	No ice released to bin	Ice outlet blocked - check for obstruction
	No ice released, vapor inlet valve does not open	Check coil for continuity, if open replace coil
		Check for 24 volts to coil during harvest, if non, check at controller
		Check low side pressure, if pressure does not rise during harvest, and valve is electrically OK, replace vapor inlet valve

Service Diagnosis

Problem or Symptom	Possible Cause	Probable Correction
Low capacity	Dirty condenser	Clean condenser
	Air temperature intake to condenser very high	Re-orient condenser to avoid hot air intake
	Water temperature intake to ice making section very high	Check for hot water supply to ice machine due to mal-functioning or non-existent hot water check valve at dishwashing sink
	False bin full - bin full light is ON and the bin is not full	Unplug thermostat from terminal 7 and check controller. Bin full light must go out within 4 minutes or ice sensors need checking.
		Check ice sensors for proper position
		Check ice sensors for scale build up
	Storage bin or dispenser not holding ice properly	Check drains for water flow from ice machine (separate to correct) or restriction
	High volume of drinks dispensed, cold plate melting ice	Suggest pre-cooler for water supply to cold plate
	Vapor inlet valve leaks through slightly during the freeze cycle	Check valve body for similar temperatures on inlet and outlet, the outlet should be colder and frost develops on the tubes to the evaporators
	Splash shield missing/out of position and water is cascading out of the reservoir	Install or re-secure splash shield. Check water distributors for proper attachment.
	Exceeding maximum freeze time, compressor unit trips on high discharge temp	Check condenser bypass valve
Poor ice formation - very cloudy and misshapen	Dirty water system	Clean the water distributors and the tops of the evaporators to remove built up mineral scale
	Low refrigerant charge.	Add several pounds of refrigerant to check. If low on charge, locate leak. Recover refrigerant, repair leak, replace drier, evacuate to 300 microns and weigh in the nameplate charge.
Whistling noise at CP unit during harvest	By pass and liquid inlet valve coils not getting power	Check harness

Controller Features & Last Error Recall

Last Error/Diagnostic Light Recall

To recall the last error on the blue housing CM[3] controller:

1. Switch the unit OFF by holding the OFF button for longer than 3 seconds.

2. Hold the Off button down again until the Purge Setting indicators (Green Lights) are on.

3. Push and release the Harvest button.

The last error code stored in the controller will be displayed and the purge setting will disappear.

Push the Harvest button again and the second-to-last error code will be displayed. The bin full light will also be on to signal that this is the second-to-last code.

Pushing the Harvest button again will display the last error code again. Only two error codes are available for display.

If no error code exists, no code will be displayed and there will be NO LIGHTS showing.

To return from the display of the last error, do nothing for 60 seconds or push and hold the Off button.

After returning from the display of the last error (Off light glows), the machine may be returned to the ice making process by pushing and releasing the Freeze button.

Controller Diagnostic Codes

If a Diagnostic Light	Water Light	Refrigeration Light
Blinks once and repeats	Water pump will not start	Very long ice harvest
Blinks twice and repeats	Lack of water fill	No harvest of ice
Blinks three times and repeats	not used	High discharge temperature
Is ON all the time	Water valve leaking thru rapidly	Maximum freeze time
Both ON all the time	Check for thermistor set unplugged or failed	

Program ID

The blue housing controller will display a code at power up that indicates which ice machine model it has been programmed for.

The code is based on the green lights that are displayed.

1. At power up all lights flash ON once to indicate that the controller has passed its internal self-checks.

2. Immediately after that the program code will be displayed for 20 seconds or until a button is pushed.

Note: The **proper** program code for this machine is glowing

- CME1386: Bin Full and Freeze
- CME1686: Bin Full, Freeze and Clean

Do NOT operate this machine if the wrong code is displayed.

3. If no button is pushed after 20 seconds the machine will display the Off light and is ready for switch inputs (push and release Freeze to start making ice).

Note: The Red Diagnostic Lights will be FLASHING while the program ID is displayed.

Eclipse™ 1300, 1600

Operational Characteristics 1300 lb system

Cycle Times @ Condenser Temp/Cabinet Temp/Water Temp in degrees F

	70/70/50	90/90/70	120/110/100
Freeze	12 to 13 minutes	16 to 17 minutes	26 to 28 minutes
Harvest	3 minutes	2 minutes	1 minute

System Pressures @ Condenser Temp/Cabinet Temp/Water Temp in degrees F.

	70/70/50	90/90/70	120/110/100
Suction at Ice Making Section, end of Freeze	30 to 34 PSIG	32 to 36 PSIG	40 to 44 PSIG
Suction at Ice Making Section, Harvest	70 to 80 PSIG	90 to 110 PSIG	120 to 140 PSIG
Discharge at Condensing Unit: Freeze	230 to 250 PSIG	250 to 270 PSIG	370 to 390 PSIG

Headmaster maintains a minimum discharge pressure during freeze of:

- 217 PSIG + 25, -15 PSIG

CPR Valve Setting: 55 - 60 PSIG.

Note: CPR allows a maximum low side pressure at the CP unit's compressor. Maximum only occurs during harvest.

Refrigerant Charge

- 288 oz

Compressor Amps

- Single Phase - 15
- Three Phase - 8

Batch Weight

- 16 lb

Discharge Pressure Cut Out Switch

- Cuts Out at: 450 PSIG
- Resets at: 350 PSIG

Compressor: CS20K6E

Expansion Valves: 1

Operational Characteristics 1600 lb system

Cycle Times @ Condenser Temp/Cabinet Temp/Water Temp in degrees F.

	70/70/50	90/90/70	120/110/100
Freeze	15 to 16 minutes	17 to 18 minutes	28 to 29 minutes
Harvest	2 ½ minutes	1 ½ minutes	1 ½ minutes

System Pressures @ Condenser Temp/Cabinet Temp/Water Temp in degrees F

	70/70/50	90/90/70	120/110/100
Suction at Ice Making Section, end of Freeze	35 to 37 PSIG	35 to 37 PSIG	40 to 44 PSIG
Suction at Ice Making Section, Harvest - Peak	70 to 80 PSIG	80 to 100 PSIG	120 to 140 PSIG
Discharge at Condensing Unit: Freeze - 5 minutes in	230 to 250 PSIG	250 to 270 PSIG	370 to 390 PSIG

Headmaster maintains a minimum discharge pressure during freeze of:

- 217 PSIG + 25, -15 PSIG

CPR Valve Setting: 55 - 60 PSIG.

Note: CPR allows a maximum low side pressure at the CP unit's compressor. Maximum only occurs during harvest.

Refrigerant Charge

- 288 oz

Compressor Amps

- Single Phase - 15
- Three Phase - 8

Batch Weight: 19 - 20 lb

Discharge Pressure Cut Out Switch

- Cuts Out at: 450 PSIG
- Resets at: 350 PSIG

Compressor: CS20K6E

Expansion Valves: 1

Recovery

Recovery must be done from the condensing unit, but requires the ice machine to be shut down.

1. At the ice making section, remove the front panel.

2. Push and release the Harvest button. When the machine shuts off, recover the refrigerant.

3. Remove compressor package covers.

4. Attach recovery system to low side (compressor process port valve)

5. If the recovery system can recover liquid, attach recovery system to high side (receiver liquid line out valve)

Operate recovery system to remove refrigerant from the system. No other points of attachment or solenoid activation are required.