CME1056 Service Parts

This is the parts list for the CME1056 ice machine. The CME1056 was manufactured in A, D, E and F series, as well as single phase 60 Hz, single phase 50 Hz, and three phase.
The E series change was to side panels for water cooled models. The F series change was to the water cooled condenser.
In order to obtain the correct part, always confirm the model number and voltage of the machine the part is being ordered for and compare that information to the description of the part.

Table of Contents

Cabinet 2

Freezing Chamber Components 3

Interior Components 4

Air Cooled Refrigeration 5

Air Cooled Condenser & Fan Motor 6

Water Cooled Refrigeration 7

Water Pump and Valves 8

Water System 9

Electrical 10

Ice Storage Bin, HTB555 11

Single Phase Wiring Diagram, D - F Series 12

Single Phase Schematic Diagram, D - F Series 13

Three Phase Wiring Diagram, D - F Series 14

Single Phase Wiring Diagram, A Series 15

Single Phase Schematic Diagram, A Series 16

Three Phase Wiring Diagram, A Series 17

Three Phase Schematic Diagram 18

CME1056 Service Parts

Cabinet

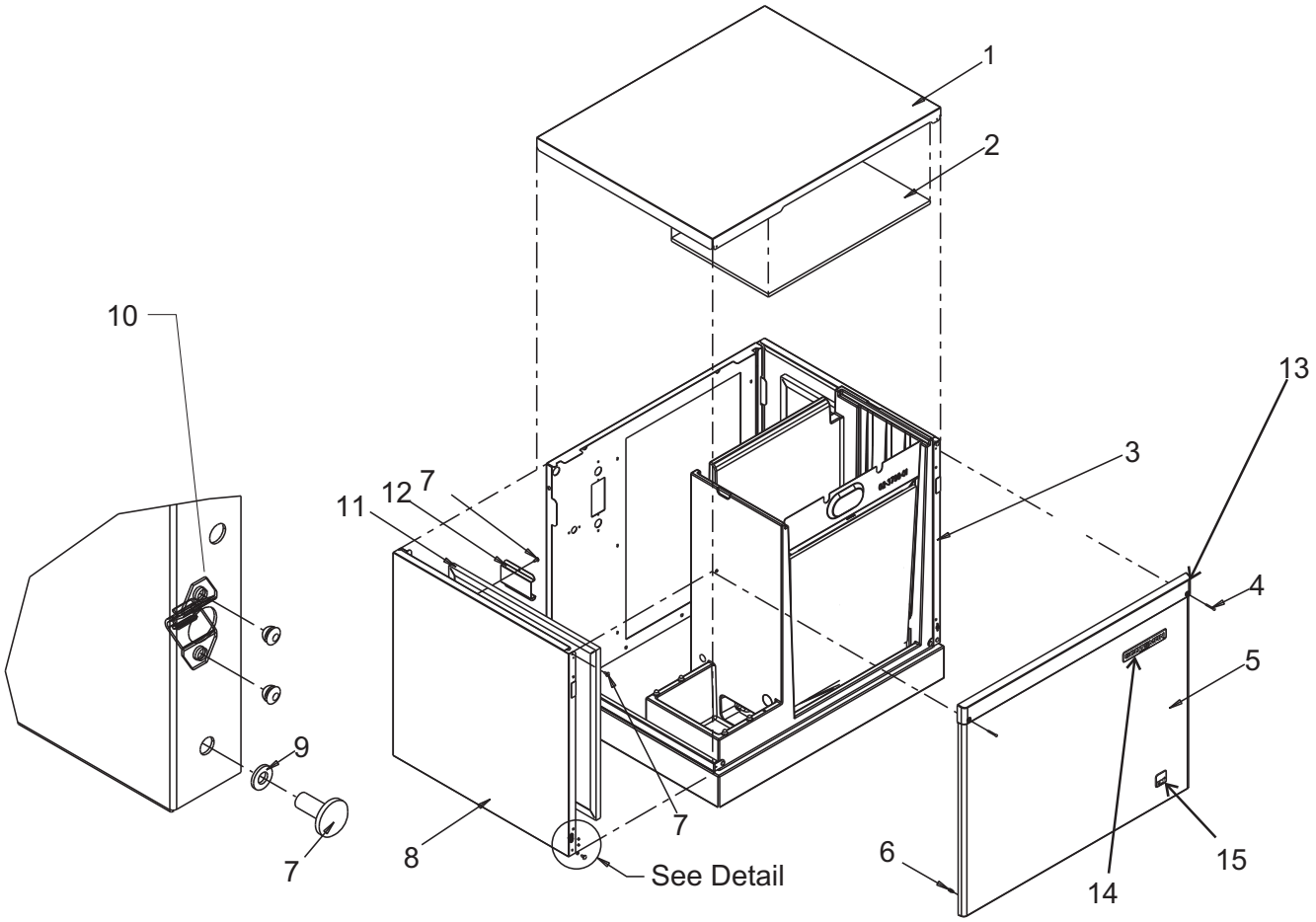

Item Number	Page Number	Description			
1	A35965-001	Top panel, painted			
	A35965-002	Top panel, stainless steel			
	02-3822-22	Top panel, plastic (D series and up) - **03-1423-06** is the speed nut for this panel.			
2	02-3783-01	Insulation			
3	A35963-021	Air cooled right side panel, painted			
	A35963-022	Air cooled rlght side panel, stainless steel			
	A37071-021	Water cooled right side panel, painted			
	A37071-022	A - D series water cooled right side panel, stainless steel			
	A38126-021	E and higher series water cooled right side panel, stainless steel			
4	03-1735-01	Front panel screw			
5	02-3797-21	Plastic front panel, includes 13, 14, and 15			
	A37488-021	Stainless steel front panel, includes 13, 14 and 15			
6	03-1733-01	Ball stud (strike)			
7	03-1531-01	Screw			
8	A35962-021	Air cooled left side panel, painted			
	A37070-021	Water cooled left side panel, painted			
	A35962-022	Air cooled left side panel, stainless steel			
	A37070-022	A - D series water cooled left side panel, stainless steel			
	A38127-021	E and higher series water cooled left side panel, stainless steel			
9	03-1417-27	Lockwasher	10	03-1733-02	Catch
11	02-3485-01	Air filter	12	A37326-001	Bracket
13	02-3794-01	Trim strip. **03-1731-02** Retainers for trim strip			
14	15-0808-03	Scotsman emblem	15	15-0792-02	CM^3 emblem

CME1056 Service Parts

Freezing Chamber Components

Item Number	Part Number	Description
1	A37370-021	Evaporator set (3)
2	02-3765-01	Cascading shield
3	11-0540-21	Ice sensor set
4	A37759-002	Water compartment
5	02-3798-01	Evaporator cover
6	02-3810-01	Insulation for evap cover
7	02-3337-02	Ice deflector
8	03-1691-01	Nylon screw
9	02-3782-01	Bin stat plug
10	02-3779-02	Evap seal
11	02-3779-03	Evap seal
12	02-3778-01	Trough, back evap only

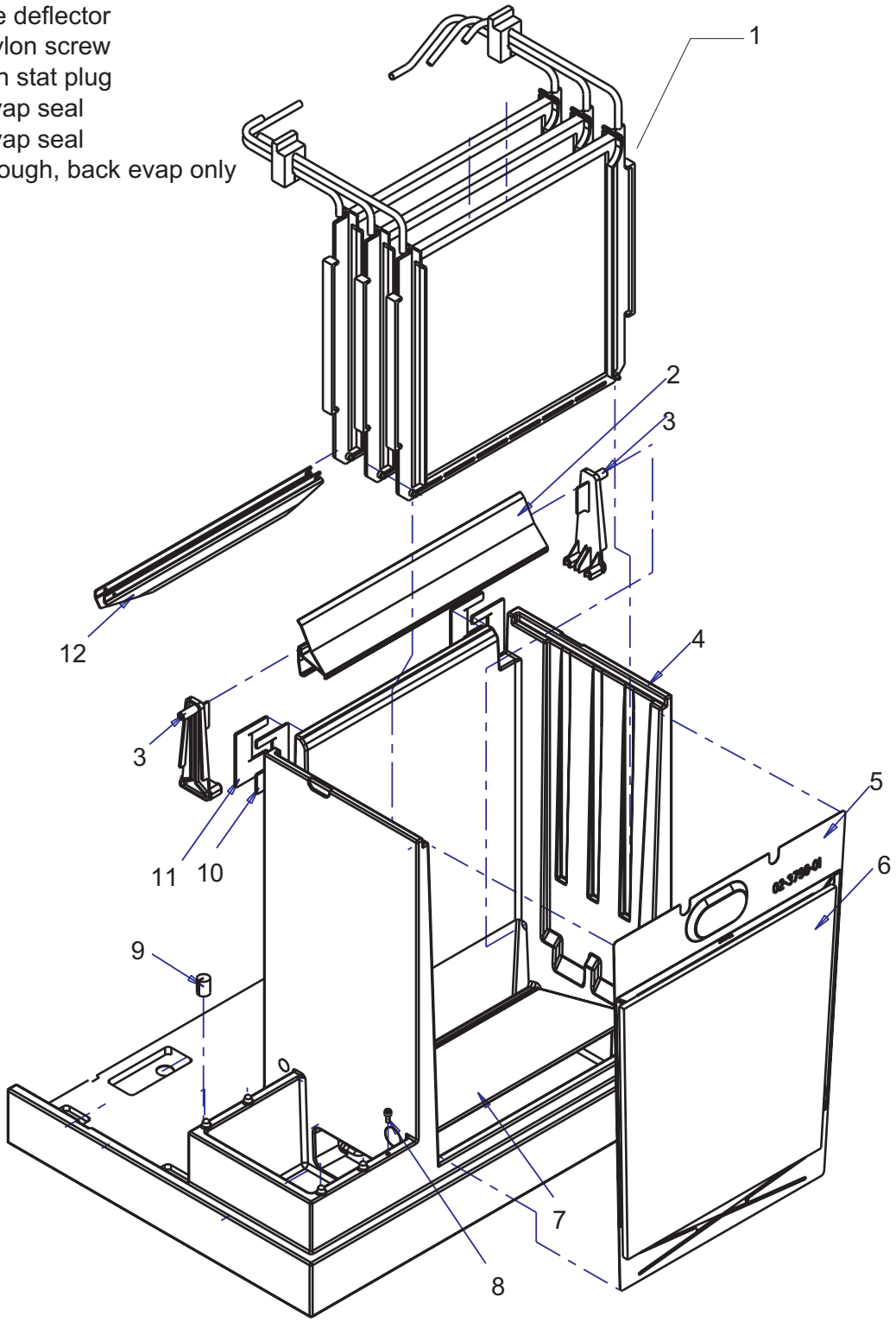

CME1056 Service Parts

Interior Components

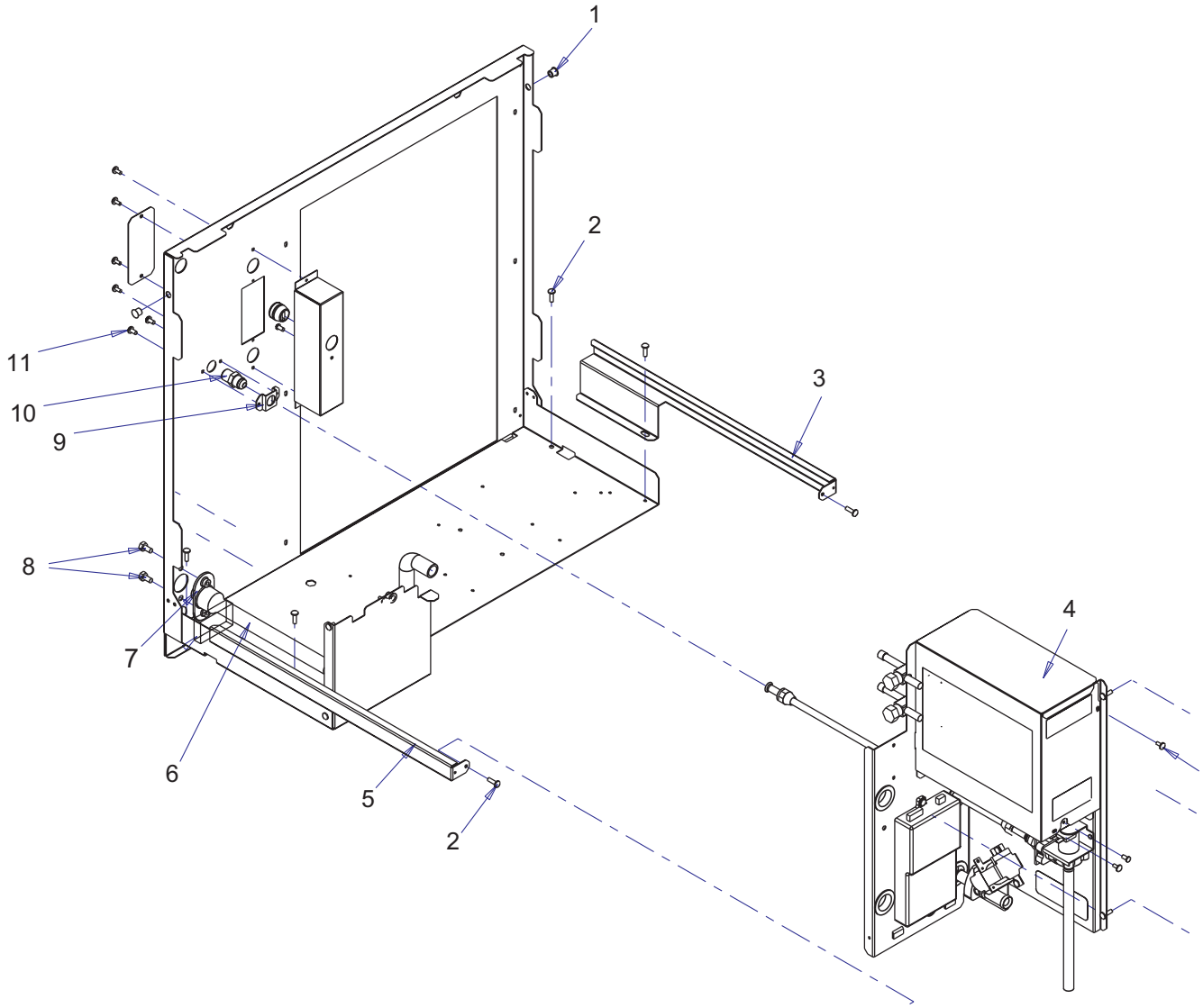

Item Number	Part Number	Description
1	02-1875-03	Hole plug
2	03-1404-18	Screw
3	A37400-001	Right channel
4	A37468-001	Control box cover
5	A37399-001	Left channel
6	02-3763-01	Drain hose
7	02-3692-21	Drain fitting w/screws
8	03-0571-00	Screw
9	A37232-001	Fitting bracket
10	16-1036-01	Inlet fitting
11	03-1531-01	Screw

CME1056 Service Parts

Air Cooled Refrigeration

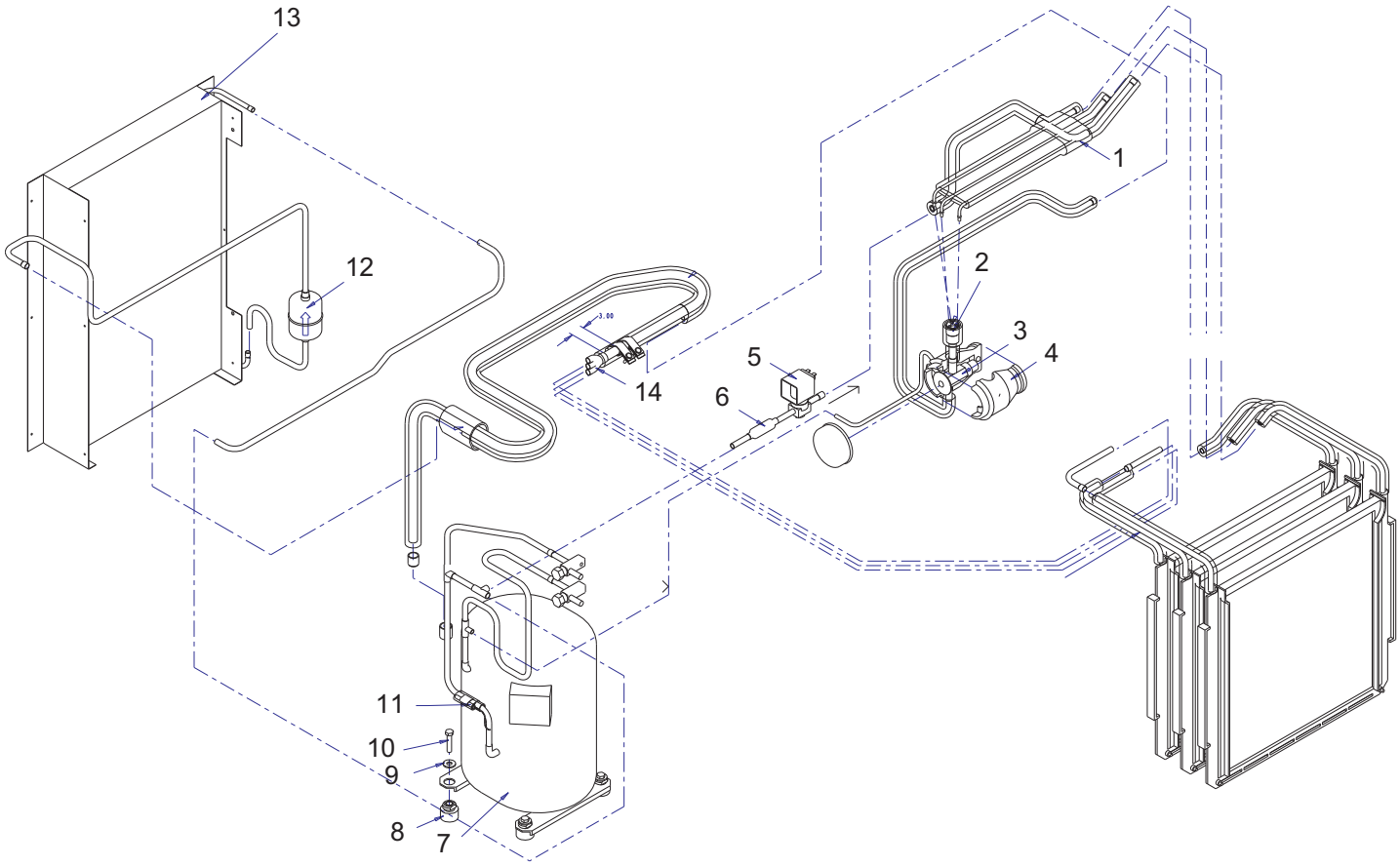

Item Number	Part Number	Description
1	16-1051-01	Hot gas header
2	16-1058-01	Distributor
3	16-1076-21	TXV
4	02-4406-01	TXV insulation
5	12-2471-24	Hot gas valve - 4T3
	12-2719-23	Hot gas valve coil only
	12-2733-30	Hot gas valve repair kit, no coil, no body
6	16-1063-01	Hot gas valve strainer
7	18-8749-22	Compressor. 208-230/60/1 CS14K6E-PFV-276
	18-8749-24	Compressor. 208-230/60/3 CS14K6E-TF5-276
	18-8749-27	Compressor. 220-240/50/1 CS14K6E-PFJ-276

All compressors include a drier. Single phase also include starting components. All overloads are internal.

8	18-2300-27	Mounting grommet
	18-2200-27	Mounting sleeve
9	03-1407-07	Washer
10	03-1405-20	Cap screw
11	02-3410-21	Discharge temp sensor (with water temp sensor)
12	02-3319-02	Drier
13	18-8824-21	Air cooled condenser

CME1056 Service Parts

Air Cooled Condenser & Fan Motor

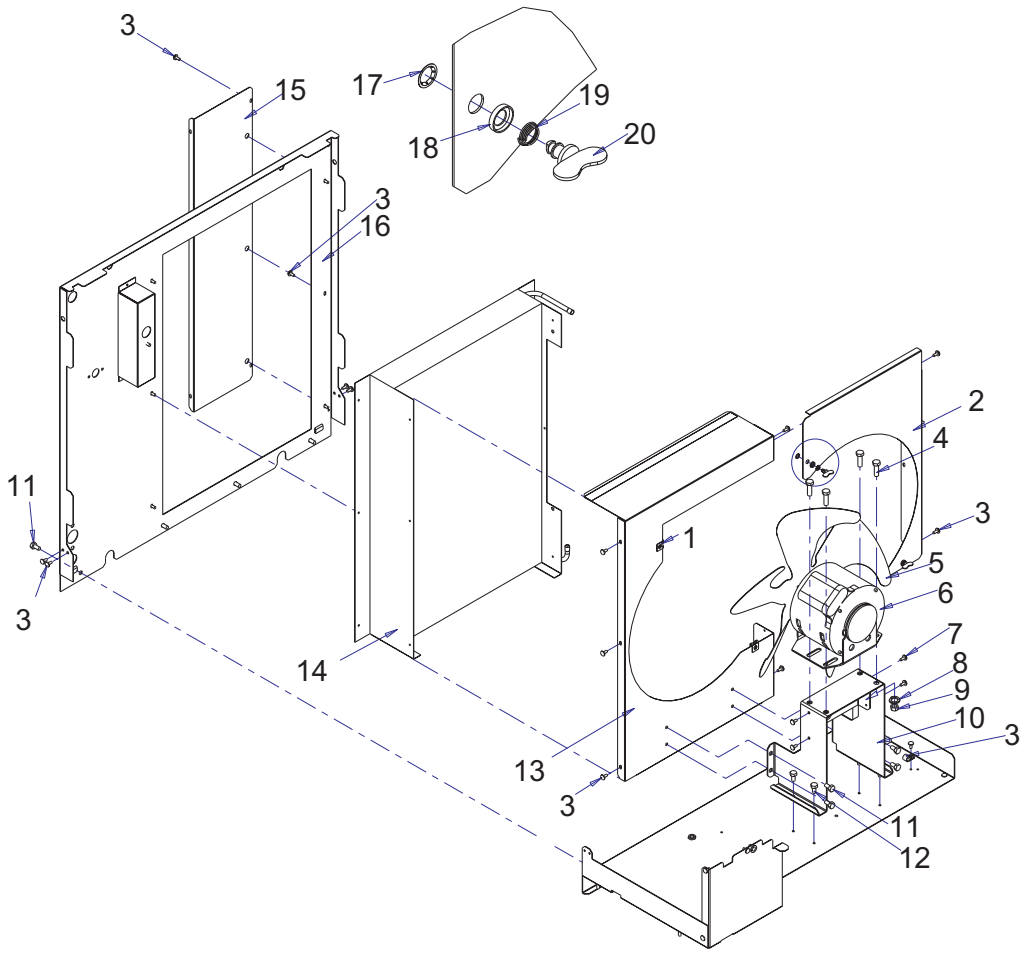

Item Number	Part Number	Description
1	03-1731-05	Clip
2	A37376-001	Shroud top
3	03-1531-01	Screw
4	03-1251-01	Hex bolt
5	18-8765-03	Fan blade
6	18-8830-21	Fan motor, 1100 RPM
7	03-1638-03	Screw
8	03-1410-04	Lockwasher
9	03-1406-10	Hex nut
10	A37382-001	Fan bracket
11	03-1645-01	Screw
12	03-1732-01	Screw
13	A37381-001	Shroud
14	18-8824-21	Air cooled condenser
15	A37417-001	Baffle
16	A37372-001	Back panel
17	03-1731-02	Push on retainer
18	03-1731-04	Washer
19	03-1731-03	Spring
20	03-1731-01	Wing screw

CME1056 Service Parts

Water Cooled Refrigeration

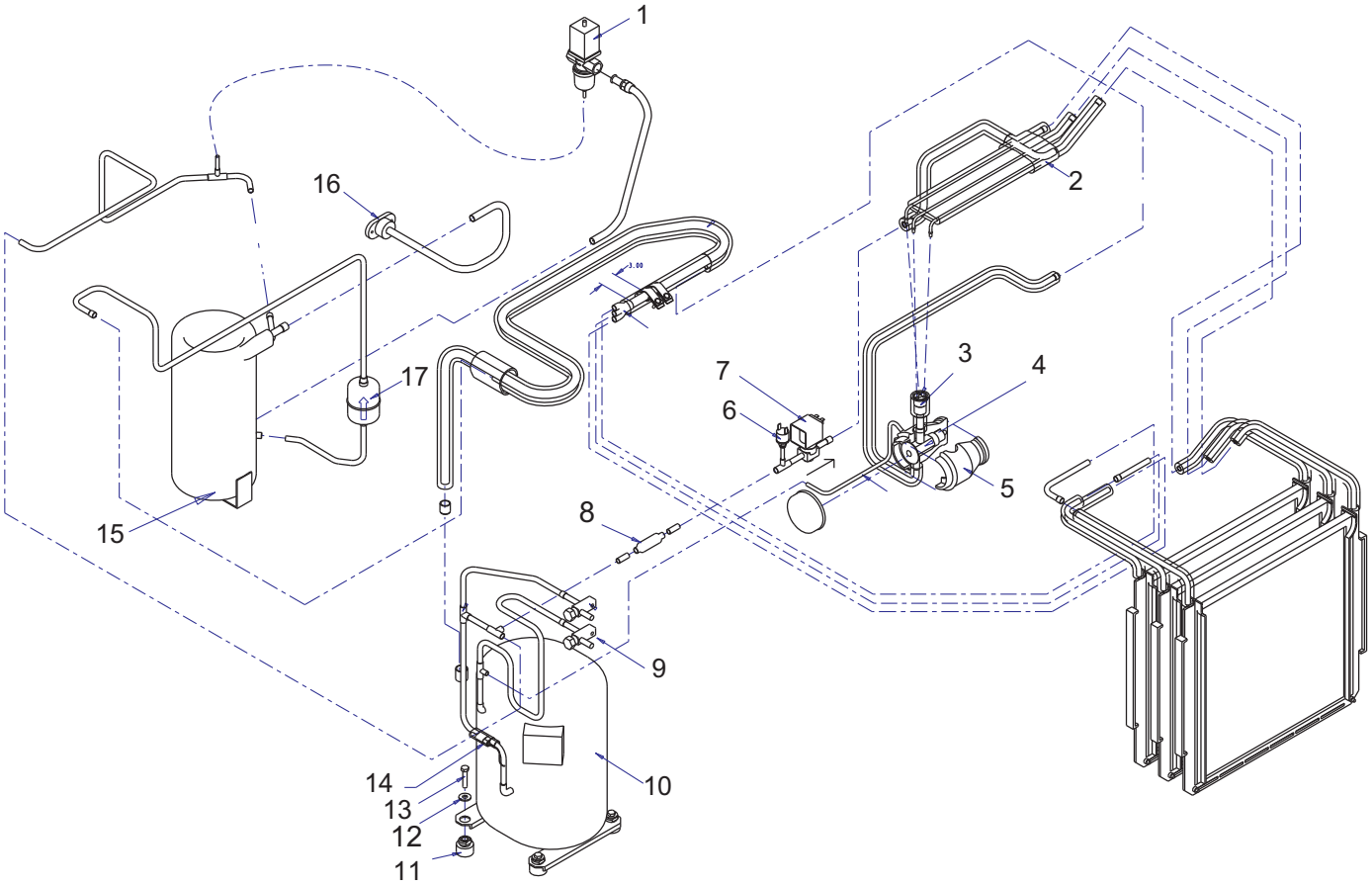

Item Number	Part Number	Description
1	11-0608-21	Water reg. valve
2	16-1051-01	Hot gas header
3	16-1058-01	Distributor
4	16-1076-21	TXV
5	02-4406-01	TXV insulation
6	11-0501-21	Hi pressure cut out
7	12-2471-24	Hot gas valve - 4T3
	12-2719-23	Hot gas valve coil only
	12-2733-30	Hot gas valve repair kit, no coil, no body
8	16-1063-01	Hot gas valve strainer
9	16-0832-21	Access valve
	16-0832-03	Port cap
	16-0832-02	Stem cap
10	18-8749-22	Compressor. 208-230/60/1 CS14K6E-PFV-276
	18-8749-24	Compressor. 208-230/60/3 CS14K6E-TF5-276
	18-8749-27	Compressor. 220-240/50/1 CS14K6E-PFJ-276

All compressors include a drier. Single phase also include starting components. All overloads are internal.

Item Number	Part Number	Description
11	18-2300-27	Mounting grommet
	18-2200-27	Mounting sleeve
12	03-1407-07	Washer
13	03-1405-20	Cap screw
14	02-3410-21	Discharge temp sensor
15	18-6900-25	**A** thru **E** series water cooled condenser
	18-8874-21	**F & up** series water cooled condenser
16	A31828-003	Drain casting
Not Shown:		
17	A37373-001	Back panel for water cooled

CME1056 Service Parts

Water Pump and Valves

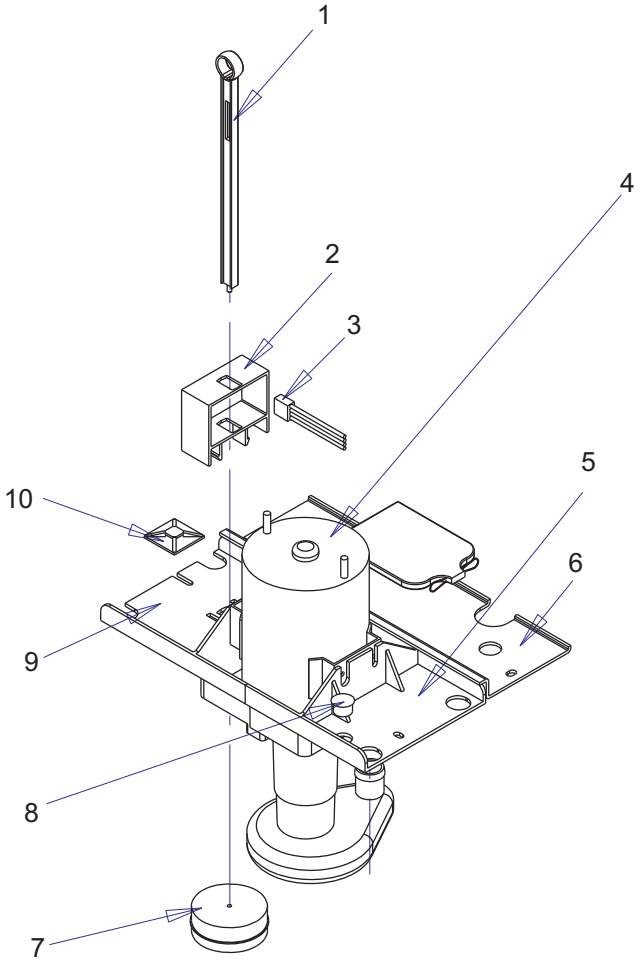

Item Number	Part Number	Description
1	02-3777-01	Float stick
2	11-0539-51	Water level sensor
3	12-2506-01	Harness
4	12-2714-21	Water pump - 208-230
5	02-3388-06	Pump bracket
6	02-3764-01	Sump cover
7	02-3341-01	Float
8	02-1875-05	Hole plug
9	02-3388-04	Pump bracket
10	03-1736-01	Mount for cable tie

CME1056 Service Parts

Water System

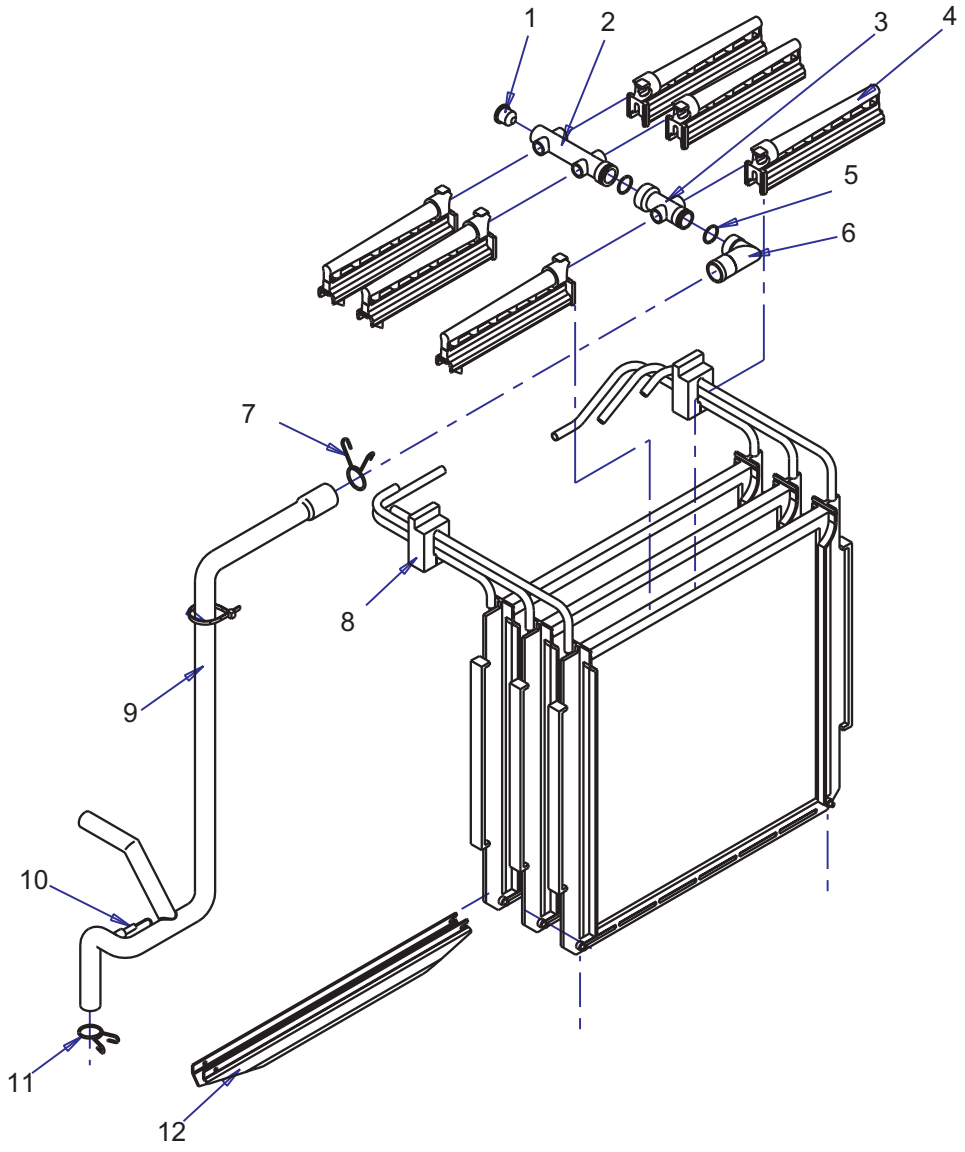

Item Number	Part Number	Description
1	13-0840-01	Plug
2	02-3518-01	Manifold
3	02-3519-01	Manifold
4	02-2527-01	Water distributor
5	13-0617-48	O ring
6	02-3613-01	Elbow
7	02-3791-01	Hose clamp
8	02-3779-01	Grommet
9	02-3762-01	Pump hose
10	02-3410-21	Water temp sensor (with discharge temp sensor)
11	02-3725-01	Hose clamp
12	02-3778-01	Trough, for back plate only

CME1056 Service Parts

Electrical

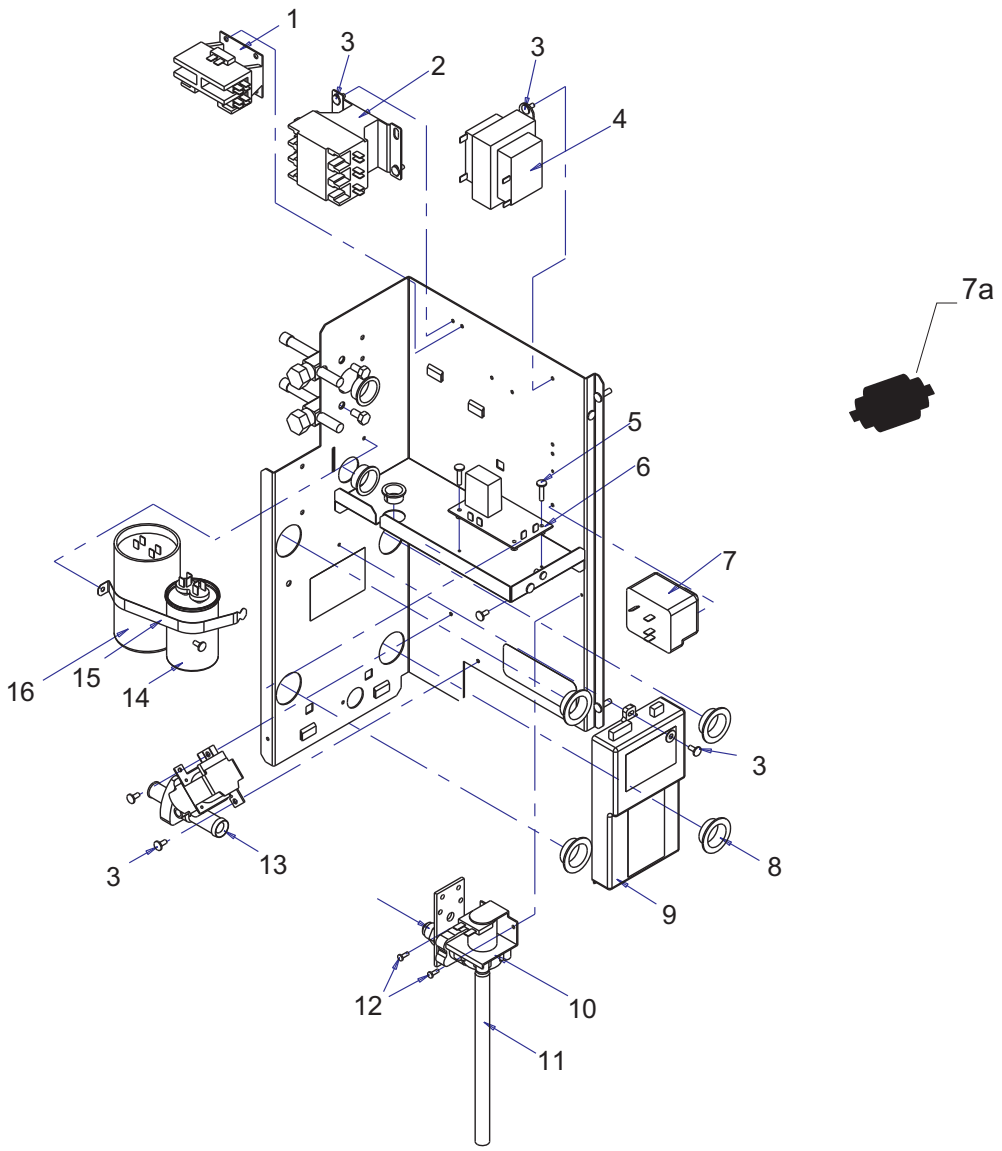

Item Number	Part Number	Description
1	12-2469-01	Single phase contactor
2	12-2533-01	Three phase contactor
3	03-1531-01	Screw
4	A37217-001	Transformer
5	03-1638-01	Screw
6	11-0531-21	Purge valve timer
7	18-1903-46	60 Hz compressor relay
	18-1903-33	50 Hz compressor relay
7a	18-8835-01	PTCR D and up series
8	12-1213-12	Snap bushing
9	12-2838-24	Controller
10	12-2666-01	Inlet water valve
11	13-0674-02	Tube, order 1 unit. Cut to 8 in.

Item Number	Part Number	Description
12	03-1404-05	Screw
13	11-0514-01	Purge valve
14	18-1902-55	Run capacitor
15	A37366-001	Strap
16	18-1901-48	Start capacitor
Not Shown		
17	12-2713-01	Lo volt harness, A series
	12-2818-01	Lo volt harness, D+ series
18	12-2476-01	Hi volt harness, A series
	12-2784-01	Hi volt harness, D+ series
Bin Thermostat System Components		
19	11-0521-21	Bin thermostat
20	02-3740-01	Bracket
21	03-1675-03	Knob
22	12-2701-01	Bin thermo harness
23	12-2699-01	Stacking kit harness

CME1056 Service Parts

Ice Storage Bin, HTB555

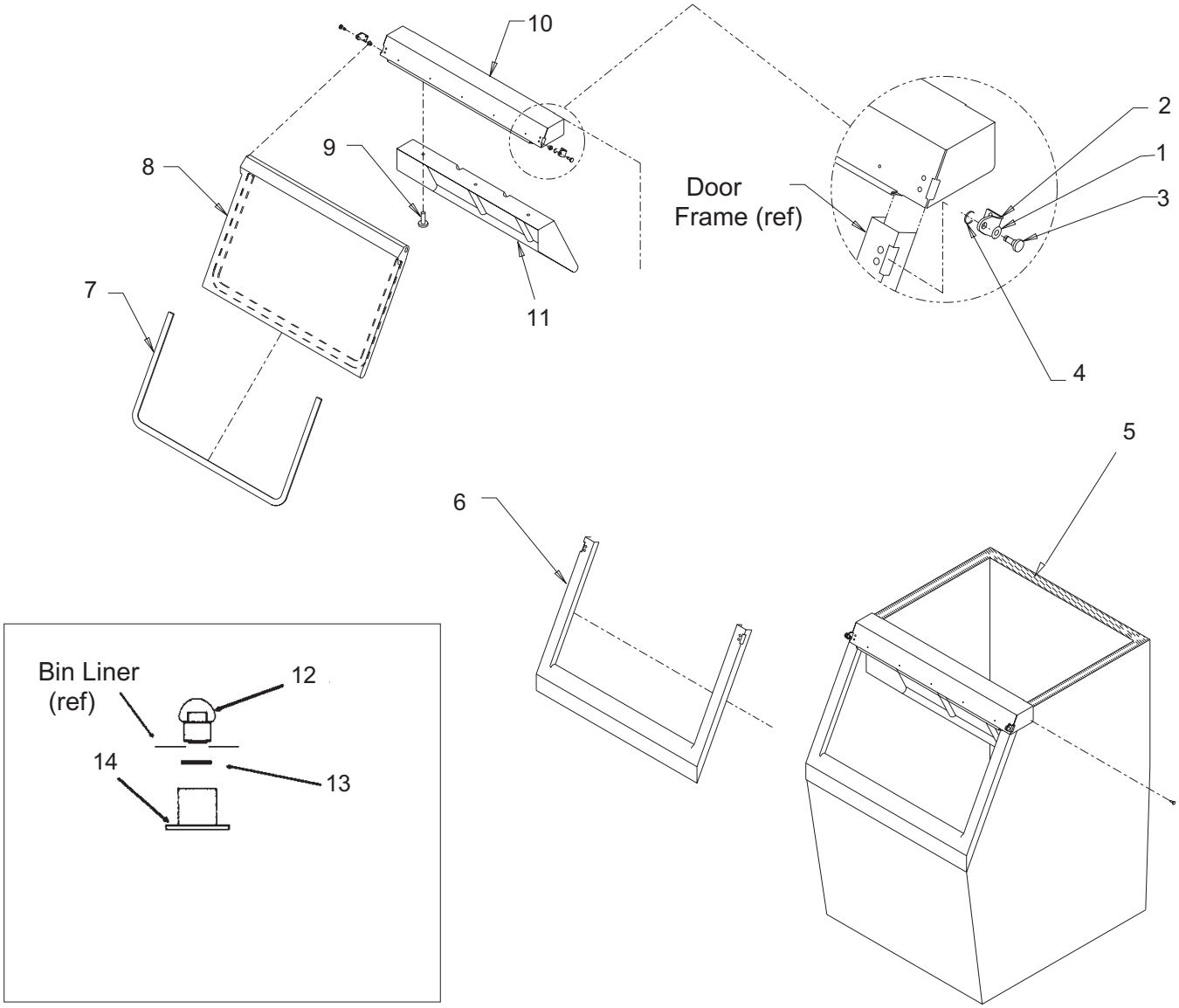

Item Number	Part Number	Description
1	02-2380-02	Spacer
2	02-3196-01	Hinge
3	02-2806-01	Shoulder screw
4	03-1539-09	E-ring
5	19-0503-04	Gasket 9 ft. *
6	02-3274-02	Door frame (grey)
7	13-0909-01	Door gasket - 58" *
8	A36481-022	Door, grey, includes #7.
9	03-0727-11	Thumb screw
10	A35637-001	Canopy
11	A37310-001	Baffle
12	02-2809-02	Drain top
13	13-0617-09	O-ring
14	02-3108-01	Drain bottom

* Order gasket by the foot.

Not shown

03-1404-07	Screw for drain bottom
05-0586-01	Drain elbow
02-0540-00	Scoop
KLP2E	Enamel leg kit

Single Phase Wiring Diagram , D - F Series

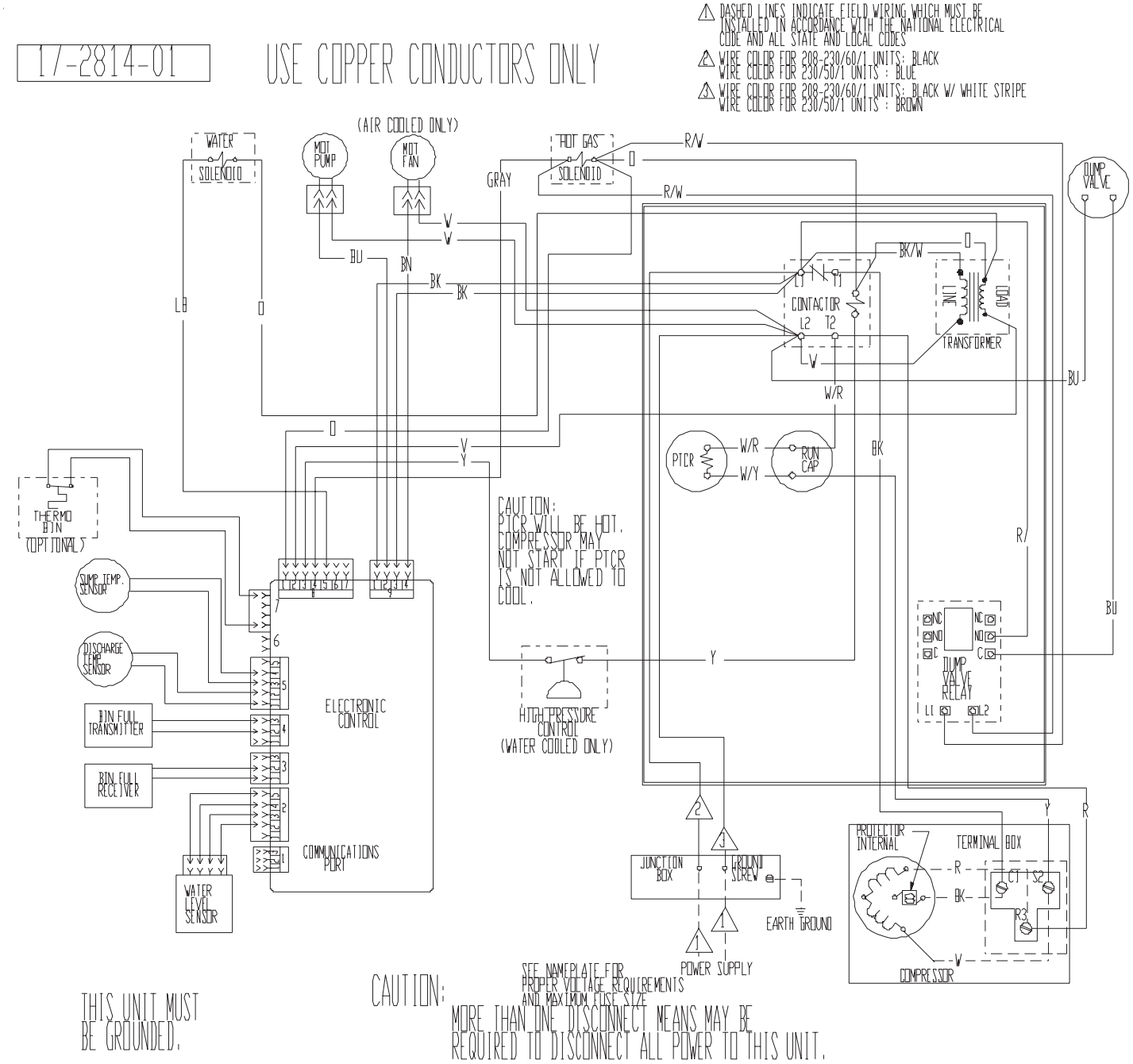

CME1056 Service Parts

Single Phase Schematic Diagram, D - F Series

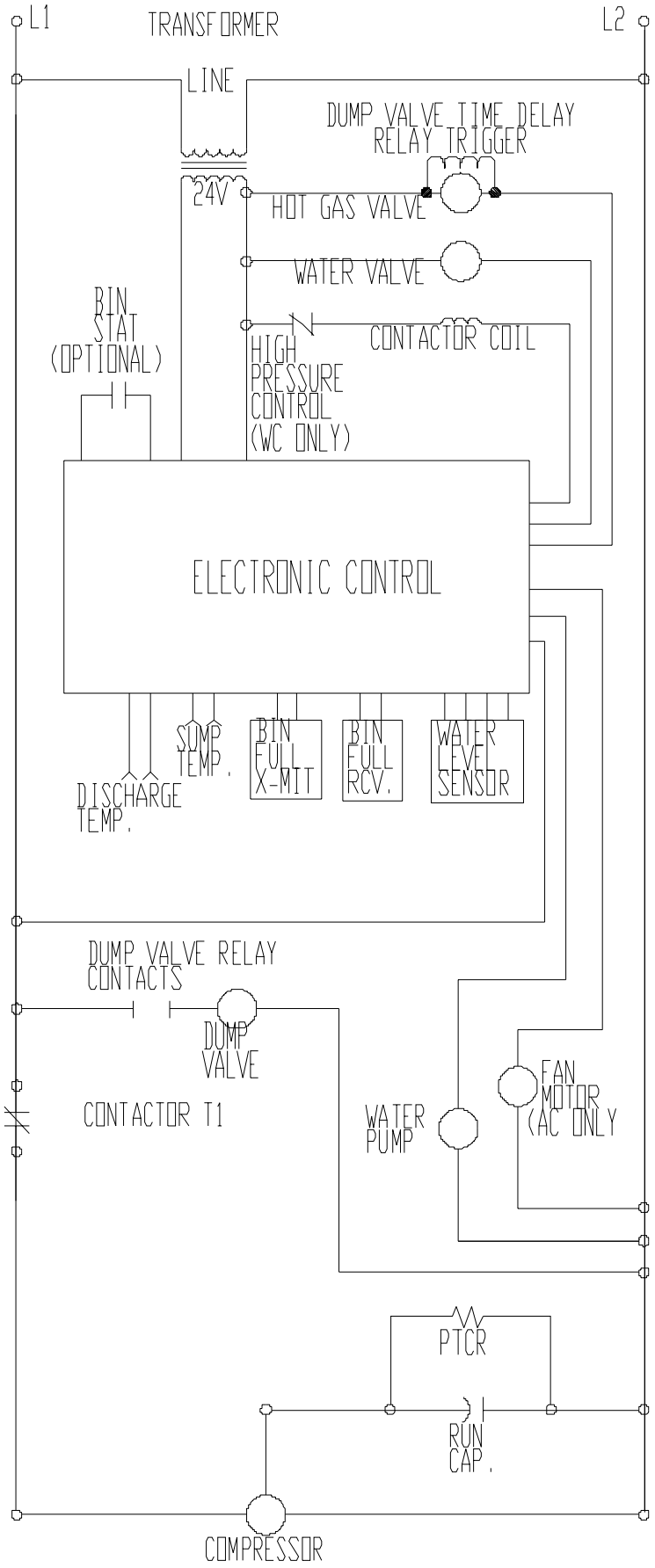

CME1056 Service Parts

Three Phase Wiring Diagram, D - F Series

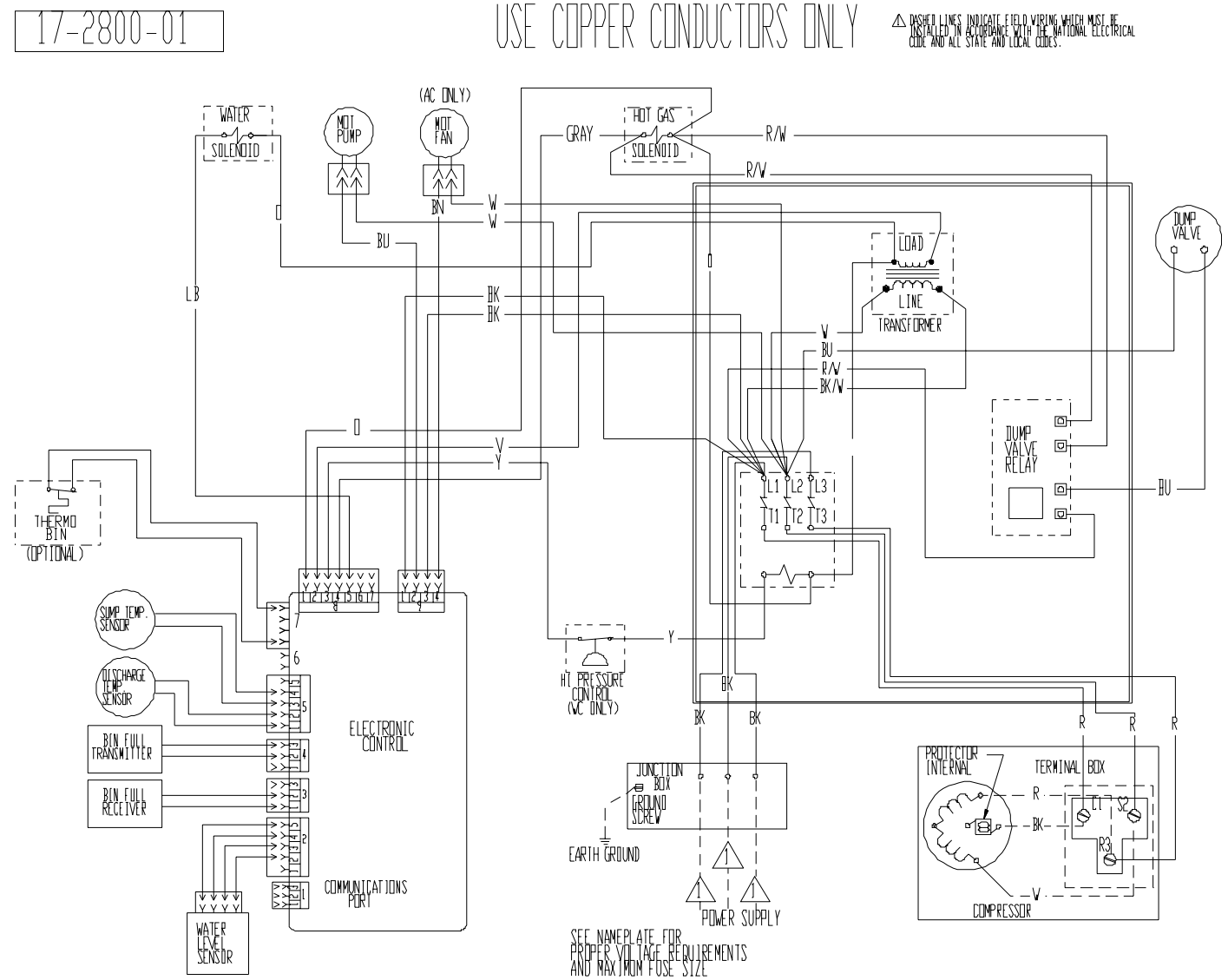

CAUTION:

THIS UNIT MUST BE GROUNDED.

MORE THAN ONE DISCONNECT MEANS MAY BE REQUIRED TO DISCONNECT ALL POWER TO THIS UNIT.

CME1056 Service Parts

Single Phase Wiring Diagram, A Series

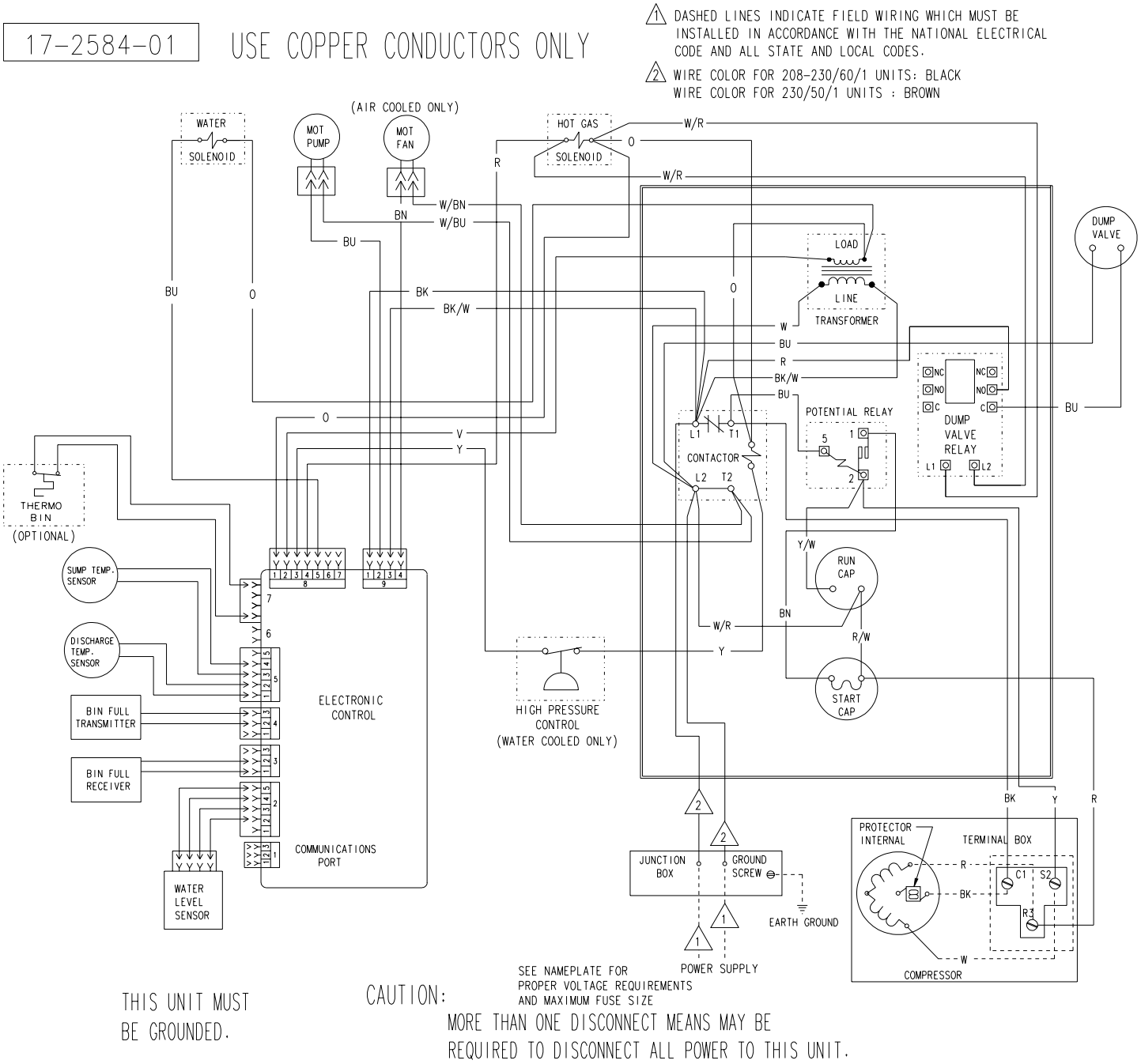

CME1056 Service Parts

Single Phase Schematic Diagram, A Series

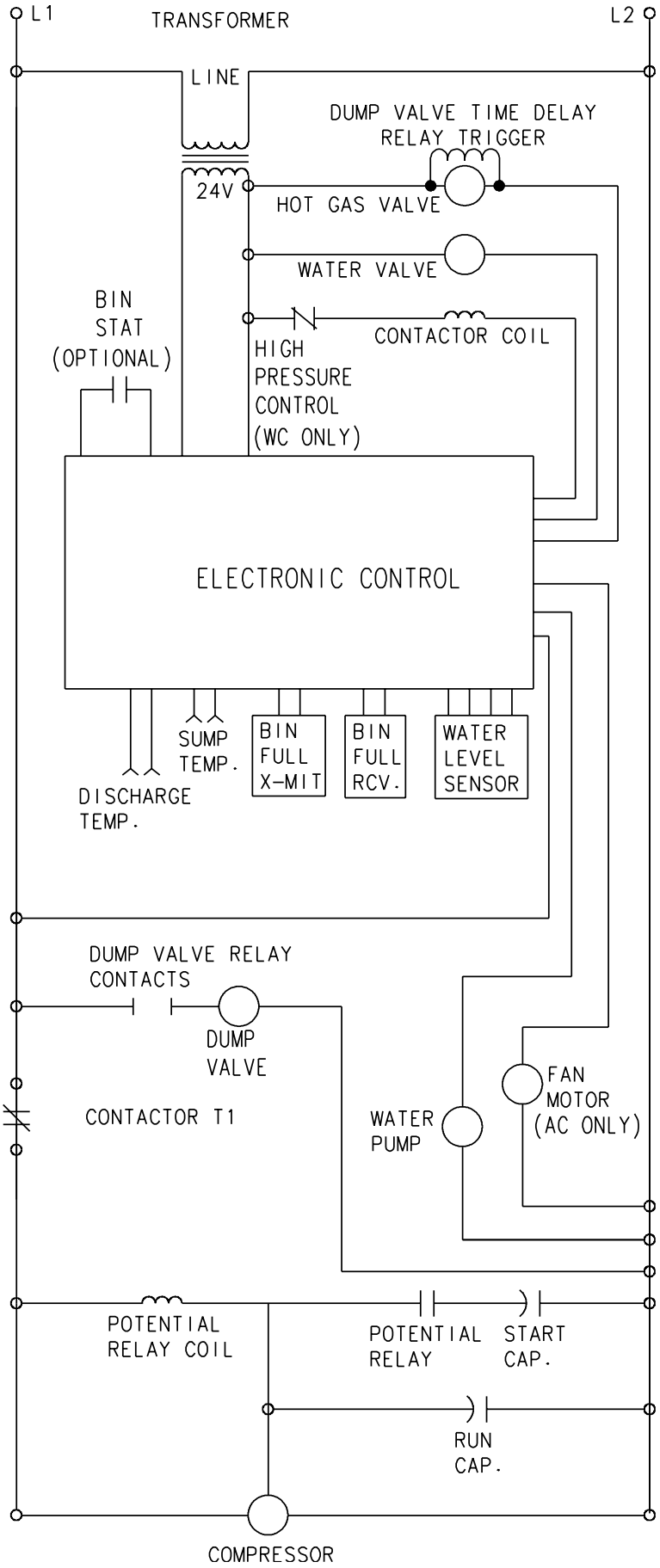

CME1056 Service Parts

Three Phase Wiring Diagram, A Series

17-2586-03

USE COPPER CONDUCTORS ONLY

1 DASHED LINES INDICATE FIELD WIRING WHICH MUST BE INSTALLED IN ACCORDANCE WITH THE NATIONAL ELECTRICAL CODE AND ALL STATE AND LOCAL CODES.

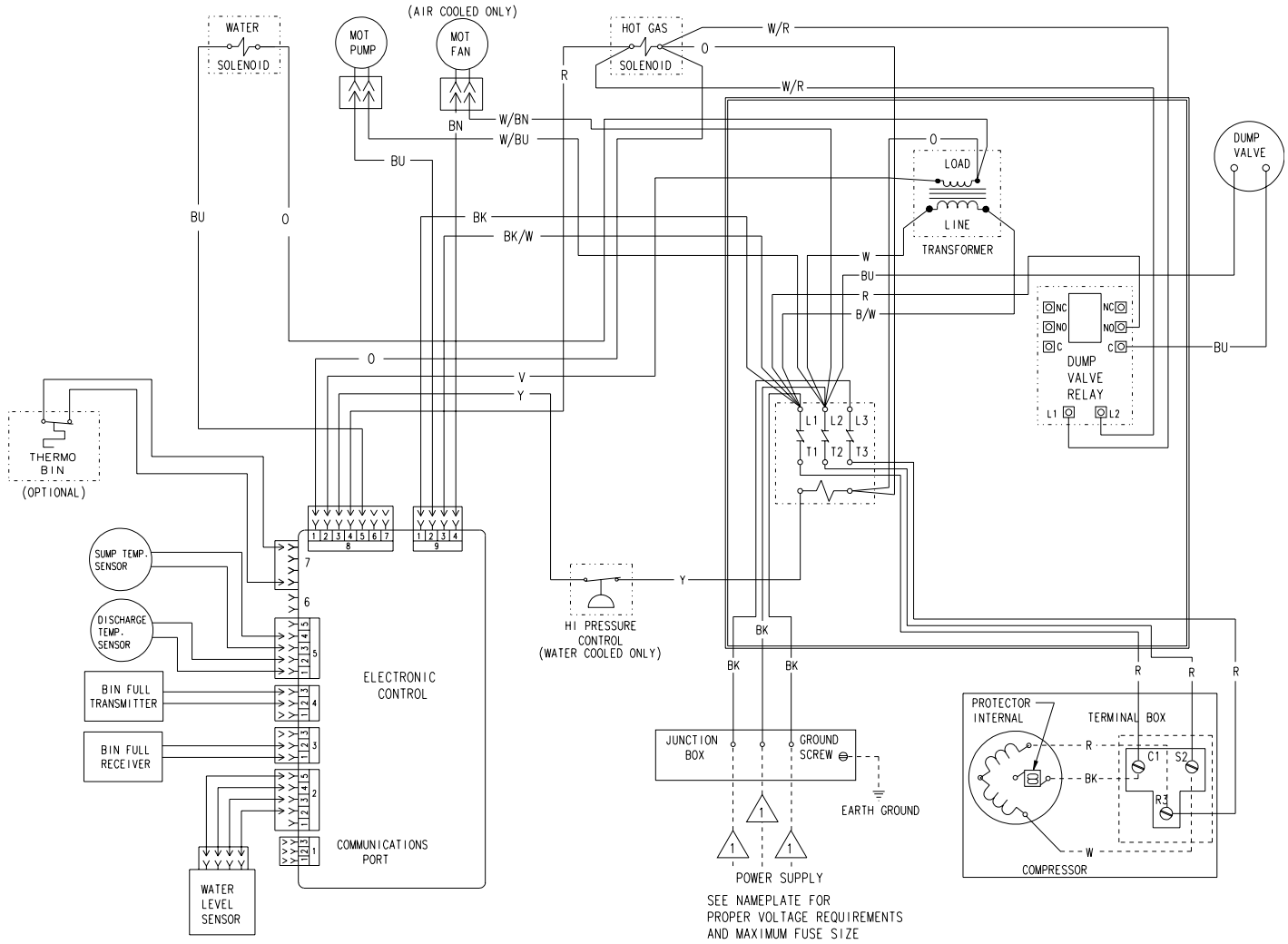

THIS UNIT MUST BE GROUNDED.

CAUTION:

MORE THAN ONE DISCONNECT MEANS MAY BE REQUIRED TO DISCONNECT ALL POWER TO THIS UNIT.

CME1056 Service Parts
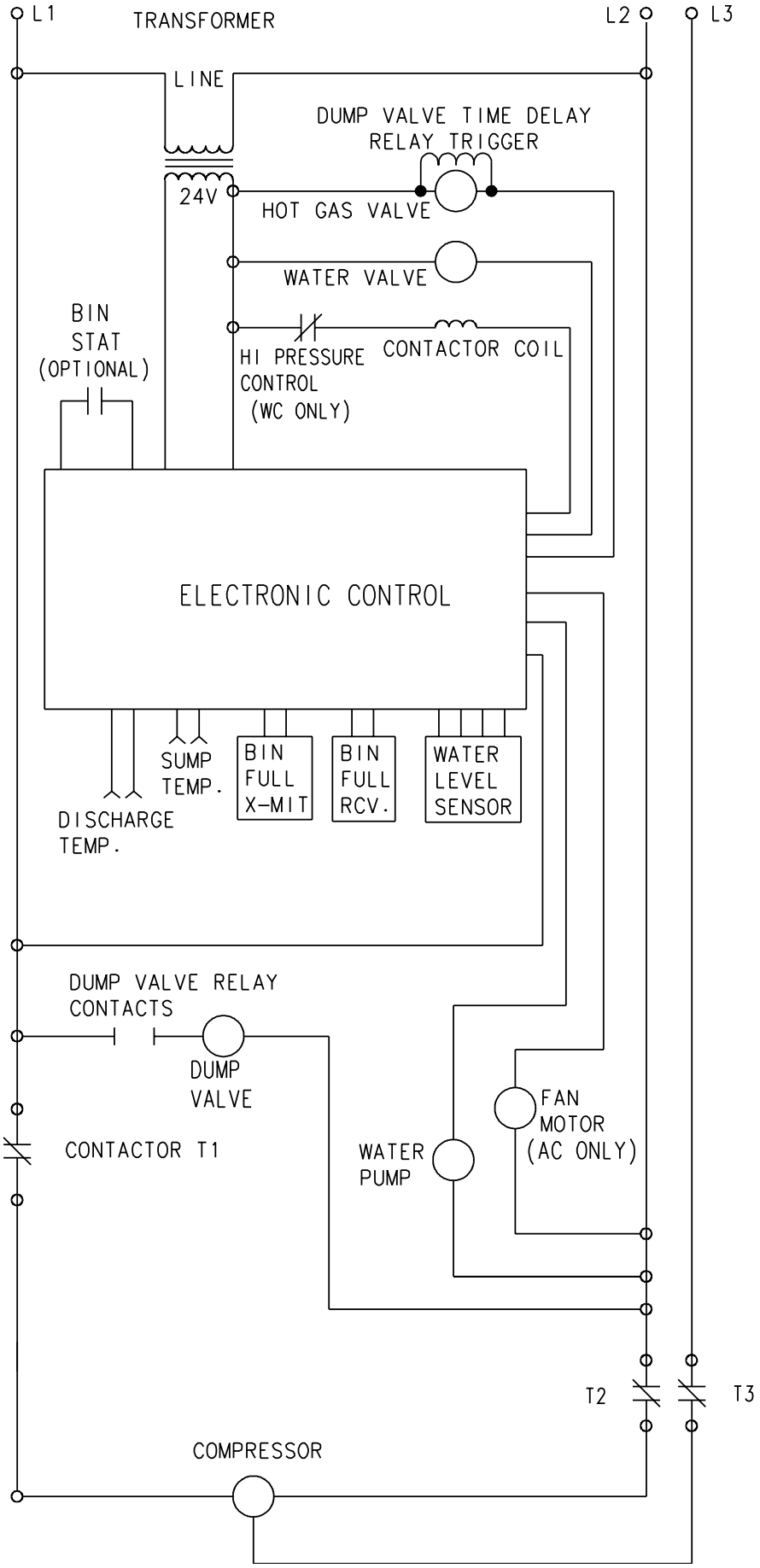
Three Phase Schematic Diagram