CME456R Service Parts

This parts list contains the parts numbers for the

- CME456 remote air cooled ice machine
- ERC111 remote condenser
- ERC211 remote condenser

The CME456 has been manufactured in A, B and C series. Be sure to check the description to confirm that the correct part number is being ordered.

Table of Contents

Cabinet . . . . . Page 2

Water Pump and Sensor . . . . . Page 3

Evaporator and Water Distribution . . . . . Page 4

Refrigeration . . . . . Page 5

Internal Back of Cabinet . . . . . Page 6

Interior Parts . . . . . Page 7

Control Box and Electrical . . . . . Page 8

Remote Condenser . . . . . Page 9

Wiring Diagram . . . . . Page 10

Schematic Diagram . . . . . Page 11

Schematic of Two Units Connected to One ERC211 Condenser . . . . . Page 12

CME456R Service Parts

Cabinet

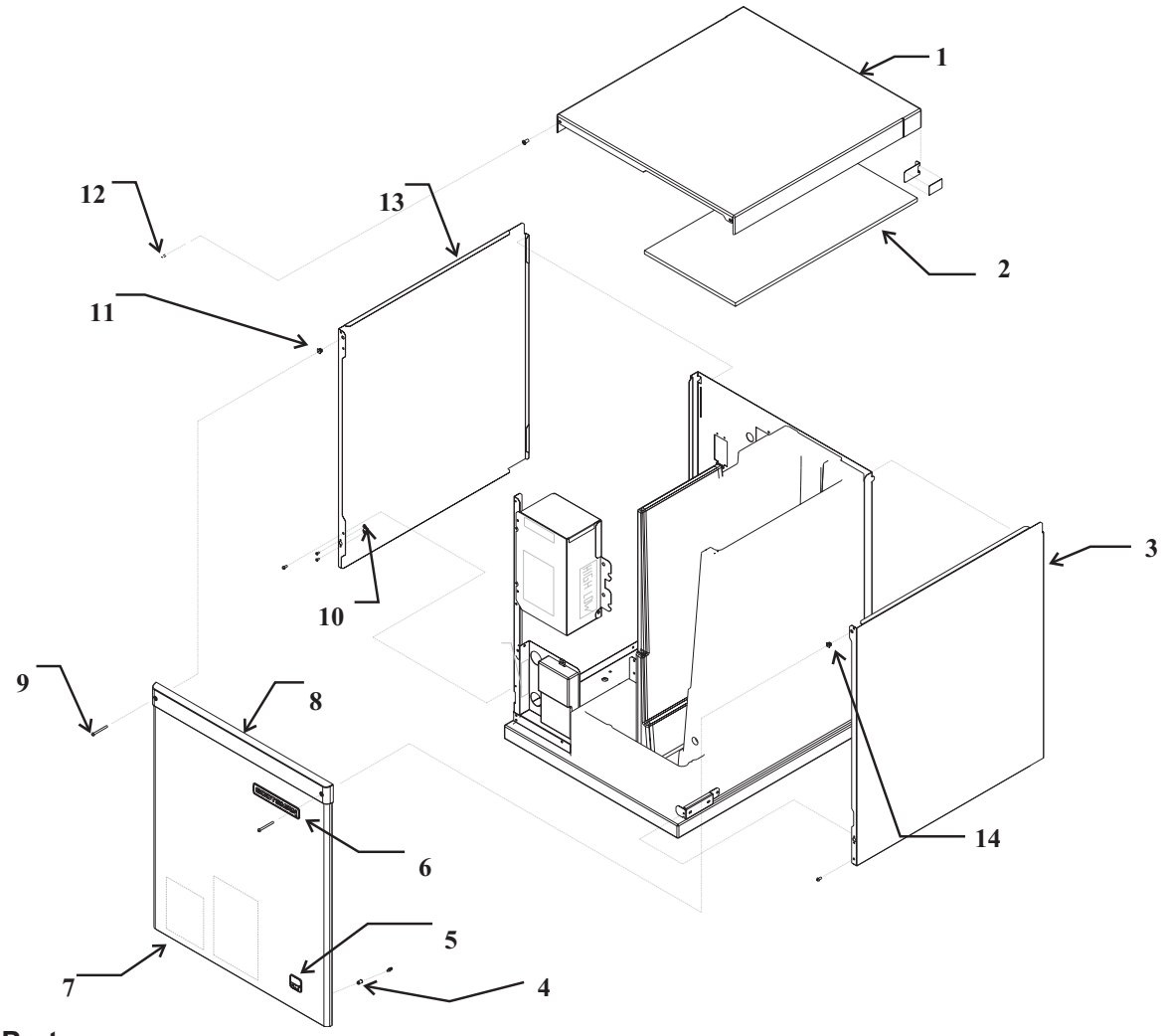

Item Number	Part Number	Description
1	02-3820-21	Top panel, plastic, includes item 2
2	02-3835-01	Insulation
3	A37513-021	Right side panel, includes catches
4	03-1733-01	Strike
	03-1734-01	Insert
5	15-0792-02	CM3 emblem
6	15-0808-01	Emblem
7	A37577-021	Front panel, includes trim strip, strikes and emblems
8	02-3819-31	Trim strip
9	03-1735-01	Screw
10	03-1733-02	Catch
11	03-3804-01	Catch
12	03-1409-19	Screw
13	A37531-021	Left side panel

CME456R Service Parts

Water Pump and Sensor

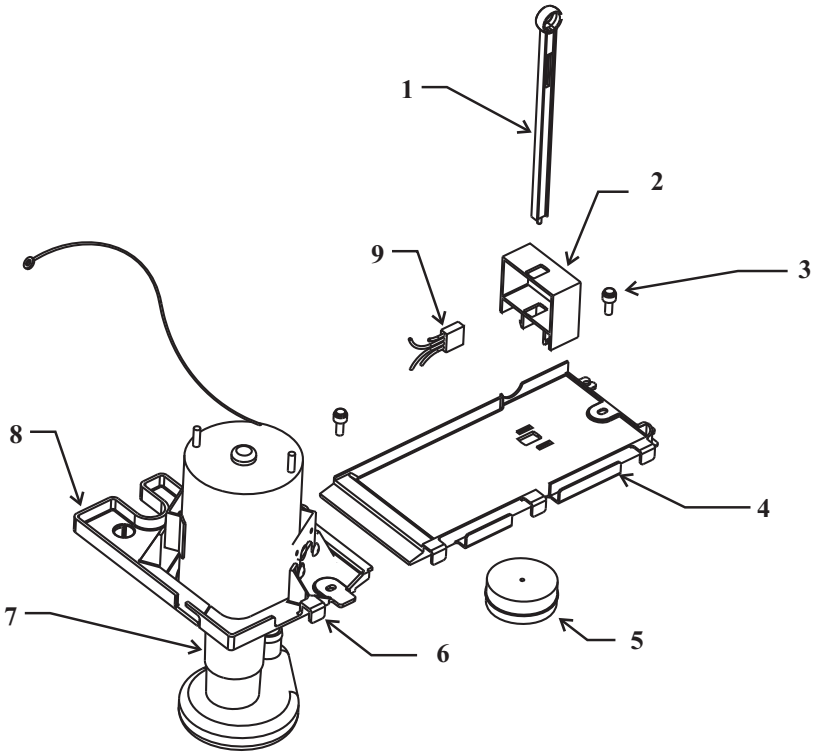

Item Number	Part Number	Description
1	02-3777-03	Float stem
2	11-0539-51	Water level sensor
3	03-1691-01	Screw
4	02-3803-01	Sump cover
5	02-3341-01	Float
6	02-3813-01	Pump bracket - front half
7	12-2586-27	Water pump, CME456 115/60
8	02-3802-01	Pump bracket, back half
9	12-2665-01	Harness

CME456R Service Parts

Evaporator and Water Distribution

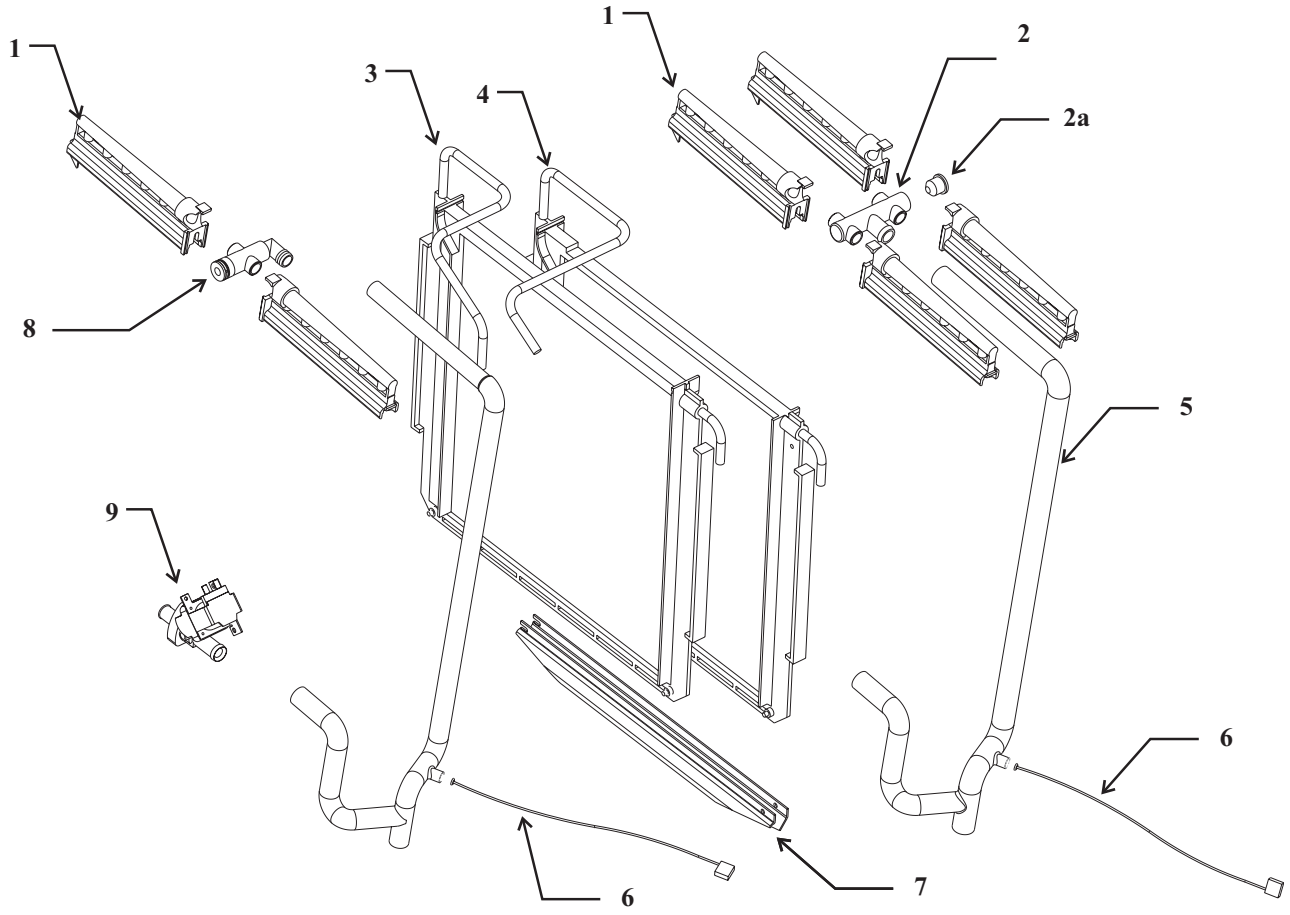

Item Number	Part Number	Description
1	02-2527-01	Water distributor
2	02-3811-01	Manifold
2a	13-0840-01	Rubber plug
3	A37575-022	Left evaporator
4	A37575-021	Right evaporator
5	02-3807-01	Water hose
6	11-0545-21	Temperature sensor, includes discharge sensor
7	02-3824-01	Water trough
8	A30926-020	Water manifold
9	11-0514-02	Purge valve,115/ 60 Hz

CME456R Service Parts

Refrigeration

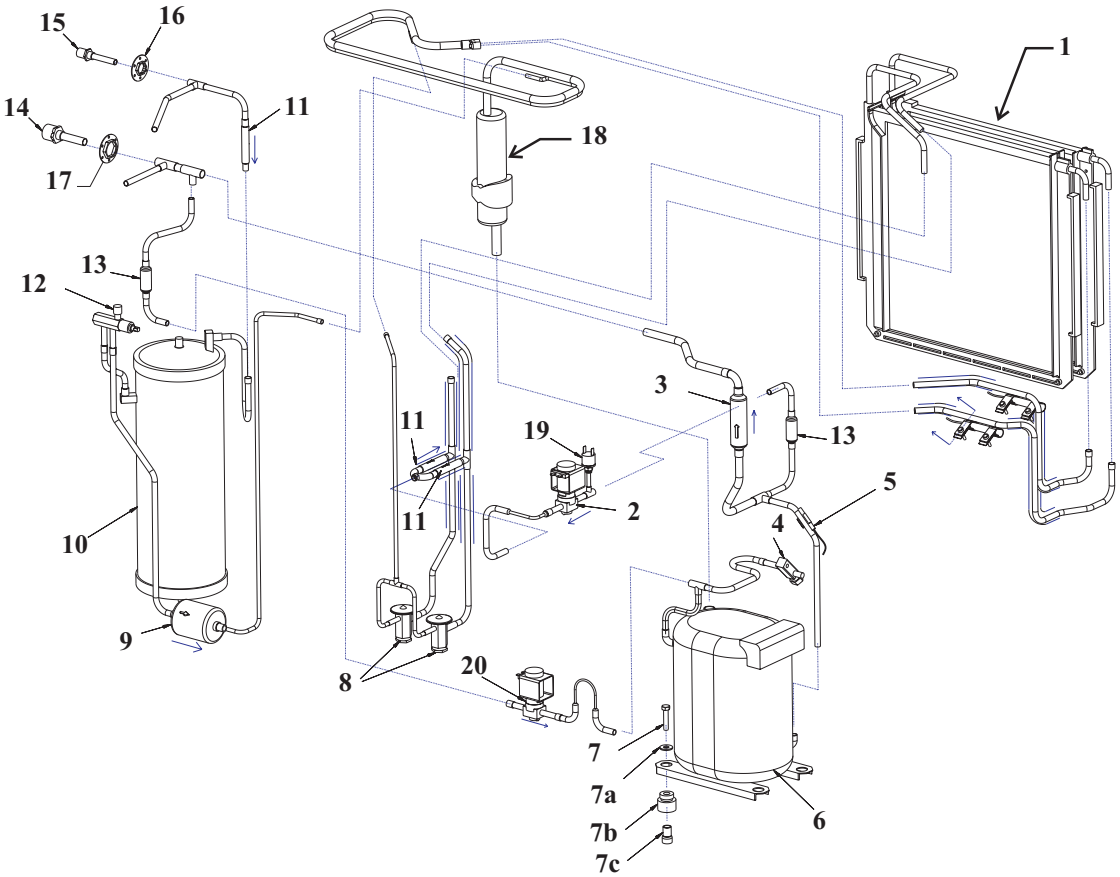

Item Number	Part Number	Description
1	see page 4	Evaporator
2	12-2471-22	Hot gas valve
3	16-1028-01	Discharge check valve
4	16-0832-21	Access valve
	16-0832-03	Port cap
	16-0832-02	Stem cap
5	11-0545-21	Discharge sensor, includes water sensor
6	18-8839-21	Compressor, 115/60, includes PTCR and drier
6a	12-1868-01	External crankcase heater
6b	18-8711-50	Compressor overload
7	03-1405-20	Screw
7a	03-1407-07	Washer
7b	18-2200-28	Grommet
7c	18-2200-27	Sleeve
8	16-1009-22	TXV, AN ½ SZ for A & B series
	16-1115-21	TXV for C series, includes insulation
	02-3792-02	Insulation for 16-1009-22
	02-4045-01	Insulation for 16-1115-21

Item Number	Part Number	Description
9	02-3319-01	Filter drier
10	16-1037-01	Receiver
11	16-1071-01	Check valve
12	16-1030-01	Liquid line access valve
13	16-1063-01	Strainer
14	16-0850-01	Liquid fitting
15	16-0850-03	Discharge fitting
16	16-0701-07	Mounting flange
17	16-0701-14	Mounting flange
18	A37541-001	Heat exchanger w/accumulator
19	11-0501-22	Hi press. Cut out
20	11-0513-21	Bypass valve

CME456R Service Parts

Internal Back of Cabinet

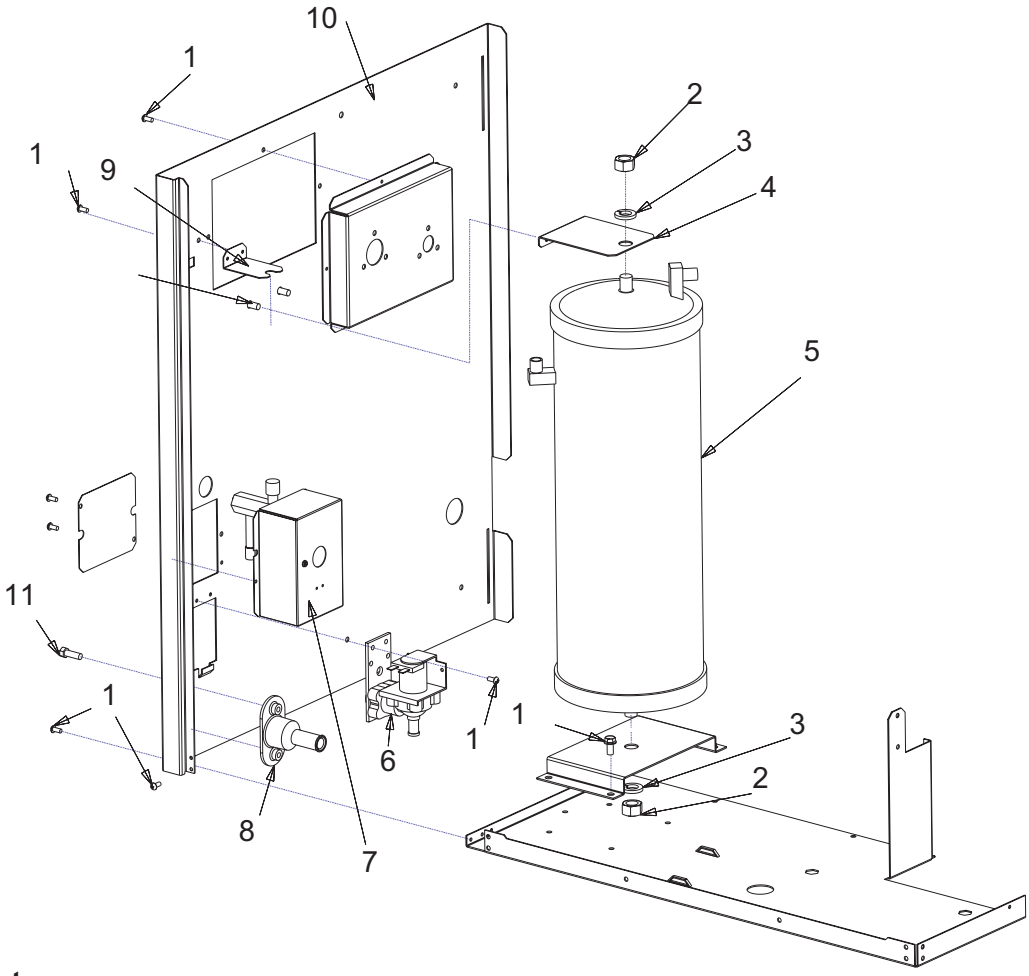

Item Number	Part Number	Description
1	03-1531-01	Screw
2	03-1406-13	Nut
3	03-1410-06	Lockwasher
4	A37211-001	Bracket
5	Receiver - see page 5	
6	12-2548-01	Inlet water valve
7	Junction box	
8	02-3692-21	Drain fitting
9	A37599-001	Bracket
10	A37526-001	Back panel
11	03-0571-01	Screw

CME456R Service Parts

Interior Parts

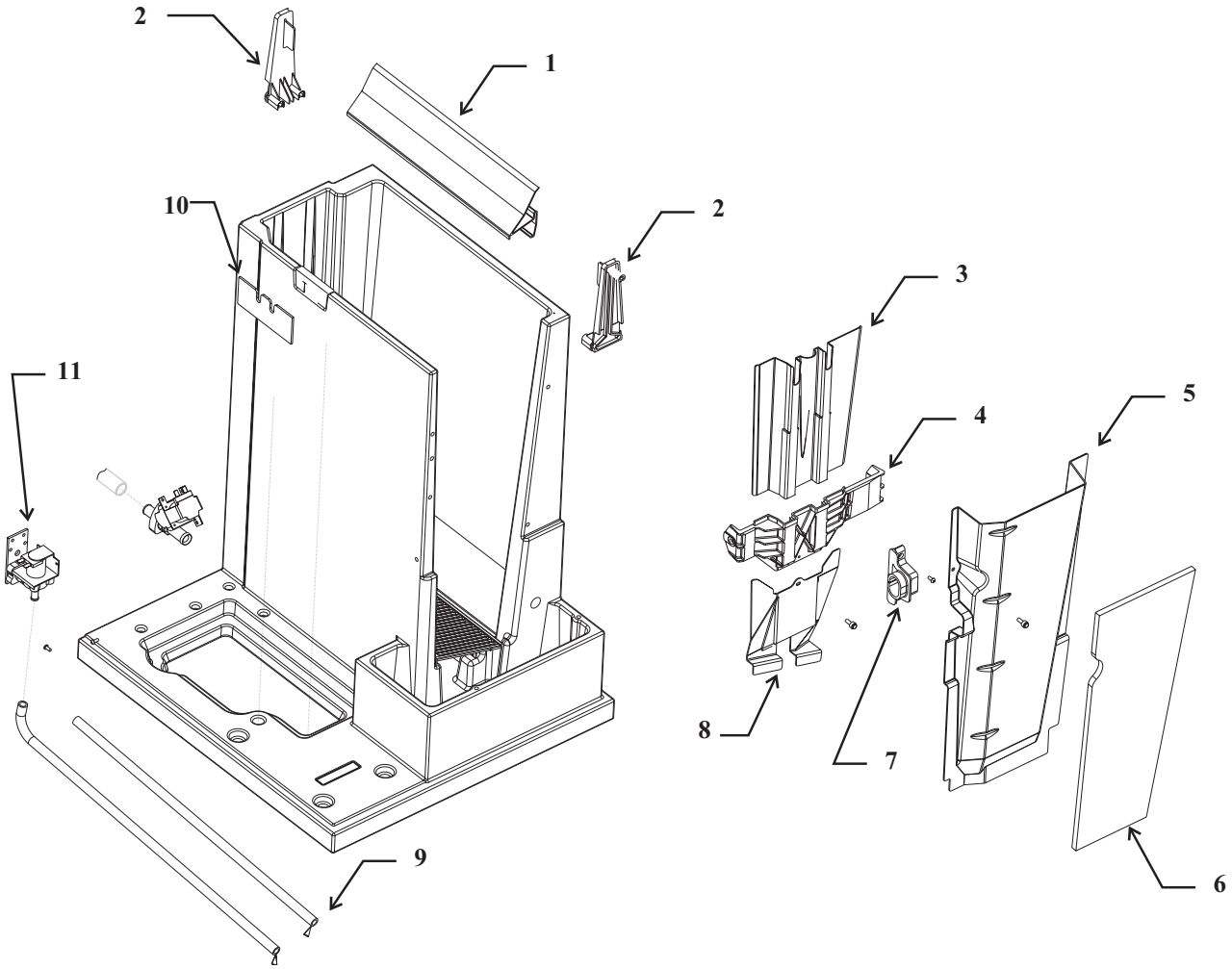

Item Number	Part Number	Description
1	02-3765-02	Cascading shield
2	11-0540-21	Ice Sensors, set of two
3	02-3808-01	Upper splash panel
4	02-3805-01	Evaporator support
5	02-3815-01	Evaporator cover
6	02-3834-01	Insulation
7	02-3816-01	Grommet
8	02-3806-01	Lower splash panel
9	13-0674-02	Tubing, order 2 units (ft)
10	02-3833-02	Grommet seal
	02-3833-01	Grommet
11	12-2548-01	Water valve

CME456R Service Parts

Control Box and Electrical

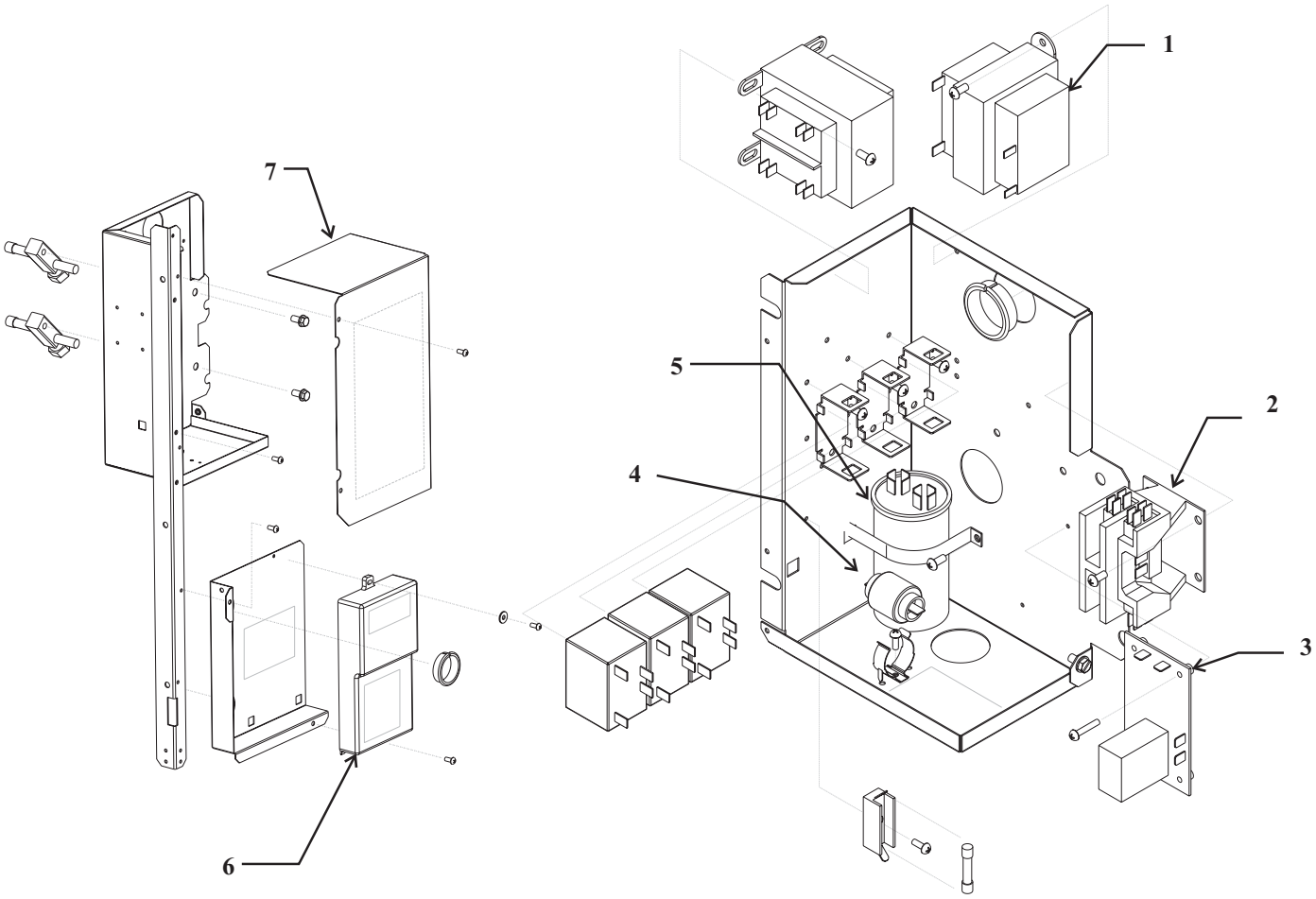

Item Number	Part Number	Description
1	A37231-001	Transformer 115/60/1
2	12-2469-01	Contactor
3	11-0531-21	Purge valve timer
4	18-8835-01	PTCR
5	18-1902-45	Run capacitor
6	12-2838-23	Controller for CME456
7	A37510-001	Control box cover

Harnesses:

Hi Voltage:
12-2771-01

Low Voltage
12-2769-02

CME456R Service Parts

Remote Condenser

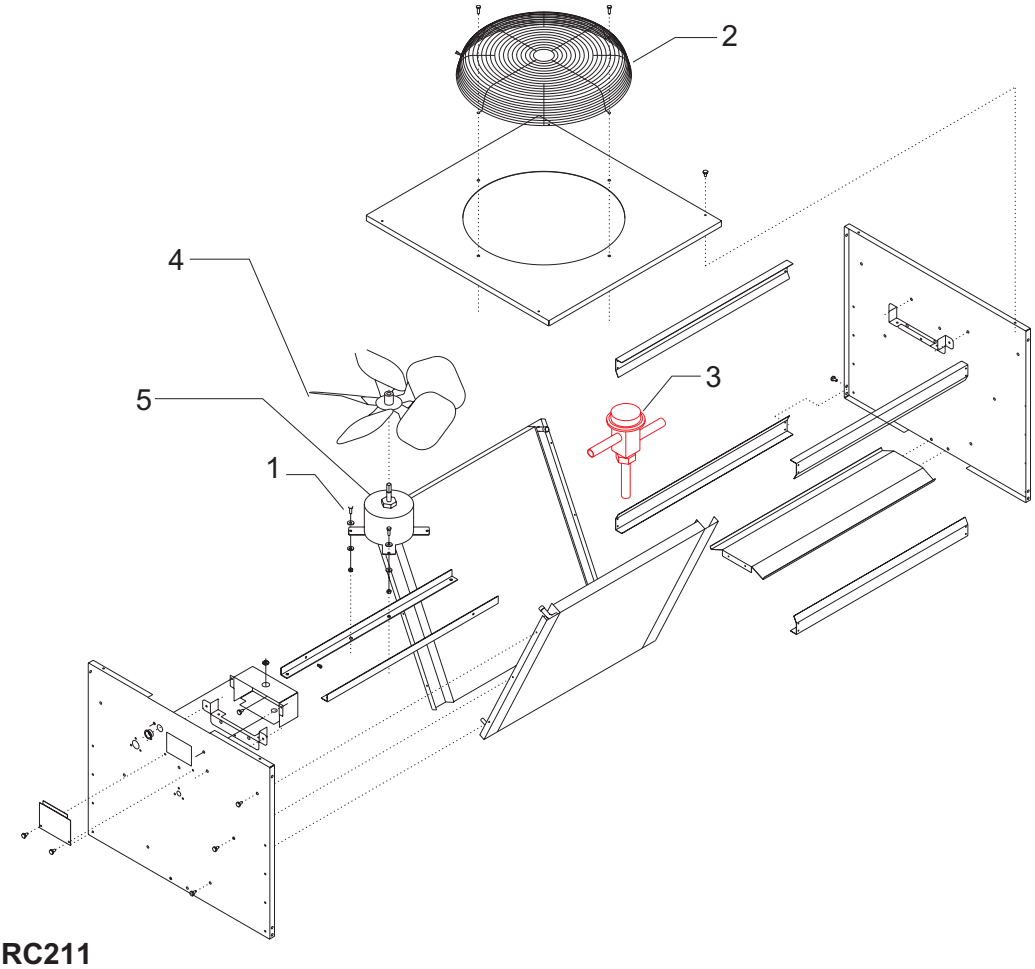

ERC111 or ERC211

Item Number	Part Number	Description
1	03-1405-08	Screw
2	02-3575-01	Fan guard
3	16-1044-01	Headmaster
4	18-8816-01	Fan blade
5	12-2651-02	Fan motor (115/60/1)
Not Shown:		
	A37169-001	Leg
	A37170-001	Leg brace
	03-1645-01	Screw for legs
	16-0850-01	Quick connect, discharge
	16-0850-03	Quick connect, liquid

CME456R Service Parts

Wiring Diagram

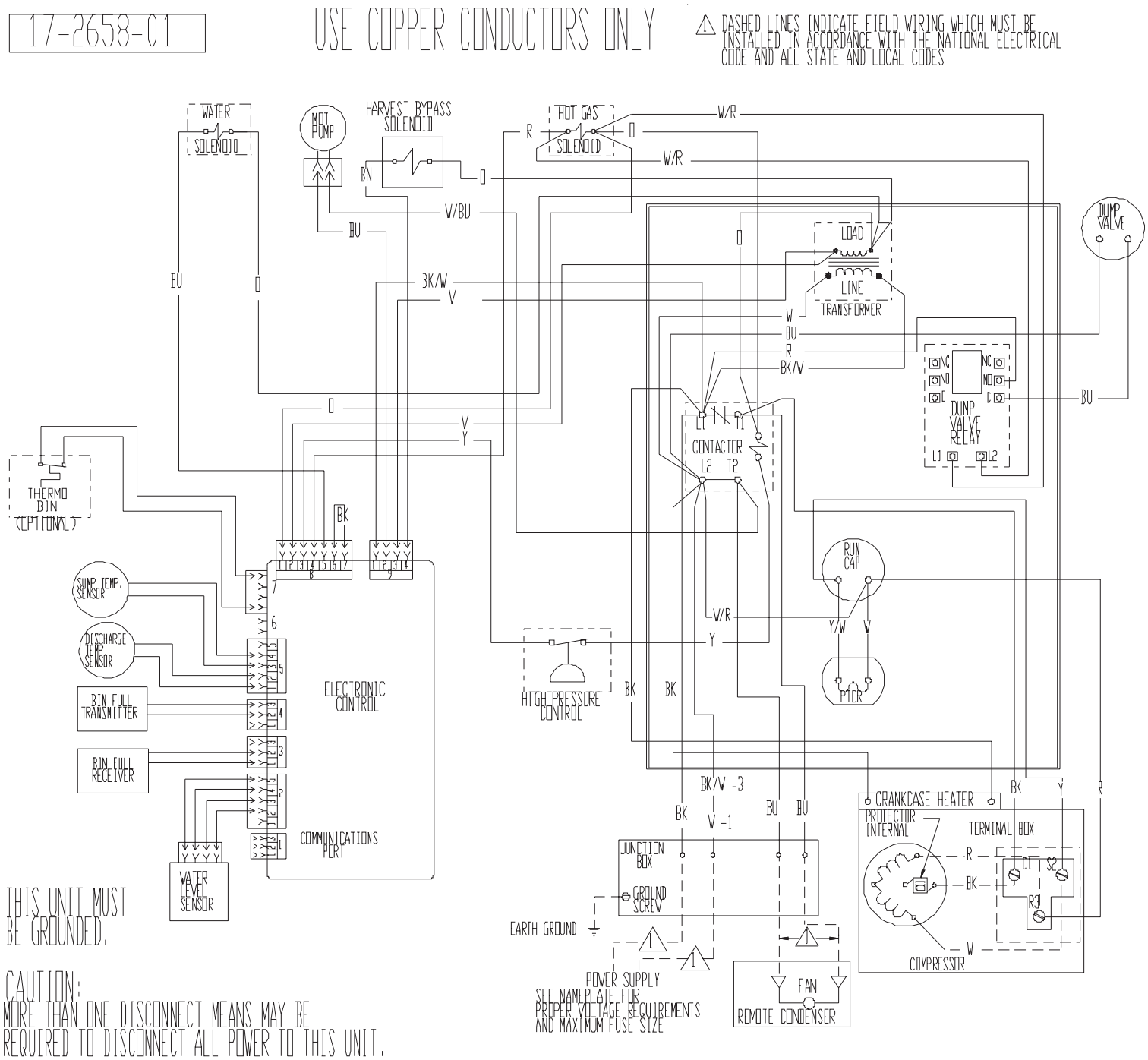

CME456R Service Parts

Schematic Diagram

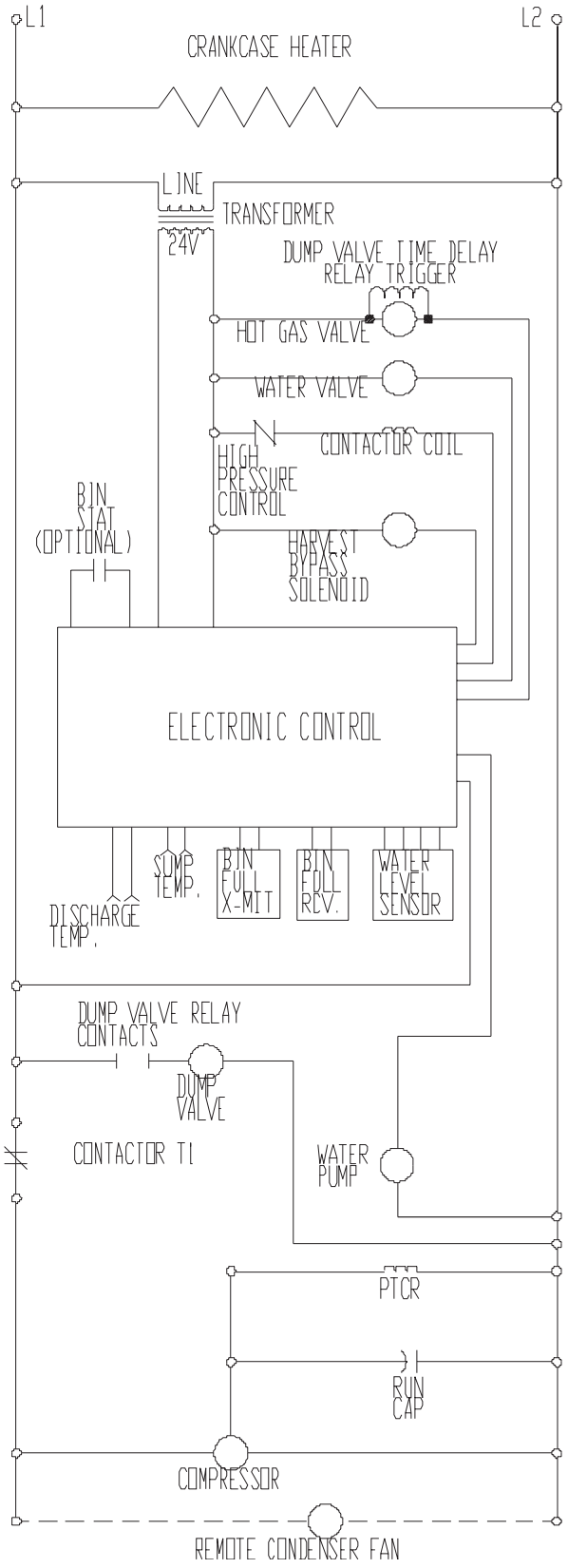

Schematic of Two Units Connected to One ERC211 Condenser

KCMR115 Schematic Diagram

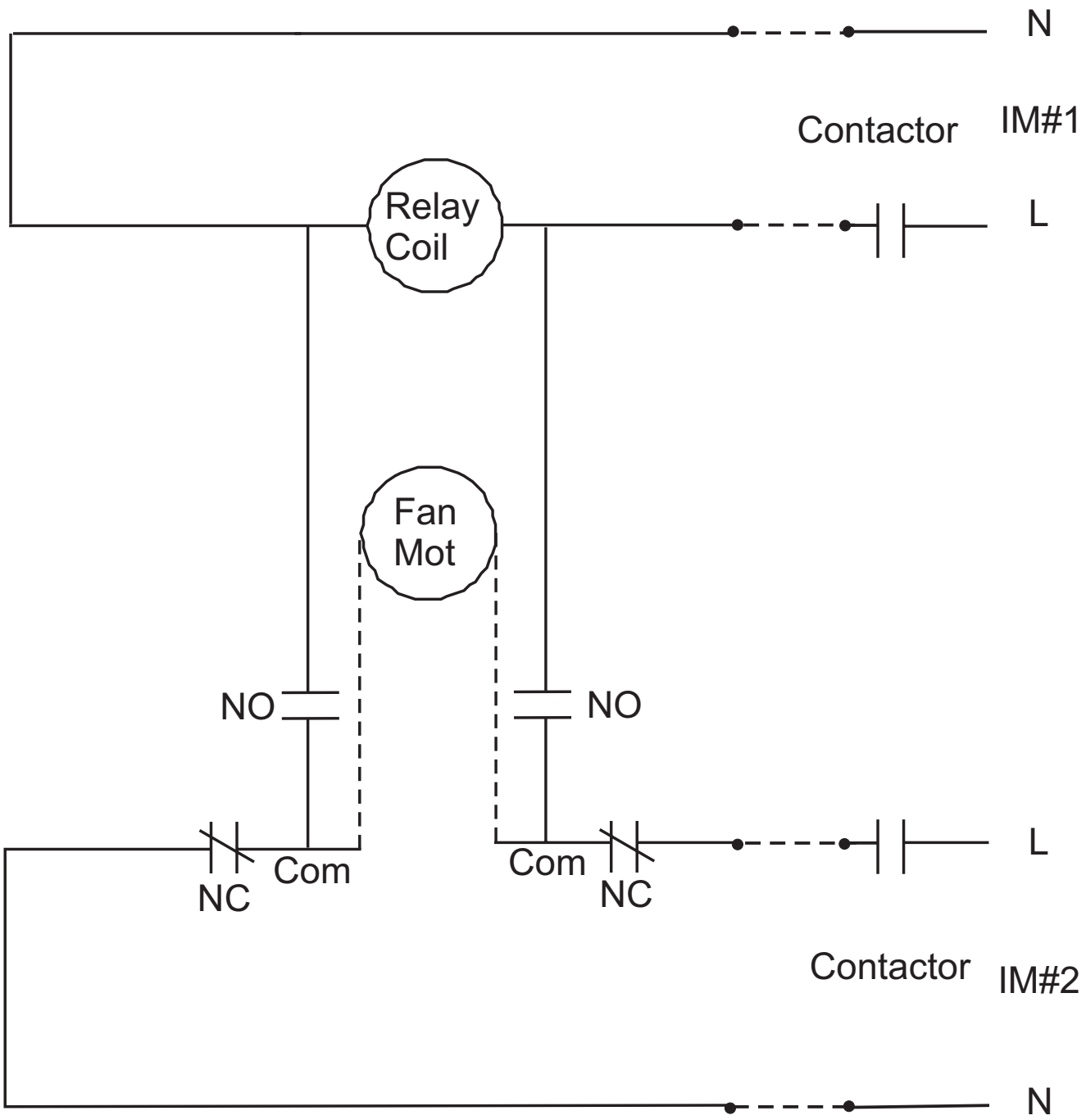

Dashed Lines Represent Field Wiring.
Schematic Shown with Both Ice Machines and the Fan Motor OFF.