For 9210316

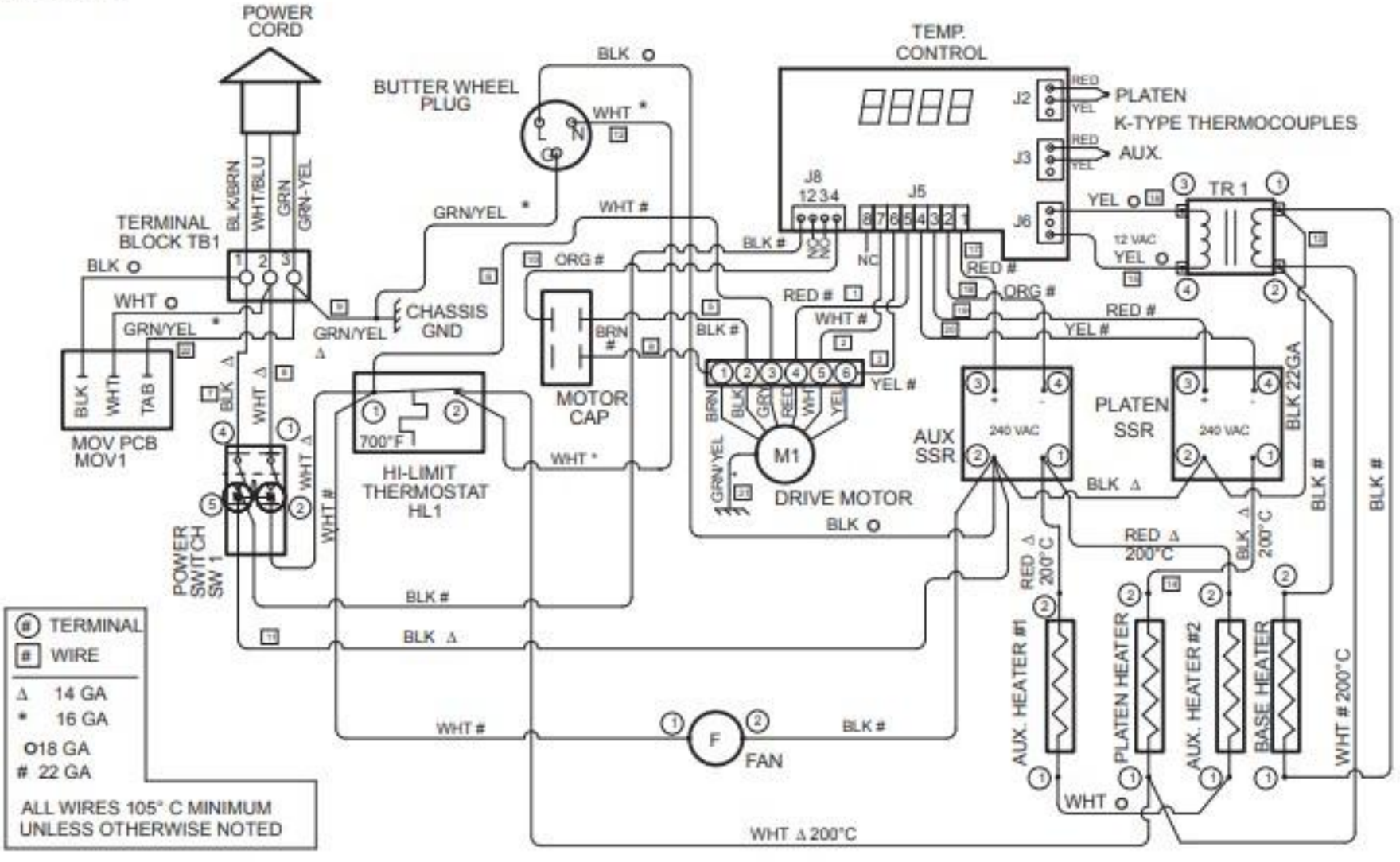
POWER CORD
BLK/BRN
WHT/BLU
GRN
GRN-YEL
TERMINAL BLOCK TB1
BLK
WHT
GRN/YEL
MOV PCB MOV1
BLK
WHT
TAB
POWER SWITCH SW 1
BUTTER WHEEL PLUG
L
N
G
CHASSIS GND
700°F
HI-LIMIT THERMOSTAT HL1
MOTOR CAP
BRN
TEMP. CONTROL
J2
J3
J6
J8
1234
J5
RED
YEL
PLATEN
K-TYPE THERMOCOUPLES
AUX.
NC
NO
TR 1
12 VAC
BRN
BLK
GRN
RED
WHT
YEL
M1
DRIVE MOTOR
AUX SSR
PLATEN SSR
240 VAC
BLK 22GA
AUX. HEATER #1
PLATEN HEATER
AUX. HEATER #2
BASE HEATER
WHT # 200°C
RED Δ 200°C
BLK Δ 200°C
F
FAN
WHT Δ 200°C
TERMINAL
WIRE
Δ 14 GA
* 16 GA
O18 GA
22 GA
ALL WIRES 105° C MINIMUM UNLESS OTHERWISE NOTED

For 9210317

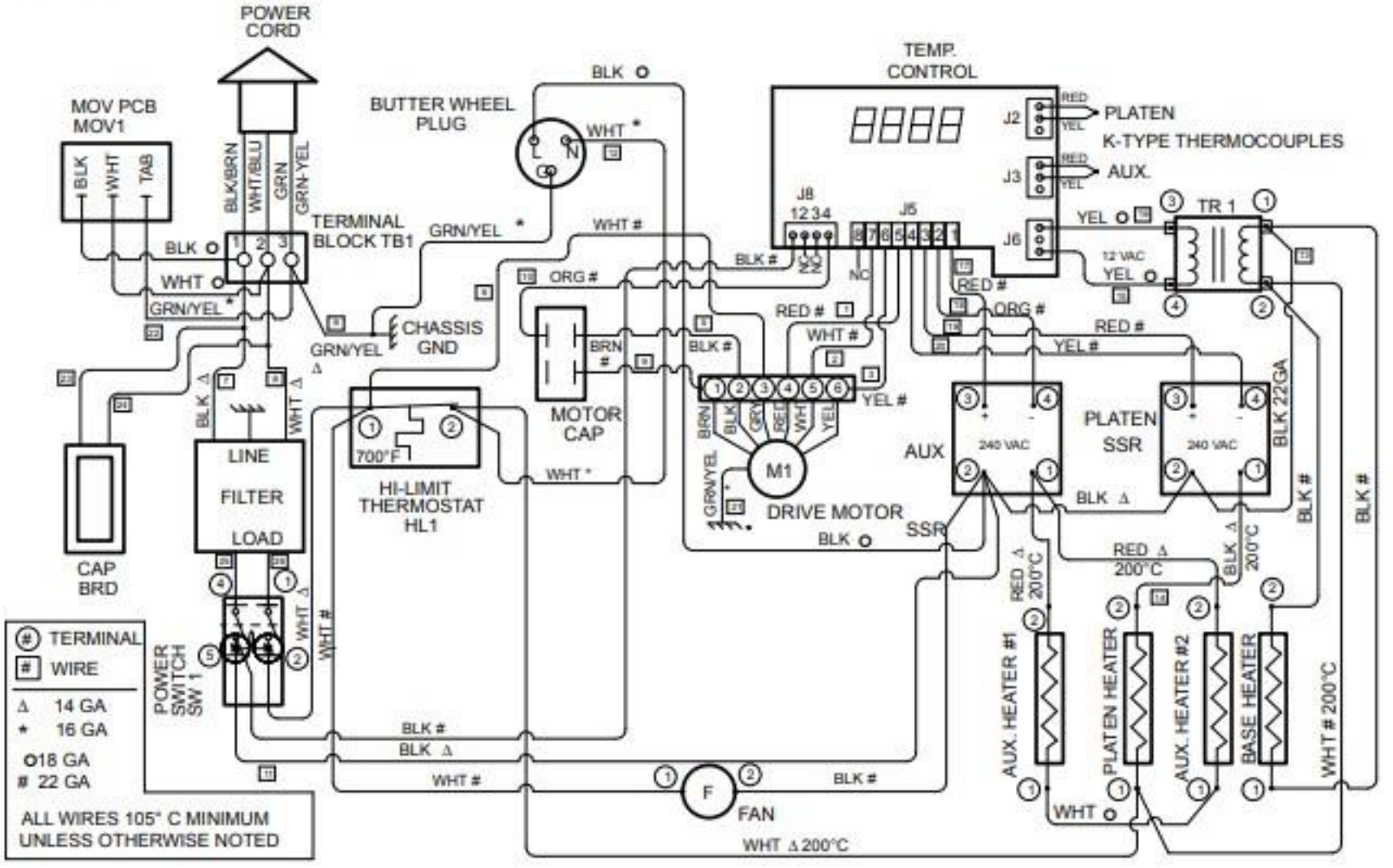
POWER CORD
MOV PCB MOV1
BLK
WHT
TAB
BLK/BRN
WHT/BLU
GRN
GRN-YEL
TERMINAL BLOCK TB1
BUTTER WHEEL PLUG
L
N
G
TEMP. CONTROL
J2
J3
J6
J8
J5
PLATEN
K-TYPE THERMOCOUPLES
AUX.
TR 1
12 VAC
CHASSIS GND
MOTOR CAP
HI-LIMIT THERMOSTAT HL1
700°F
LINE FILTER LOAD
CAP BRD
POWER SWITCH SW 1
M1
DRIVE MOTOR
AUX
PLATEN SSR
240 VAC
BLK 22GA
SSR
AUX. HEATER #1
PLATEN HEATER
AUX. HEATER #2
BASE HEATER
WHT # 200°C
RED Δ 200°C
BLK Δ 200°C
F
FAN
WHT Δ 200°C
TERMINAL
WIRE
Δ 14 GA
★ 16 GA
O18 GA
22 GA
ALL WIRES 105° C MINIMUM UNLESS OTHERWISE NOTED

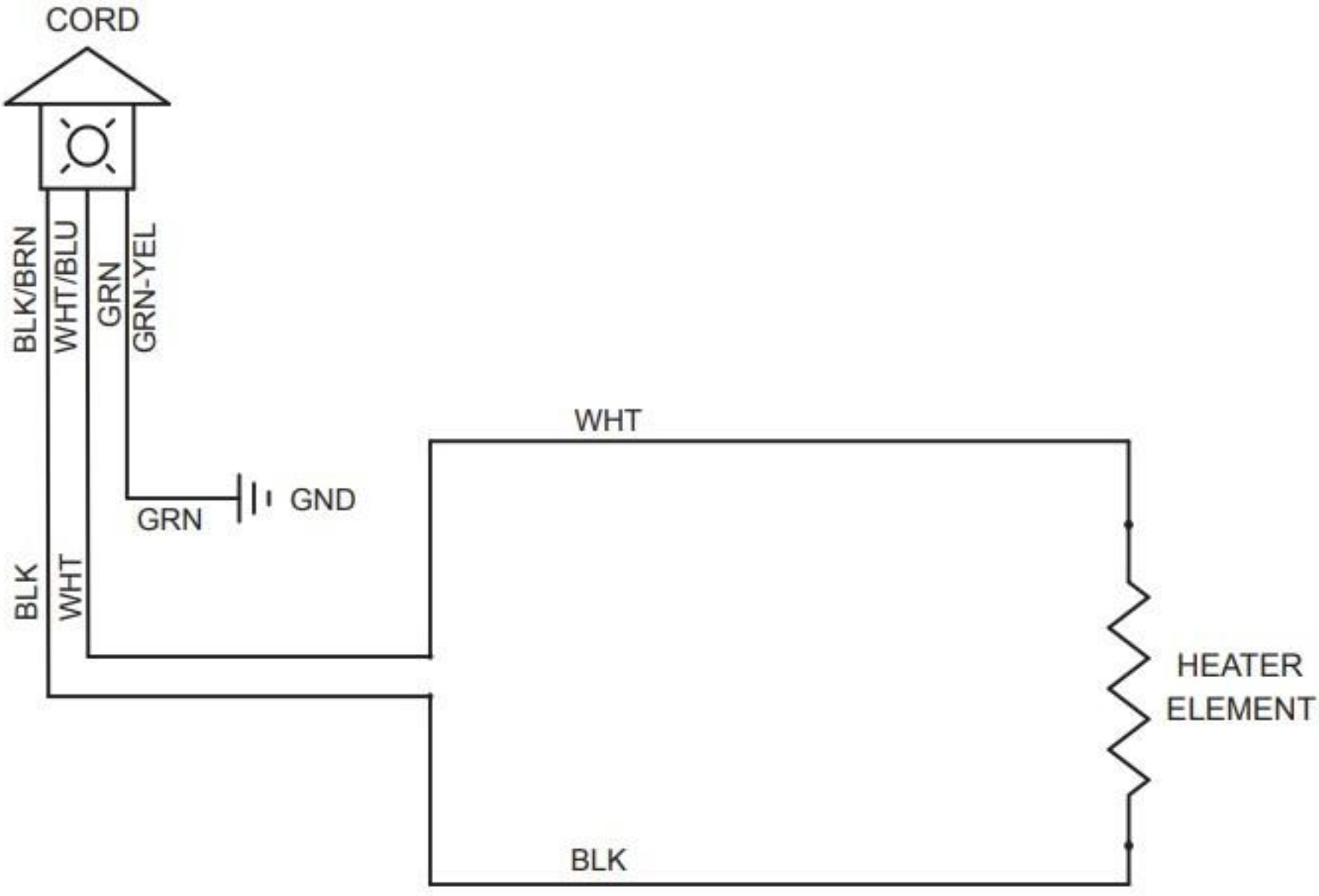
CORD
BLK/BRN
WHT/BLU
GRN
GRN-YEL
GRN
GND
BLK
WHT
WHT
HEATER
ELEMENT
BLK