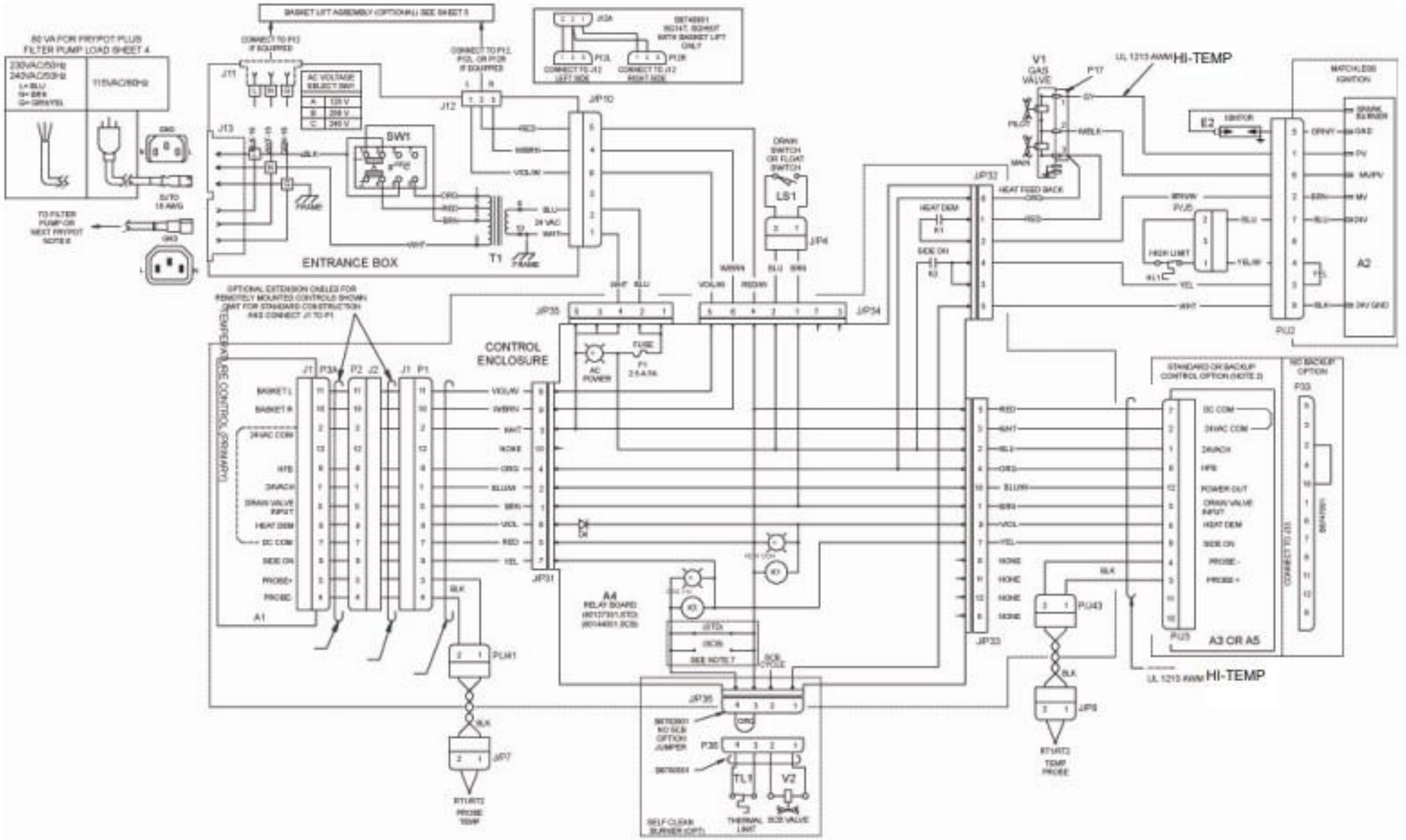
BASKET LIFT ASSEMBLY (OPTIONAL) SEE SHEET 5
80 VA FOR FRYPOT PLUS FILTER PUMP LOAD SHEET 4
230VAC/50Hz
240VAC/50Hz
115VAC/60Hz
CONNECT TO P12 P12L OR P12R IF EQUIPPED
AC VOLTAGE SELECT SWITCH
A 120 V
B 208 V
C 240 V
SW1
J11
J12
J13
J10
T1
24 VAC
ENTRANCE BOX
FRAME
TO FILTER PUMP OR NEXT FRYPOT NOTE 8
GND
DRAIN SWITCH OR FLOAT SWITCH
LS1
J14
V1 GAS VALVE
P17
UL 1213 AWM HI-TEMP
MATCHLESS IGNITION
E2 IGNITOR
A2
PLU2
HEAT FEED BACK
HEAT DEM
SIDE ON
HIGH LIMIT
PLU5
OPTIONAL EXTENSION CABLES FOR REMOTELY MOUNTED CONTROLS SHOWN. UNIT FOR STANDARD CONSTRUCTION HAS CONNECT J1 TO P1
CONTROL ENCLOSURE
AC POWER
FUSE
F1 2.5 A 5A
J35
J34
J31
J33
A1
BASKET L
BASKET R
24VAC COM
HTS
24VACH
DRAIN VALVE INPUT
HEAT DEM
DC COM
SIDE ON
PROBE+
PROBE-
A4 RELAY BOARD
STANDARD OR BACKUP CONTROL OPTION (NOTE 2)
A3 OR A5
BACKUP OPTION
P33
DC COM
24VAC COM
24VACH
HTS
POWER OUT
DRAIN VALVE INPUT
HEAT DEM
SIDE ON
PROBE-
PROBE+
PLU41
PLU43
J37
J38
RTU(RTD) PROBE TEMP
RTU(RTD) TEMP PROBE
UL 1213 AWM HI-TEMP
J35
P35
TL1
V2
THERMAL LIMIT
SCB VALVE
SELF CLEAN BURNER (OPT)

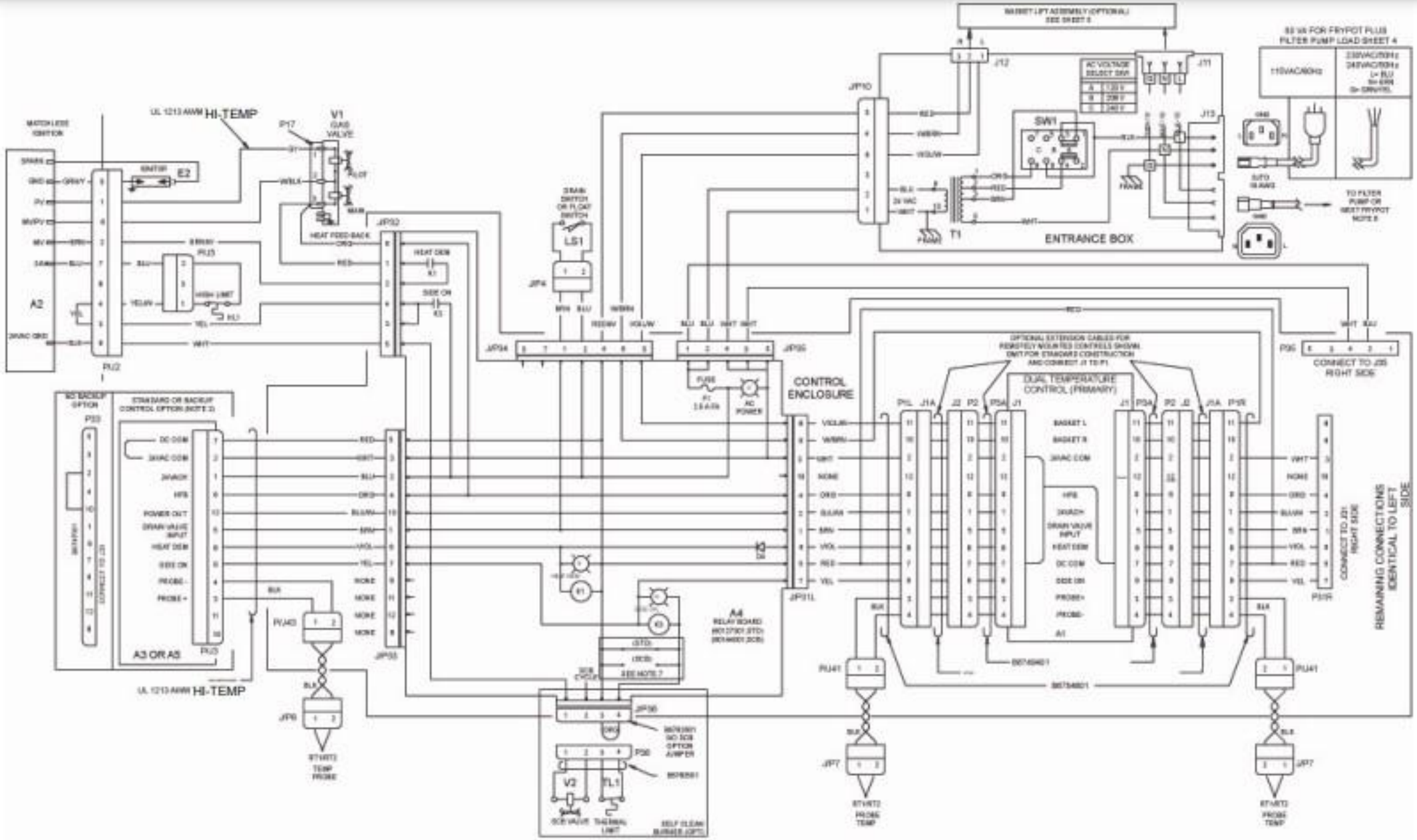
HI-TEMP
UL 1213 AWM
V1
GAS VALVE
E2
A2
LS1
T1
SW1
ENTRANCE BOX
CONTROL ENCLOSURE
DUAL TEMPERATURE CONTROL (PRIMARY)
A3 OR A5
A4
RELAY BOARD
REMAINING CONNECTIONS IDENTICAL TO LEFT SIDE
CONNECT TO J20 RIGHT SIDE
TO FILTER PUMP OR NEXT FRYPOT
HI-TEMP
UL 1213 AWM

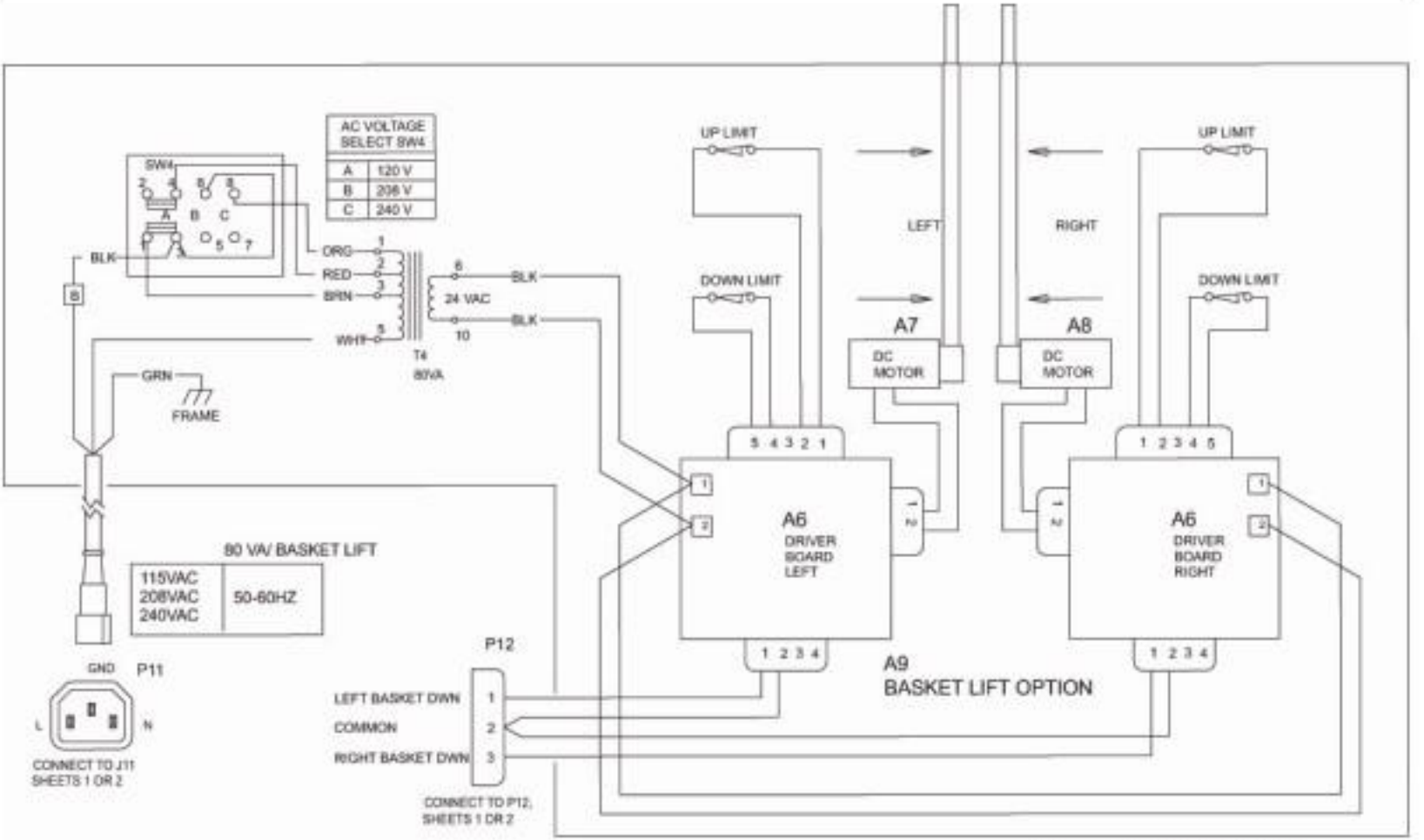
AC VOLTAGE SELECT SW4
A 120 V
B 208 V
C 240 V
SW4
BLK
ORG
RED
BRN
WHT
24 VAC
T4
80VA
GRN
FRAME
UP LIMIT
DOWN LIMIT
LEFT
RIGHT
A7
A8
DC MOTOR
A6
DRIVER BOARD LEFT
DRIVER BOARD RIGHT
A9
BASKET LIFT OPTION
80 VA/ BASKET LIFT
115VAC
208VAC
240VAC
50-60HZ
GND
P11
L
N
CONNECT TO J11 SHEETS 1 OR 2
P12
LEFT BASKET DWN
COMMON
RIGHT BASKET DWN
CONNECT TO P12, SHEETS 1 OR 2

115V/60HZ

U.S. AND CANADA

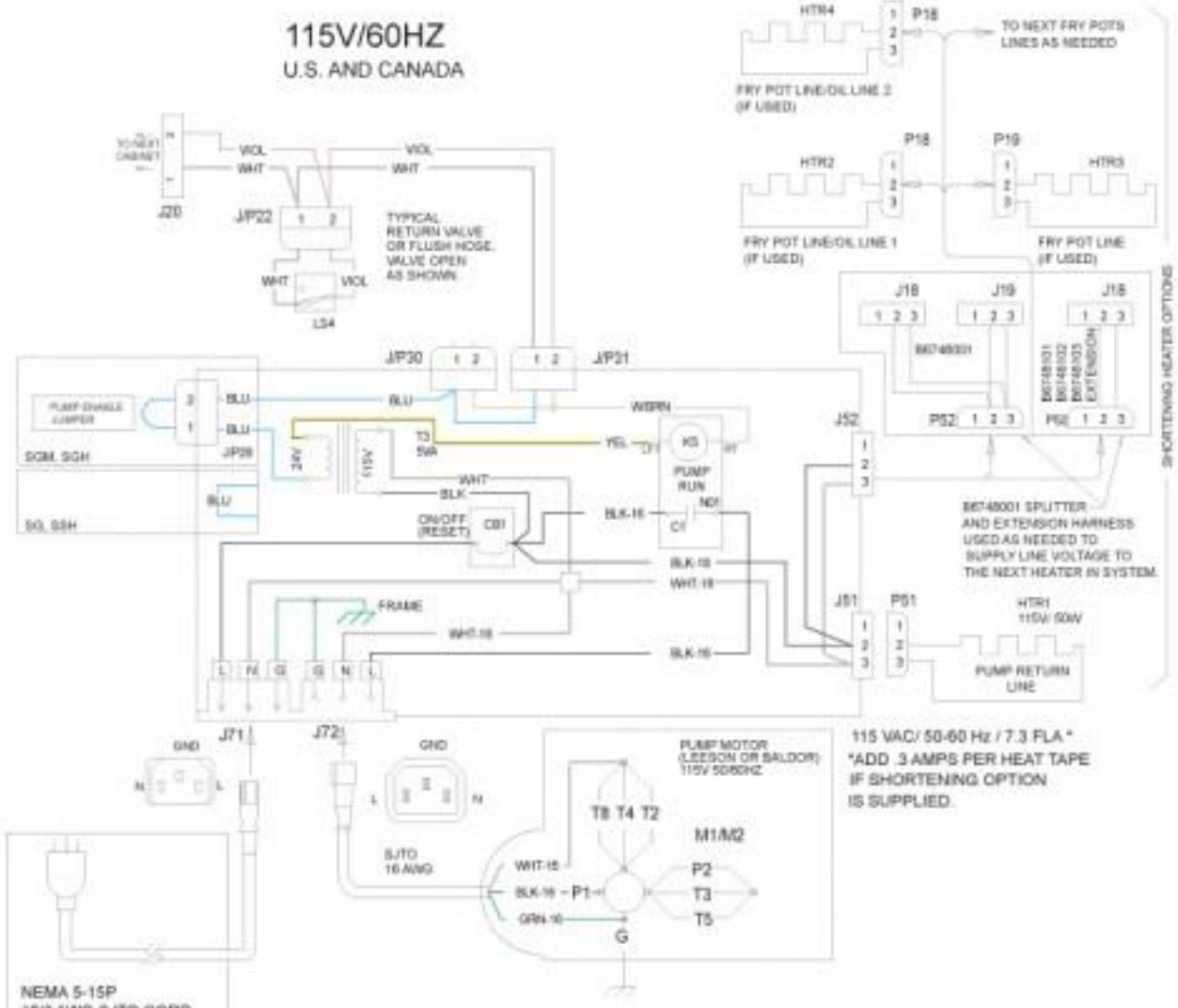

FILTER PUMP REPLACEMENT PARTS

ITEM	VOLTAGE	DESCRIPTION	PART NO.
CB1	120V-50/60Hz	CKT BRKR, 10 AMP SINGLE POLE	60077001
	208-240V 50/60Hz	CKT BRKR, 5 AMP TWO POLE	60078002
F2	ALL	FUSE 0.2A, 250V TIME DELAY CERAMIC	60132701
FH2		FUSE HOLDER, IN LINE, .25 X 1.25	PP10765
K3	120V-50/60Hz	RELAY, 24VAC, 30A SPST	PP11058
	208-240V 50/60HZ	RELAY, 24VAC, 30A DPST	60104701
LS4	ALL	SWITCH, PROXIMITY MAGNETIC	85325001
		SWITCH, ACTUATOR MAGNETIC	PP10263
M1	120V-50/60Hz 230V-50/60Hz	MOTOR AND PUMP 1/2HP, 8GPM	60130601