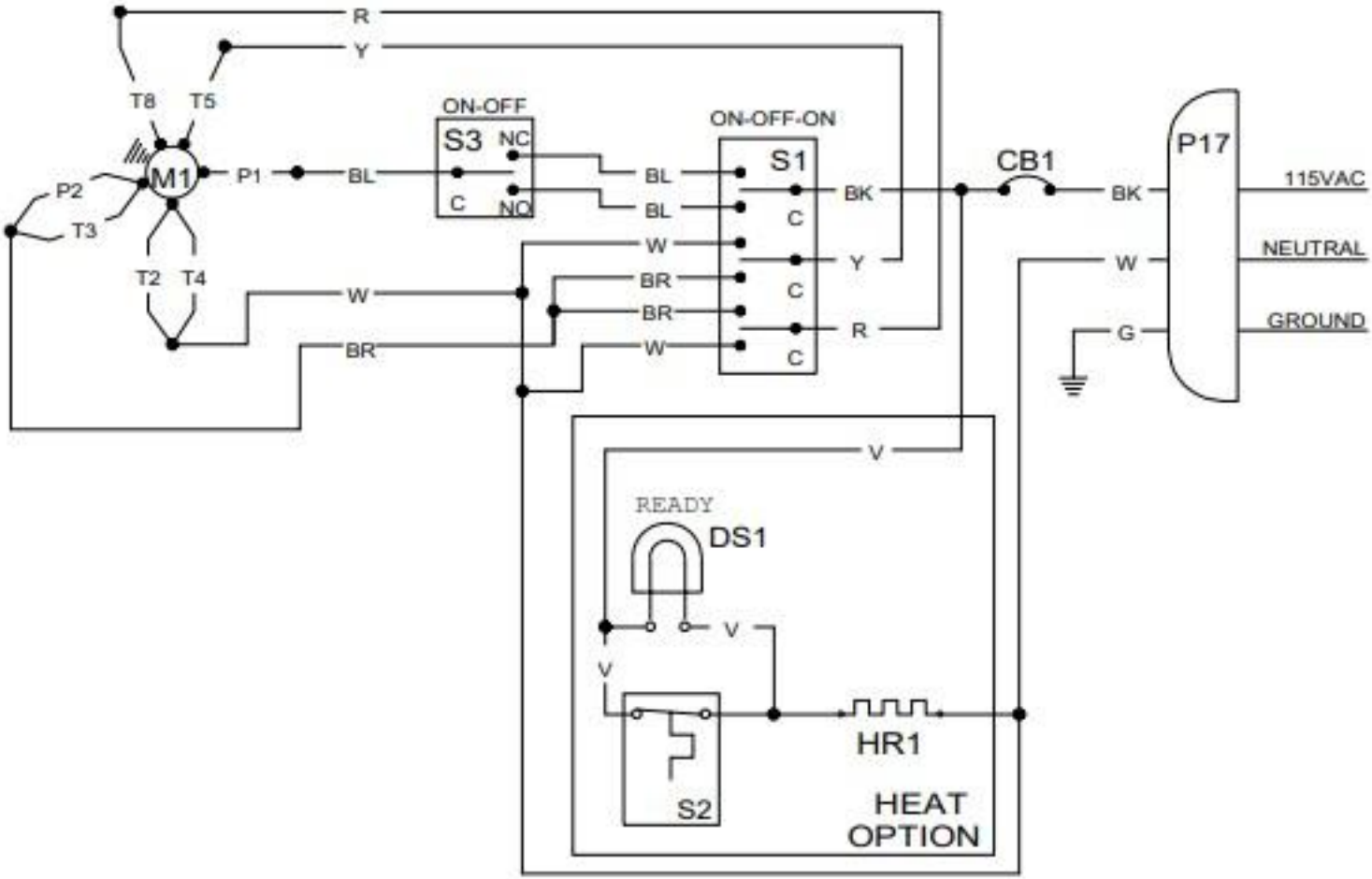
R
Y
T8
T5
M1
P2
T3
T2
T4
P1
BL
W
BR
ON-OFF
S3
NC
C
NO
ON-OFF-ON
S1
BL
BL
W
BR
BR
W
BK
C
Y
C
R
C
CB1
BK
W
G
P17
115VAC
NEUTRAL
GROUND
V
READY
DS1
V
V
S2
HR1
HEAT
OPTION

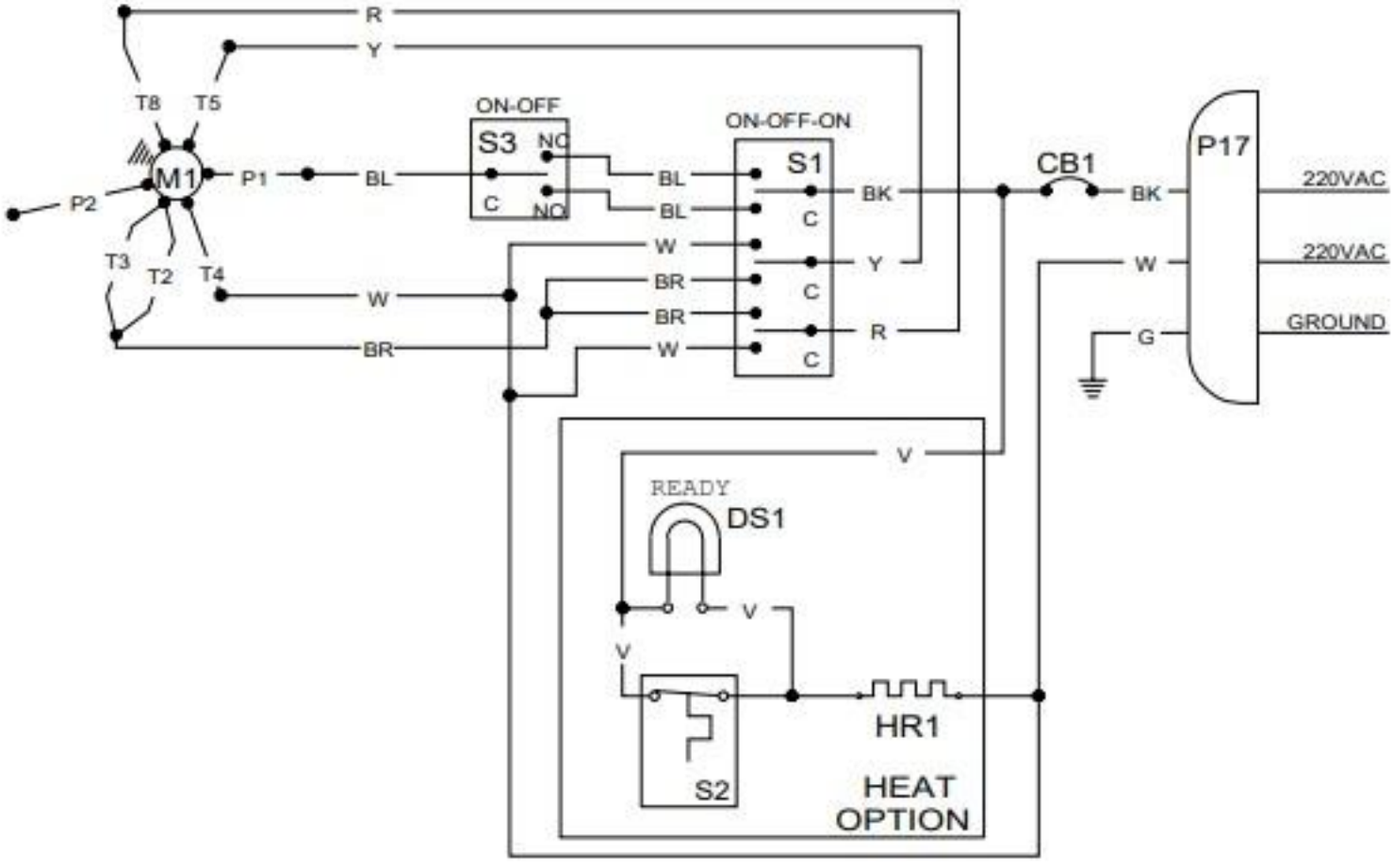
R
Y
T8
T5
M1
P1
P2
T3
T2
T4
BL
W
BR
ON-OFF
S3
NC
C
NO
BL
BL
W
BR
BR
W
ON-OFF-ON
S1
C
C
C
BK
Y
R
CB1
BK
W
G
P17
220VAC
220VAC
GROUND
V
READY
DS1
V
V
S2
HR1
HEAT
OPTION

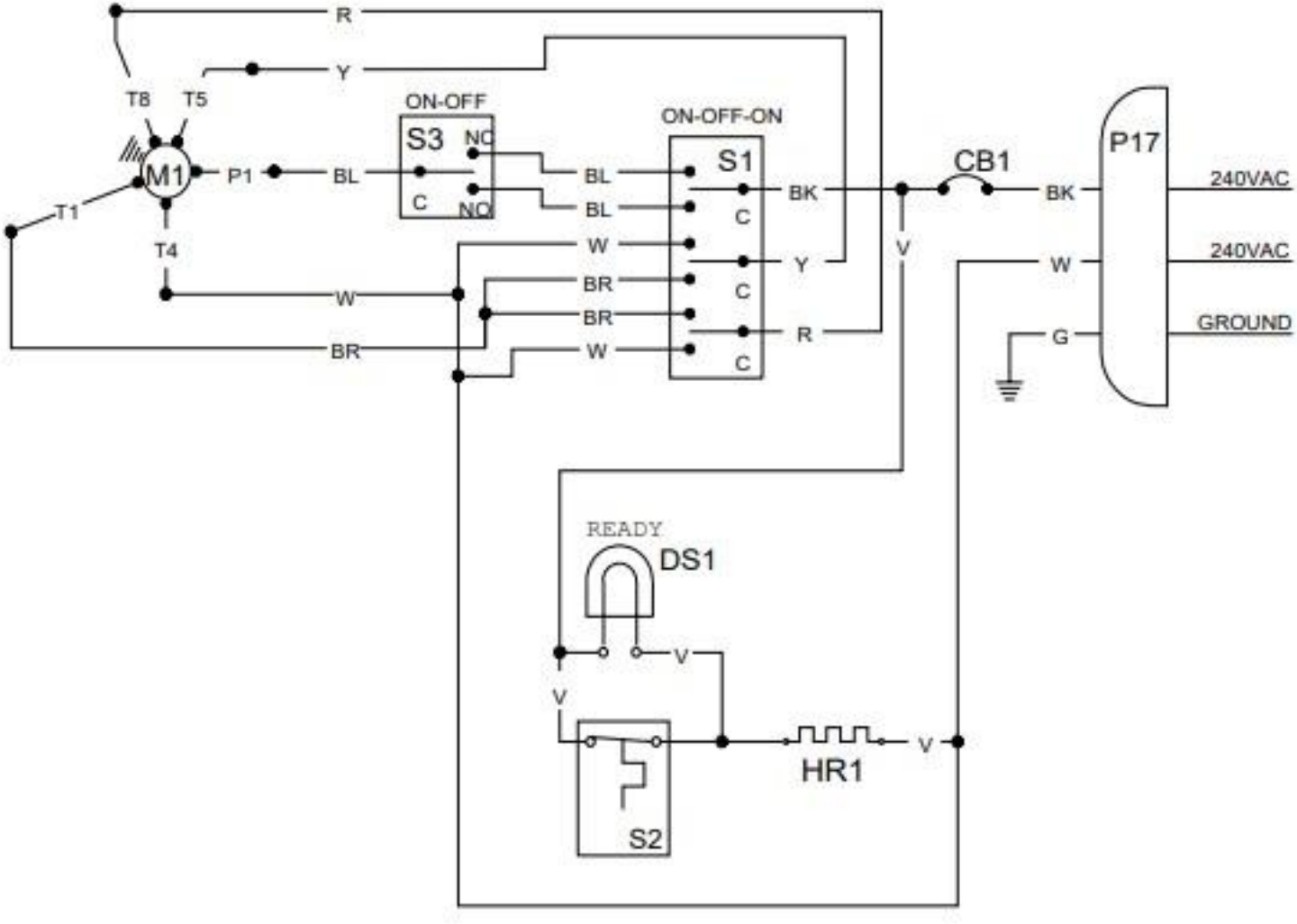
R
Y
T8
T5
M1
P1
BL
T1
T4
W
BR
ON-OFF
S3
NC
C
NO
BL
BL
W
BR
BR
W
ON-OFF-ON
S1
C
C
C
BK
Y
R
V
CB1
BK
W
G
P17
240VAC
240VAC
GROUND
READY
DS1
V
V
S2
HR1
V