TOBIN ELLIS SIGNATURE SERIES BARTENDER STATION
with Wall-Mount Faucet
Featuring the industry's first bartenders' cockpit



JOB	
AREA	
ITEM NO.	
MODEL NO.	

MODELS	
PTE68-A-WF	68" Bartender Station
PTE68-B-WF	68" Bartender Station with Soda Manifold
PTE68-C-WF	68" Bartender Station with Signature Series Ice Vault
PTE80-A-WF	80" Bartender Station

Note: Countertop not included on all models

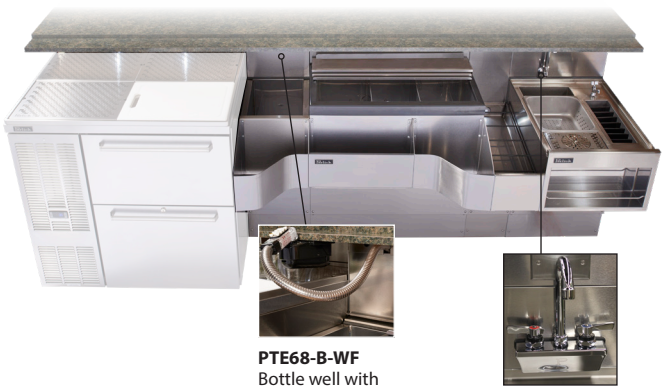

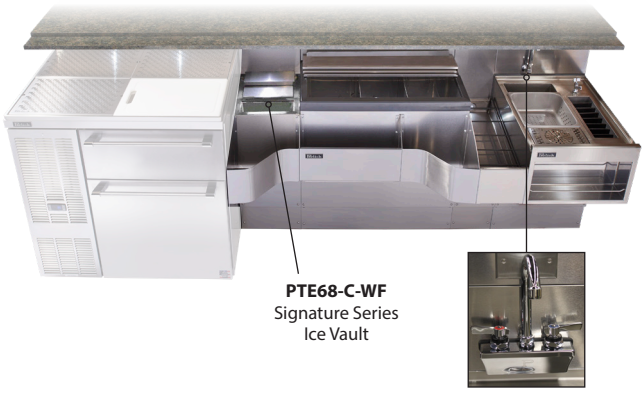

KEY PRODUCT FEATURES AND BENEFITS

- Complete Tobin Ellis Signature Series Bartender Station packages available in two sizes - 68" (PTE68-A-WF, PTE68-B-WF, PTE68-C-WF) or 80" (PTE80-A-WF) to fit your bar design
- Insulated bottle well has capacity to hold (9) 750ml juice bottles or (6) 1-liter store-n-pours
- 30" sectioned ice bin includes standard 10-circuit cold plate with stainless dividers allowing for separated ice storage
- Each part number is a complete bartender station with accessories included for ease of ordering
- The complete bartender station can be configured into larger bar layout with ease and can be connected to other Perlick equipment

Quick Features:

- Perlick exclusive, curved speed rail design allows your bartender to be closer to their work counter and guests
- Slanted liquor step design with wire rack conveniently stores bottles for speedy access
- Prep sink and tool caddy consisting of main sink with integrated glass-rinser, sectional health code compliant tool caddy, wall-mounted faucet (-WF), and an optional built-in cubby for additional storage
- 3 bottle well options are available on the left: Signature Series bottle well, bottle well with soda manifold housing in the rear, and Perlick Signature Series Ice Vault designed by Tobin Ellis for craft ice storage and tempering

Form No. Z2552
Rev. 06.19.24

TOBIN ELLIS SIGNATURE SERIES BARTENDER STATION
with Wall-Mount Faucet
Featuring the industry's first bartenders' cockpit

MODEL NOS.		PTE68-A-WF	PTE68-B-WF	PTE68-C-WF	PTE80-A-WF
DIMENSIONS: EXTERIOR (mm)	**Overall Length**	68"	68"	68"	80"
	Unit Depth	27-9/16" front to back			
	Unit Height	36" free standing, 40-3/8" on modbar	40" free standing, 40-3/8" on modbar	36" free standing, 40-3/8" on modbar	36" free standing, 40-3/8" on modbar
	Mounting	Available as freestanding or on a Perlick Modbar			
	Ice Capacity lbs. (kg)	90 (40.8)			
	Liquor Bottle capacity (750ml)	39	36	31	46
	Shipping Dimensions	68" X 30" X 35"	68" X 30" X 35"	68" X 30" X 35"	80" X 30" X 35"
	Shipping weight	450 lbs	450 lbs	485 lbs	520 lbs
COMPONENT MODEL NUMBERS	**Bottle Well Unit** NSF	Standard bottle well (TSC12IBW)	Bottle well with soda manifold (TSC12IBW-MH)	Ice Vault in place of bottle well (ISC-12) *Note: electrical required*	Extra deep bottle well and standard bottle well w/ manifold housing (TSCE12IBW & TSC12IBW-MH)
	Ice Bin Size NSF	30" (TSC30IC10)			
	Liquor Step NSF	8" slanted (TSCE8SSR)	8" slanted (TSCE8SSR)	8" slanted (TSCE8SSR)	8" slanted w/blender platform (TSCE8SSR-BP)
	Prep Sink NSF	18" sink / glass rinser / tool caddy / and recessed front cubby (TSCE18PSTC-RC)			
	Accessories included	Ice bin cover (ICC-C30), Bin divider (2) (ICC-TSC), Perlick Exclusive curved speed rail set (SRC-CL/SRC-S18/SRC-CR), Splash mounted goose neck faucet (934GN-LF), Stainless steel wet waste basket (7055-47)			
	Certifications	Model numbers used in these pre-configured Bartender Stations are NSF listed			
SPECIFICATIONS	**Materials**	Stainless steel, ABS top rim on ice chests			
	Drain Sizes	1/2" NPS Drain - Bottle Wells 1/2"- 14 NPSM Male Drain - Ice Chests 1-1/2" NPS Drain - Prep Sink 1-1/2" NPS Drain - Tool Caddy			
	Cold Plate	10 Circuit cast aluminum cold plate on all models, accepts standard 1/4" ID beverage tubing			
	Ice Vault	R290 refrigerant – 30 grams, 1/10th HP, 115 volt, 60 Hz, 1 Amp, 1 Phase AC, furnished with 8ft power cord			
	Back Splash	6" height and 1" return on top			
	Faucet	4" OC wall mounted Gooseneck Faucet (934GN-LF), 1/2" IPS hot & cold connections			
	Dipperwell faucet	1/2" IPS W/51-9 Nut and tail piece			
	Glass Rinser	1/2" NPS for valve connection for 3/8" flexible hose - glass rinser			
	Legs	1-5/8" Tubular, stainless steel with 1" adjustable thermoplastic foot			
	Sink bowl	9-1/2" x 16-5/16" x 7-3/16" Deep, accommodates optional wet waste pan			

PERLICK CORPORATION 8300 W. Good Hope Rd., Milwaukee, WI 53223 • 800.558.5592 • perlick.com

TOBIN ELLIS SIGNATURE SERIES BARTENDER STATION
with Wall-Mount Faucet
Featuring the industry's first bartenders' cockpit

PTE68-A-WF

Included Equipment

ITEM #	PART NO.	DESCRIPTION	QTY.
A1	TSC12IBW	Insulated Bottle Well, 12", (17" Depth)	1
B1	TSC30IC10	Ice Chest, w/10 Circuit Cold Plate, 30" (17" Depth)	1
B2	ICC-C30	Covers, 3 Piece, Sliding, 30"	1
B3	ICC-TSC	Ice Divider	2
C1	SRC-CL	Speed Rail, Curved, Left End	1
C2	SRC-S18	Speed Rail, Single, 18"	1
C3	SRC-CR	Speed Rail, Curved, Right End	1
D1	TSCE8SSR	Slanted Speed Rack, 8" (27-9/16" Depth)	1
E1	TSCE18PSTC-RC	Utility Sink w/Glass Rinser & Tool Caddy, 18" w/Recessed Cubby (27-9/16" Depth)	1
E2	934GN-LF	Wall Mount Faucet, Goose Neck	1
E3	67420-2-LF	Optional foot pedal shown for proper location only. Needs to be ordered separately.	1
E4	7055-47	Wet Waste Basket, Stainless Steel	1

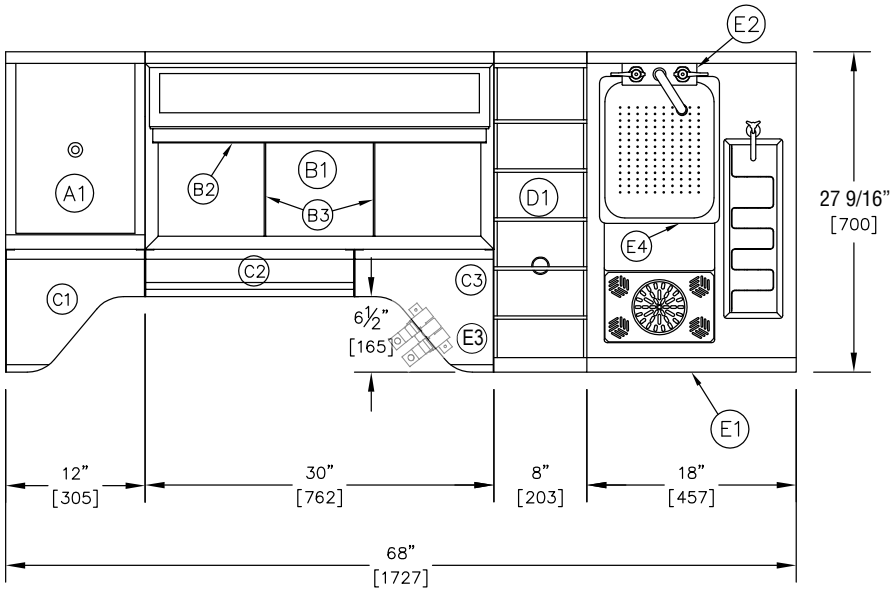

PTE68-A-WF: Top View

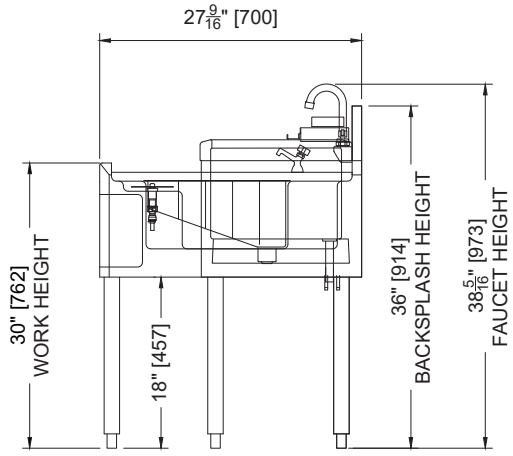

PTE68-A-WF: Right Side View

California Prop 65 Notice:

WARNING: The materials used in this product may contain chemicals known to the State of California to cause cancer and birth defects or other reproductive harm, For more information go to www.P65Warnings.ca.gov.

Form No. Z2552
Rev. 06.19.24

TOBIN ELLIS SIGNATURE SERIES BARTENDER STATION
with Wall-Mount Faucet
Featuring the industry's first bartenders' cockpit

PTE68-B-WF

Included Equipment

ITEM #	PART NO.	DESCRIPTION	QTY.
B1	TSC12IBW-MH	Insulated Bottle Well with Soda Gun, Manifold Housing, 12", (17" Depth)	1
C1	TSC30IC10	Ice Chest, w/10 Circuit Cold Plate, 30" (17" Depth)	1
C2	ICC-C30	Covers, 3 Piece, Sliding, 30"	1
C3	ICC-TSC	Ice Divider	2
D1	SRC-CL	Speed Rail, Curved, Left End	1
D2	SRC-S18	Speed Rail, Single, 18"	1
D3	SRC-CR	Speed Rail, Curved, Right End	1
E1	TSCE8SSR	Slanted Speed Rack, 8" (27-9/16" Depth)	1
F1	TSCE18PSTC-RC	Utility Sink w/Glass Rinser & Tool Caddy, 18" w/Recessed Cubby (27-9/16" Depth)	1
F2	934GN-LF	Wall Mount Faucet, Goose Neck	1
F3	67420-2-LF	Optional foot pedal shown for proper location only. Needs to be ordered separately.	1
F4	7055-47	Wet Waste Basket, Stainless Steel	1

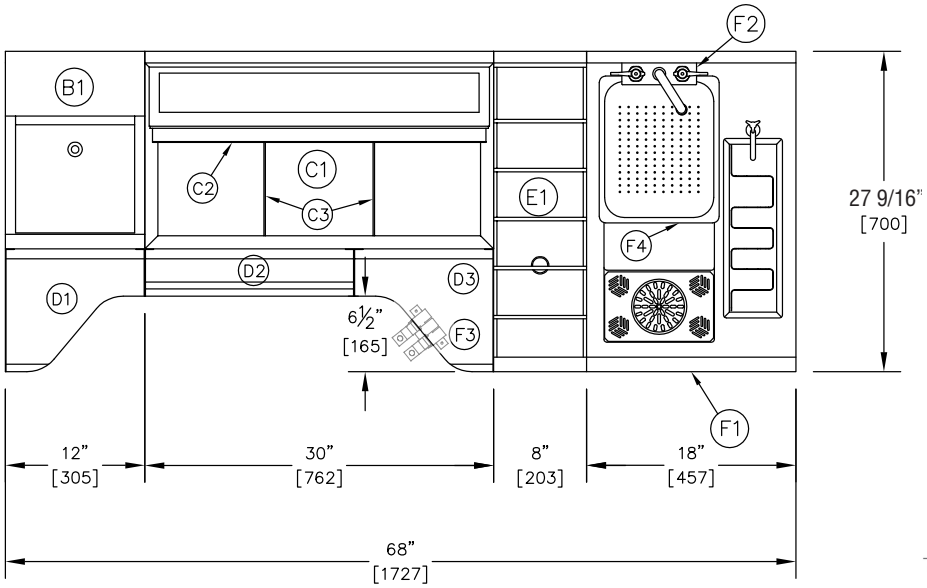

PTE68-B-WF: Top View

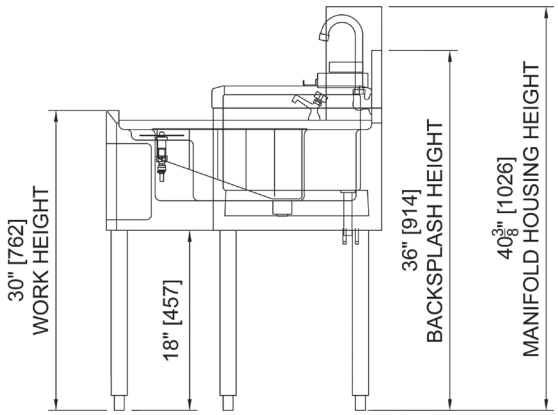

PTE68-B-WF: Right Side View

California Prop 65 Notice:

WARNING: The materials used in this product may contain chemicals known to the State of California to cause cancer and birth defects or other reproductive harm, For more information go to www.P65Warnings.ca.gov.

Form No. Z2552
Rev. 06.19.24

TOBIN ELLIS SIGNATURE SERIES BARTENDER STATION
with Wall-Mount Faucet
Featuring the industry's first bartenders' cockpit

PTE68-C-WF

Included Equipment

ITEM #	PART NO.	DESCRIPTION	QTY.
A1	ISC12	Ice Vault - Large Format Craft Ice Management System	1
B1	TSC30IC10	Ice Chest, w/10 Circuit Cold Plate, 30" (17" Depth)	1
B2	ICC-C30	Covers, 3 Piece, Sliding, 30"	1
B3	ICC-TSC	Ice Divider	2
C1	SRC-CL	Speed Rail, Curved, Left End	1
C2	SRC-S18	Speed Rail, Single, 18"	1
C3	SRC-CR	Speed Rail, Curved, Right End	1
D1	TSCE8SSR	Slanted Speed Rack, 8" (27-9/16" Depth)	1
E1	TSCE18PSTC-RC	Utility Sink w/Glass Rinser & Tool Caddy, 18" w/Recessed Cubby (27-9/16" Depth)	1
E2	934GN-LF	Wall Mount Faucet, Goose Neck	1
E3	67420-2-LF	Optional foot pedal shown for proper location only. Needs to be ordered separately.	1
E4	7055-47	Wet Waste Basket, Stainless Steel	1

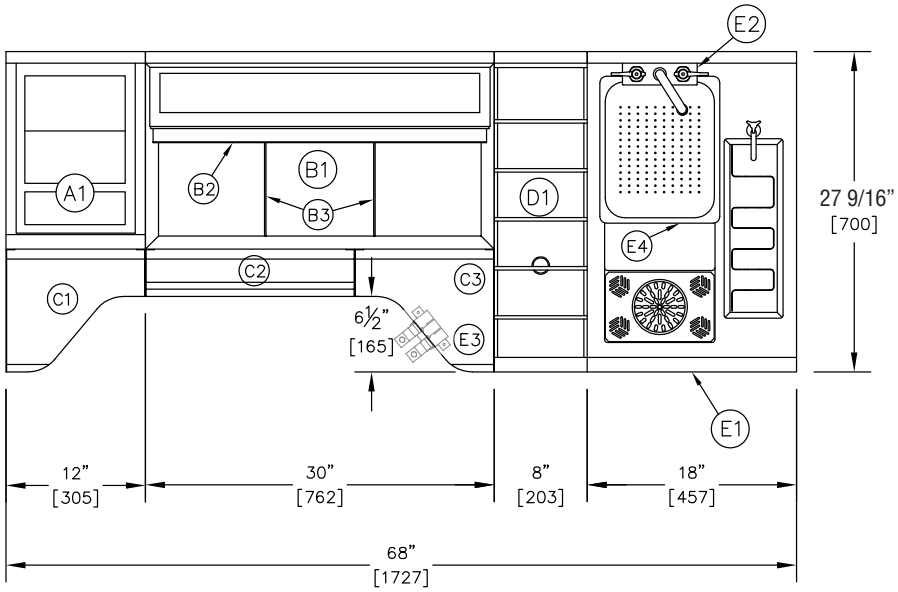

PTE68-C-WF: Top View

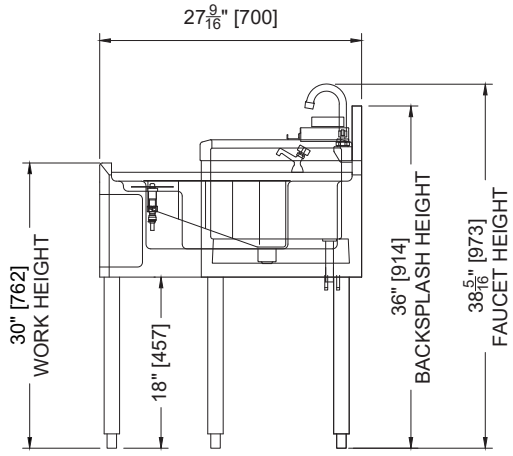

PTE68-C-WF: Right Side View

California Prop 65 Notice:

WARNING: The materials used in this product may contain chemicals known to the State of California to cause cancer and birth defects or other reproductive harm, For more information go to www.P65Warnings.ca.gov.

Form No. Z2552
Rev. 06.19.24

TOBIN ELLIS SIGNATURE SERIES BARTENDER STATION
with Wall-Mount Faucet
Featuring the industry's first bartenders' cockpit

PTE80-A-WF

Included Equipment

ITEM #	PART NO.	DESCRIPTION	QTY.
A1	TSCE12IBW	Insulated Bottle Well, 12", (27-9/16" Depth)	1
A2	TSC12IBW-MH	Insulated Bottle Well, w/Manifold Housing, 12" (17" Depth)	1
B1	TSC30IC10	Ice Chest, w/10 Circuit Cold Plate, 30" (17" Depth)	1
B2	ICC-C30	Covers, 3 Piece, Sliding, 30"	1
B3	ICC-TSC	Ice Divider	2
C1	SRC-CL	Speed Rail, Curved, Left End	1
C2	SRC-S18	Speed Rail, Single, 18"	1
C3	SRC-CR	Speed Rail, Curved, Right End	1
D1	TSCE8SSR-BP	Slanted Speed Rack with Blender Platform, 8" (27-9/16" Depth)	1
E1	TSCE18PSTC-RC	Utility Sink w/Glass Rinser & Tool Caddy, 18" w/Recessed Cubby (27-9/16" Depth)	1
E2	934GN-LF	Wall Mount Faucet, Goose Neck	1
E3	67420-2-LF	Optional foot pedal shown for proper location only. Needs to be ordered separately.	1
E4	7055-47	Wet Waste Basket, Stainless Steel	1

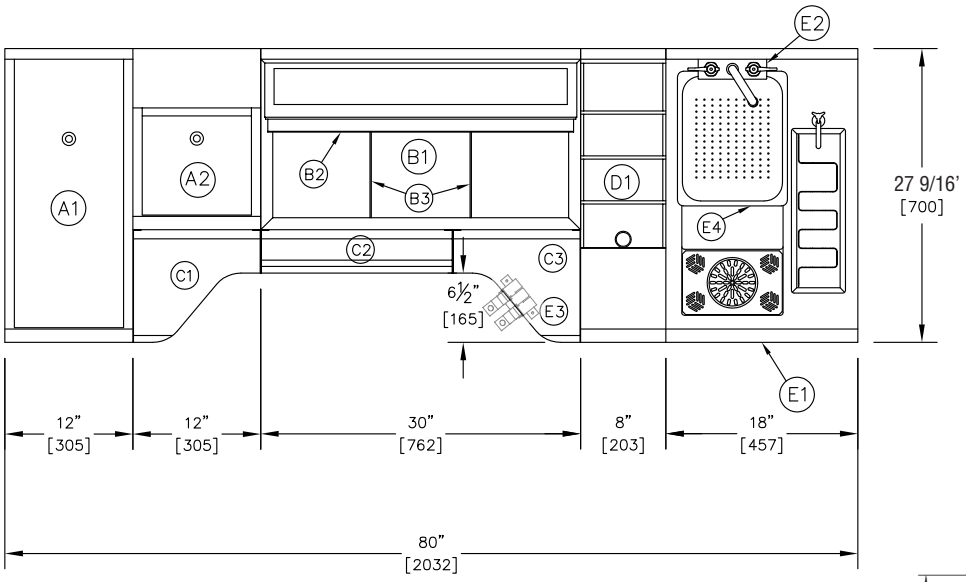

PTE80-A-WF: Top View

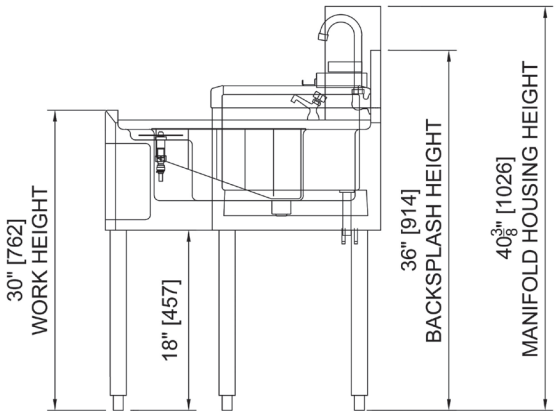

PTE80-A-WF: Right Side View

PERLICK CORPORATION 8300 W. Good Hope Rd., Milwaukee, WI 53223 • 800.558.5592 • perlick.com