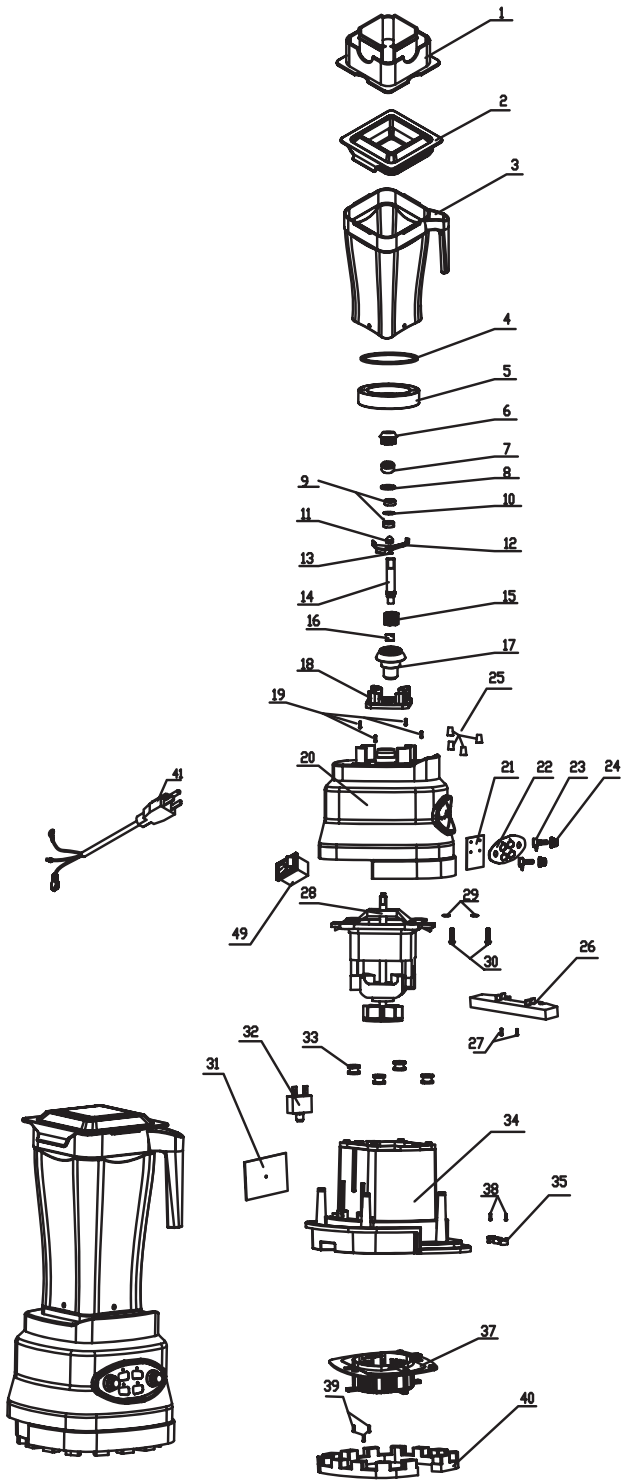

No.	Part #	Description	Extended Description	Qty	Replacement Part?	List Price
1	PBL6-01	Lid Plug	For 64 & 82 Oz. Container	1	Y	$4.00
2	PBL6-02	Lid	For 64 & 82 Oz. Container	1	Y	$12.00
3	PBL6-03-64	Container - 64 Oz.	Eastman Tritan Copolyester	1	Y	$50.00
	PBL6-03-82	Container 82 Oz.	Eastman Tritan Copolyester	1	Y	$70.00
4	PBL6-04	Gasket for Knife Assembly		1	Y	$2.00
5	PBL6-05	Heavy Duty Retainer Nut	Stainless Steel	1	Y	$40.00
	PBL6-KNIFE	Knife Assembly	Parts 6 through 16	1	Y	$46.00
17	PBL6-17	Drive Socket		1	Y	$16.00
NP	PBL6-CONT-64	64 Oz. Container Assembly	Parts 1, 2, 3-64, 4 through 17	1	Y	$140.00
NP	PBL6-CONT-82	82 Oz. Container Assemly	Parts 1, 2, 3-82, 4 through 17	1	Y	$160.00
18	PBL6-18	Container Holder	Rubber	1	Y	$8.00
19	PBL6-19	Screw #1	One (1) Screw	4		
20	PBL6-20S	Upper Housing	Silver	1		
	PBL6-20R	Upper Housing	Red	1		
	PBL6-20W	Upper Housing	White	1		
21	PBL6-21	LED PCB		1		
22	PBL6-22OB1	Name Plate Sticker - Omega	Black, Version 1	1		
23	PBL6-23	Control Switch	One (1) Switch	2		
24	PBL6-24	Control Switch Knob	One (1) Knob	2		
25	PBL6-25	Waterproofing Ring	One (1) Ring	4	Y	$1.00
26	PBL6-26	PCB Bracket		1		
27	PBL6-27-38-39	Screw #2	One (1) Screw	2		
28	PBL6-28-120	Motor 120V		1	Y	$120.00
	PBL6-28-240-5	Motor 240V		1	Y	$120.00
29	PBL6-29	Spring Washer	One (1) Washer	2		
30	PBL6-30	Screw #3	One (1) Screw	2		
31	PBL6-31	Main PCB		1		
32	PBL6-32	Reset Switch		1	Y	$10.00
33	PBL6-33	Motor Dampening Rubber	One (1) Piece	4		
34	PBL6-34B	Lower Housing	Black	1		
35	PBL6-35	Fixing Plate		1		
37	PBL6-37B	Lower Housing Cover	Black	1		
38	PBL6-27-38-39	Screw #2	One (1) Screw	2		
39	PBL6-27-38-39	Screw #2	One (1) Screw	3		
40	PBL6-40	Foot		1	Y	$12.00
41	PCORD	Power Cord 120V	3-Prong	1		
49	PBL6-49	Power Switch 120V/240V	20 Amp	1	Y	$4.00

Omega

REV A, FEB 2012

EXPLODED DRAWING

BLENDER
Model BL600 Series