Wood Oven

Model WO-CN-0018-B

Item 44432

Instruction Manual



STOP

DO NOT RETURN THIS PRODUCT TO THE STORE

For questions or assistance with this product call OMCAN Toll Free:
1 800 465 0234
Customer Service
or
visit the Support section of
www.omcan.com

Revised - 12/07/2021

Toll Free: 1-800-465-0234

Fax: 905-607-0234

Email: service@omcan.com

www.omcan.com

MADE IN CHINA

Table of Contents

Model WO-CN-0018-B

Section	Page
General Information	3 - 4
Safety and Warranty	4 - 6
Technical Specifications	7
Installation	7 - 9
Operation	10 - 11
Parts Breakdown	12 - 13
Notes	14
Warranty Registration	15

General Information

Omcan Manufacturing and Distributing Company Inc., Food Machinery of America, Inc. dba Omcan and Omcan Inc. are not responsible for any harm or injury caused due to any person's improper or negligent use of this equipment. The product shall only be operated by someone over the age of 18, of sound mind, and not under the influence of any drugs or alcohol, who has been trained in the correct operation of this machine, and is wearing authorized, proper safety clothing. Any modification to the machine voids any warranty, and may cause harm to individuals using the machine or in the vicinity of the machine while in operation.

CHECK PACKAGE UPON ARRIVAL

Upon receipt of an Omcan shipment please inspect for external damage. If no damage is evident on the external packaging, open carton to ensure all ordered items are within the box, and there is no concealed damage to the machine. If the package has suffered rough handling, bumps or damage (visible or concealed), please note it on the bill of lading before accepting the delivery and contact Omcan within 24 hours, so we may initiate a claim with the carrier. A detailed report on the extent of the damage caused to the machine must be filled out within three days, from the delivery date shown in the shipping documents. Omcan has no recourse for damaged products that were shipped collect or third party.

Before operating any equipment, always read and familiarize yourself with all operation and safety instructions.

Omcan would like to thank you for purchasing this machine. It's of the utmost importance to save these instructions for future reference. Also save the original box and packaging for shipping the equipment if servicing or returning of the machine is required.

Omcan Fabrication et distribution Companie Limité et Food Machinery d'Amerique, dba Omcan et Omcan Inc. ne sont pas responsables de tout dommage ou blessure causé du fait que toute personne ait utilisé cet équipement de façon irrégulière. Le produit ne doit être exploité que par quelqu'un de plus de 18 ans, saine d'esprit, et pas sous l'influence d'une drogue ou d'acohol, qui a été formé pour utiliser cette machine correctement, et est vêtu de vêtements de sécurité approprié. Toute modification de la machine annule toute garantie, et peut causer un préjudice à des personnes utilisant la machine ou des personnes à proximité de la machine pendant son fonctionnement.

VÉRIFIEZ LE COLIS DÈS RÉCEPTION

Dès réception d'une expédition d'Omcan veuillez inspecter pour dommages externes. Si aucun dommage n'est visible sur l'emballage externe, ouvrez le carton afin de s'assurer que tous les éléments commandés sont dans la boîte, et il n'y a aucun dommage dissimulé à la machine. Si le colis n'a subi aucune mauvaises manipulations, de bosses ou de dommages (visible ou cachée), notez-le sur le bond de livraison avant d'accepter la livraison et contactez Omcan dans les 24 heures qui suivent, pour que nous puissions engager une réclamation auprès du transporteur. Un rapport détaillé sur l'étendue des dommages causés à la machine doit être rempli dans un délai de trois jours, à compter de la date de livraison indiquée dans les documents d'expédition. Omcan n'a aucun droit de recours pour les produits endommagés qui ont été expédiées ou cueilli par un tiers transporteur.

General Information

Avant d'utiliser n'importe quel équipement, toujours lire et vous familiariser avec toutes les opérations et les consignes de sécurité.

Omcan voudrais vous remercier d'avoir choisi cette machine. Il est primordial de conserver ces instructions pour une référence ultérieure. Également conservez la boîte originale et l'emballage pour l'expédition de l'équipement si l'entretien ou le retour de la machine est nécessaire.

Omcan Empresa De Fabricacion Y Distribucion Inc. Y Maquinaria De Alimentos De America, Inc. dba Omcan y Omcan Inc. no son responsables de ningun daño o perjuicío causado por cualquier persona inadecuada o el uso descuidado de este equipo. El producto solo podra ser operado por una persona mayor de 18 años, en su sano juicio y no bajo alguna influencia de droga o alcohol, y que este ha sido entrenado en el correcto funcionamiento de esta máquina, y ésta usando ropa apropiada y autorizada. Cualquier modificación a la máquina anúla la garantía y puede causar daños a las personas usando la máquina mientras esta en el funcionamiento.

REVISE EL PAQUETE A SU LLEGADA

Tras la recepcion de un envio Omcan favor inspeccionar daños externos. Si no hay daños evidentes en el empaque exterior, Habra el carton para asegurararse que todos los articulos solicitados ésten dentro de la caja y no encuentre daños ocultos en la máquina. Si el paquete ha sufrido un manejo de poco cuidado, golpes o daños (visible o oculto) por favor anote en la factura antes de aceptar la entrega y contacte Omcan dentro de las 24 horas, de modo que podamos iniciar una reclamación con la compañia. Un informe detallado sobre los daños causados a la máquina debe ser llenado en el plazo de tres días, desde la fecha de entrega que se muestra en los documentos de envío. Omcan no tiene ningun recurso por productos dañados que se enviaron a recoger por terceros.

Antes de utilizar cualquier equipo, siempre lea y familiarizarse con todas las instrucciones de funcionamiento y seguridad.

Omcan le gustaría darle las gracias por la compra de esta máquina. Es de la mayor importancia para salvar estas instrucciones para futuras consultas. Además, guarda la caja original y el embalaje para el envío del equipo si servicio técnico o devolución de la máquina que se requiere.

Safety and Warranty

SAFETY LEGAL DISCLAIMER

Please read the legal disclaimer fully before assembling, installing and using/servicing your wood oven. Failure to do so could result in property damage, serious bodily injury or even death.

- The wood oven is designed for outdoor use only. The wood oven must always be placed outdoors, away from structures and never inside a building or a garage or in proximity to any enclosed area. Place your

wood oven on a sturdy, level and non-flammable surface and keep it clear and free from flammable or combustible materials, gasoline and other flammable vapors and liquids.

- Be aware of any local laws or regulations that may specify a required distance between outdoor cookers and any structures, or that may limit outdoor flame of any type during drought or other hazardous periods.
- Do not install or use your wood oven in or on boats or recreational vehicles.
- Do not use your wood oven in high winds.
- Your wood oven is not intended to be a heater.
- Toxic fumes can accumulate and may present a hazardous environment.
- Flames can blow outside of the metal enclosure:
  - At the back where the fire is located.
  - From the front of the oven when you open the door.
  - From the top of the chimney.
- Please keep away from the wood oven's openings and warn others around you.
- Improper installation, adjustment, alteration, service or maintenance of your wood oven may cause injury or property damage. Therefore, do not use your wood oven unless it is assembled completely and all parts are securely fastened and tightened.
- Your wood oven should be inspected on a regular basis.
- When using the pellet burner be sure to add the pellets gradually to reach an optimum temperature. Adding too many pellets will increase the size of the flame, making it more difficult to control and risking damage to your wood oven or putting you in danger.
- When using your wood oven, there is a risk for your hands to be burned. You should never set hot items on or near combustible surfaces. DO NOT touch any metal parts when your wood oven is operating. Only touch the wooden/plastic handles to open the door and lift the fuel hatch.
- Never leave your wood oven unattended. Be aware of hazards (dry leaves, decking and other combustible materials) that may be in proximity to the wood oven while it is in use as they may present a fire hazard if any sparks are allowed to come into contact with them.
- Keep all electrical cords away from your wood oven.
- The wood oven is to be used by those trained to operate it only.
- Keep children, pets, and combustible items away from your wood oven at all times.
- Do not attempt to remove any parts or move your wood oven when it is hot or while it is operating.
- DO NOT leave any hazardous objects such as lighters or barbecue lighting fluid next to your wood oven.
- The wood oven remains hot even after visible flames have been extinguished. Allow a minimum of 2 hours for it to cool down completely. DO NOT cover the wood oven immediately after it has been used and make sure all the fire and glowing embers have been completely extinguished before storing it.
- The approximate temperature of your wood oven (during use) ranges from 250°F (120°C) to 1000°F (550°C).
- The wood oven is safe and hazard free when used as intended and according to safety guidelines, and will provide years of trouble-free use and enjoyment. It is the users' responsibility to maintain safe operation of the wood oven and to exercise reasonable standards of care at all times.

OMCAN DOES NOT ACCEPT ANY RESPONSIBILITY, LEGAL OR OTHERWISE, FOR THE INCIDENTAL OR CONSEQUENTIAL DAMAGE TO PROPERTY OR PERSONS RESULTING FROM THE USE OF THE WOOD OVEN WHICH DOES/DID NOT COMPLY WITH ANY OF THE PROVISIONS OF THE DISCLAIMER.

Safety and Warranty

OMCAN SHALL IN NO EVENT BE LIABLE FOR ANY SPECIAL, INDIRECT, CONSEQUENTIAL OR OTHER DAMAGES OF ANY NATURE WHATSOEVER IN EXCESS OF THE ORIGINAL PURCHASE PRICE OF THE WOOD OVEN.

Do not use the barbecue in a confined and/or habitable space e.g. houses, tents, caravans, motor homes, boats. Doing so will present danger of carbon monoxide poisoning.

WARNING:

- This barbecue/oven will become very hot.
- Do not move it during operation.
- Do not use indoors.
- Keep children and pets away.
- Do not use spirit or petrol for lighting or re-lighting. Use only firelighters complying to EN 1860-3.
- Do not cook before the fuel has a coating of ash.
- The barbecue shall be heated up and the fuel kept red hot for at least 30 min prior to the first cooking.

RESIDENTIAL USERS: Vendor assumes no liability for parts or labor coverage for component failure or other damages resulting from installation in non-commercial or residential applications. The right is reserved to deny shipment for residential usage; if this occurs, you will be notified as soon as possible.

6 MONTHS PART AND LABOUR BENCH WARRANTY

Within the warranty period, contact Omcan Inc. at 1-800-465-0234 to schedule a drop off to either an Omcan authorized service depot in the area, or to an Omcan Service warehouse to repair the equipment.

Unauthorized maintenance will void the warranty. Warranty covers electrical and part failures, not improper use.

Please see https://omcan.com/disclaimer for complete info.

WARNING:

The packaging components are classified as normal solid urban waste and can therefore be disposed of without difficulty.

In any case, for suitable recycling, we suggest disposing of the products separately (differentiated waste) according to the current norms.

DO NOT DISCARD ANY PACKAGING MATERIALS IN THE ENVIRONMENT!

Technical Specifications

Model	WO-CN-0018-B
Body Material	SUS430
Chimney Material	SUS201
Door Material	SUS430
Pizza Stone Dimensions	13” x 13” / 330 x 330mm
Maximum Working Temperature	up to 350°C / 662°F
Dimensions	32.3” x 15.9” x 32.3” / 820 x 405 x 820mm
Packaging Dimensions	22” x 18.5” x 11.8” / 560 x 470 x 300mm
Weight	32.8 lbs. / 14.9 kgs.
Packaging Weight	35.8 lbs. / 16.3 kgs.
Item Number	44432

Installation

1. Open the legs in the direction of the arrow.
2. Use two M5x10 screws to fix the handle to the firebox.
3. Use two M5x10 screws to fix the handle to the door.
4. Insert the chimney hat in the direction of the arrow to chimney pipe.
5. Use two M5x10 screws to fix the handle to the feeder.
6. Insert the chimney in the direction of the arrow.
7. Use four M5x10 screws to fix the feeder to the oven body.
8. Put the pizza stone in the oven and close the door.

Note: to disassemble, reverse these instructions.

Note: All numbers in the below pictures refer to the parts breakdown.

Installation

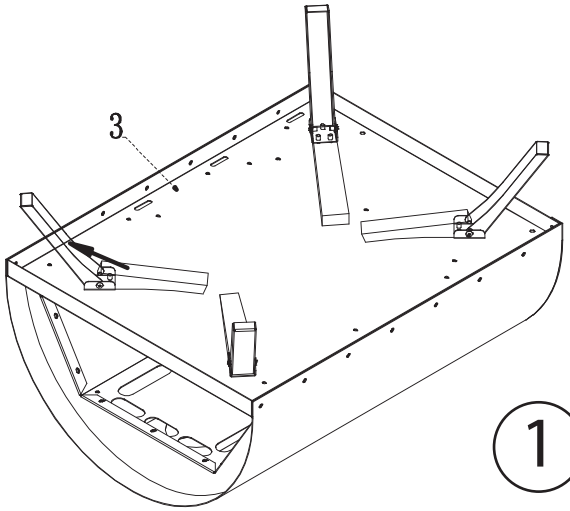

1

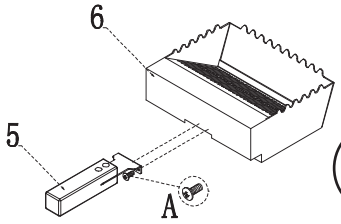

2

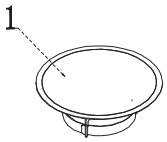

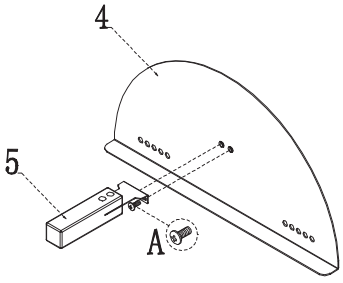

3

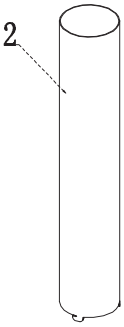

4

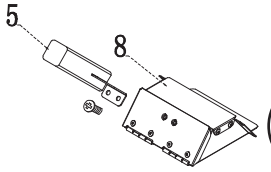

5

Installation

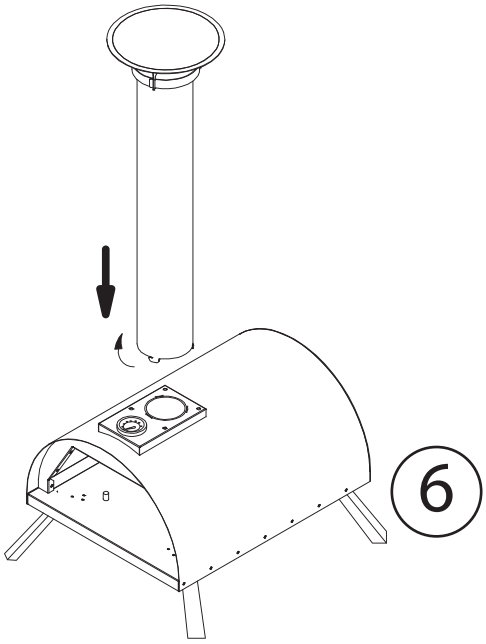

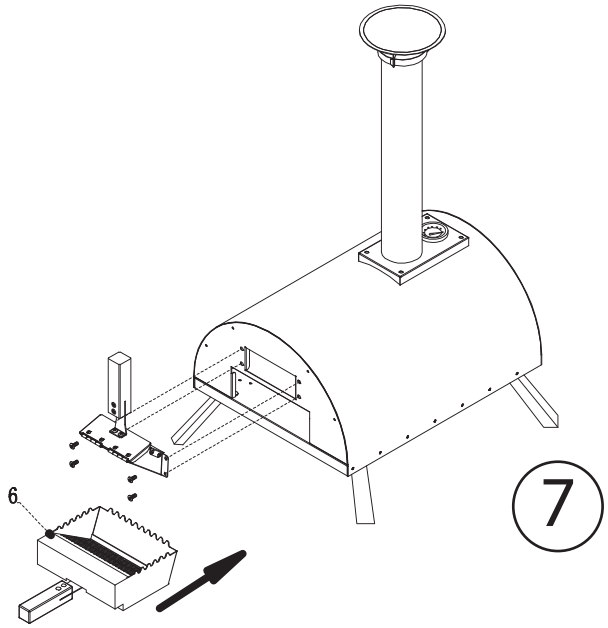

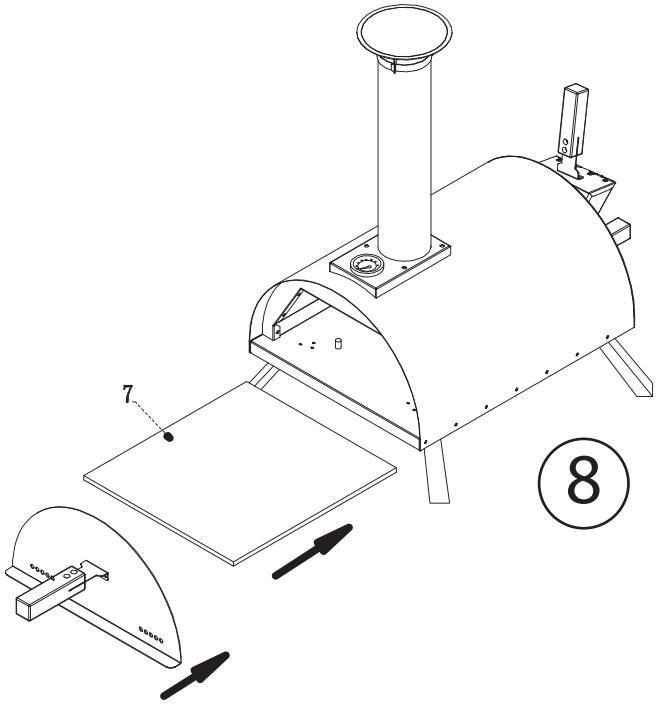

Operation

USAGE METHOD

- Before use, make sure to inspect the unit, ensuring all parts are properly installed. If any abnormalities are found, do not use the unit.

RECOMMENDED FUEL

The recommended fuel is as follows, be sure to only use dry product for fuel:

- Small wood branches.
  - Cut within 10cm long.
  - A natural piece of wood divided into about 1cm.
  - Conifer or broad leaf tree.
- Other wood biomass fuel.
  - Pellets.

Note: Pellets can easily absorb moisture, be sure to keep in an air tight seal when not in use.

PREPARATION BEFORE USE

PIZZA PEEL

Please wash with mild detergent before use. In this case, please wash with a soft sponge, so it may not cause scratches on the surface. Please dry well before use.

PIZZA STONE

Wipe the surface with a soft, slightly damp cloth.
Attention: Do not put the pizza directly on the pizza stone without first lightly oiling the stone.

IGNITION

1. Place the pizza stone in the oven and close the fuel inlet and oven door.
2. The combustion box is taken out from the unit, place between 6-8 wood twigs and about 3 pieces of the pellets.
   Attention: Too much fuel may cause damage to the fuel injection port, combustion box or chimney top.
3. Insert the combustion box into the body by about 3/3 and ignite the ignition material with long axis.
4. After confirming the ignition of the material, insert the combustion box completely, being careful not to force it closed.

ADD FUEL

After ignition, open the firebox and check the combustion state. Only add fuel one set at a time (2 twigs and 1 scoop of pellets). Only add when the embers get weak.

Operation

COOKING PIZZA

1. Add fuel until the desired temperature is achieved (about 15 minutes to 300°C and 25 minutes to 400°C).
2. Add one more set of fuel just before placing the pizza in the oven.
3. After confirming the fuel is burning, close the firebox.
4. Place the pizza on the pizza peel.
   Attention: Hold the pizza peel horizontally.
5. Remove the oven door and carry the pizza peel horizontally into the oven. After removing the peel, close the door.
6. In the oven, the back of the unit warms up the quickest. Check the pizza after 10 to 20 seconds to ensure the back does not burn and rotate the pizza as needed until fully cooked.
7. Make sure the pizza is cooked, remove the door and remove the pizza with the pizza peel. Close the door to ensure the temperature does not drop.

Repeat the above process for more pizzas.

Parts Breakdown

Model WO-CN-0018-B *44432*

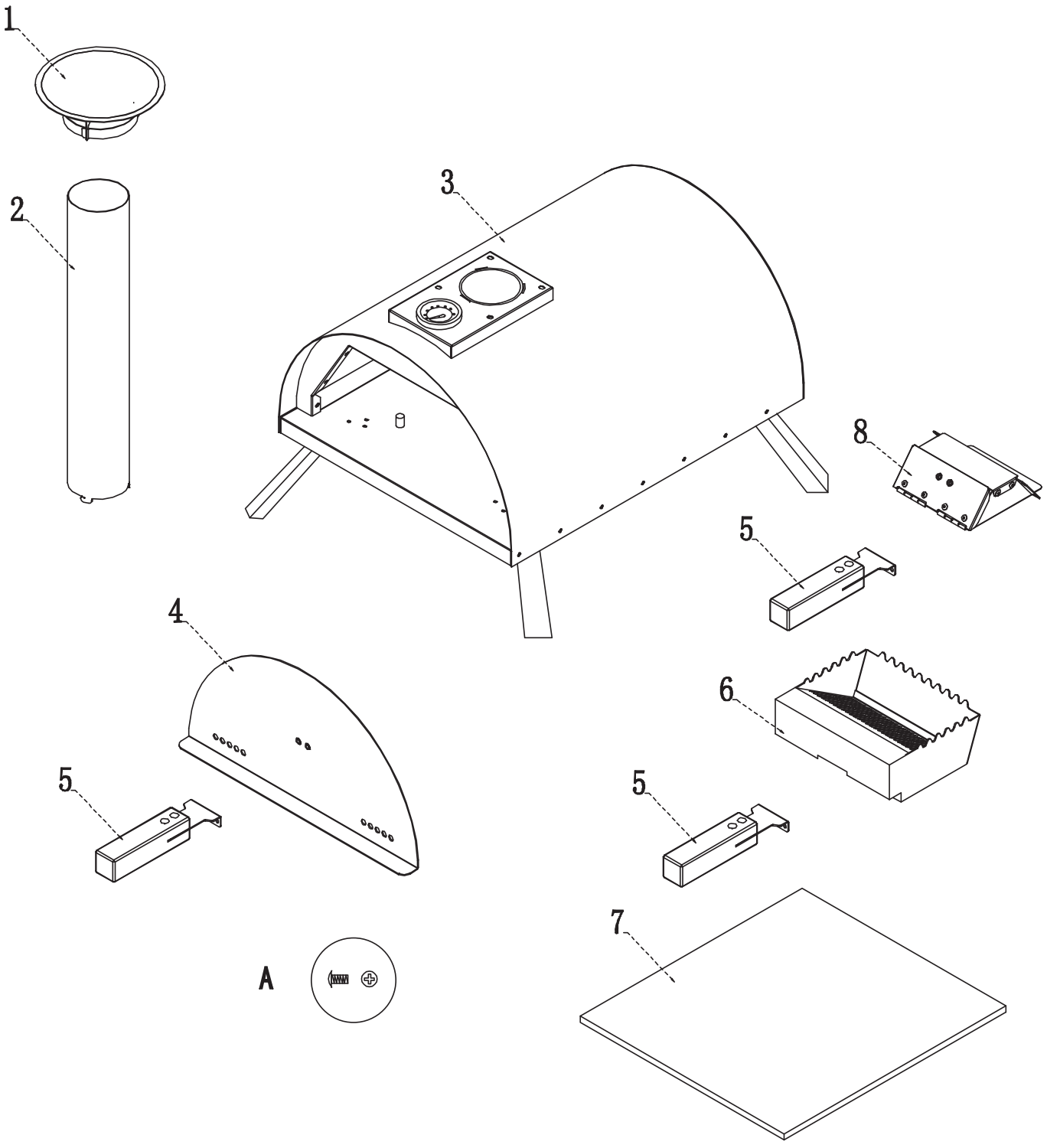

Parts Breakdown

Model WO-CN-0018-B *44432*

Item No.	Description	Position
AI409	Chimney Hat for 44432	1
AI410	Chimney Pipe for 44432	2
AI411	Oven Body for 44432	3

Item No.	Description	Position
AI412	Door for 44432	4
AI413	Handle for 44432	5
AI414	Firebox for 44432	6

Item No.	Description	Position
AI415	Pizza Stone for 44432	7
AI416	Feeder for 44432	8
AI417	Screw M5x10 SUS201 for 44432	A

Notes

Warranty Registration

Thank you for purchasing an Omcan product. To register your warranty for this product, complete the information below, tear off the card at the perforation and then send to the address specified below. You can also register online by visiting:

Merci d'avoir acheté un produit Omcan. Pour enregistrer votre garantie pour ce produit, complétez les informations ci-dessous, détachez la carte au niveau de la perforation, puis l'envoyer à l'adresse spécifié ci-dessous. Vous pouvez également vous inscrire en ligne en visitant:

Gracias por comprar un producto Omcan usted. Para registrar su garantía para este producto, complete la información a continuación, cortar la tarjeta en la perforación y luego enviarlo a la dirección indicada a continuación. También puede registrarse en línea en:

https://omcan.com/warranty-registration/

For mailing in Canada

Pour postale au Canada

Por correo en Canadá

OMCAN
PRODUCT WARRANTY REGISTRATION
3115 Pepper Mill Court,
Mississauga, Ontario
Canada, L5L 4X5

For mailing in the US

Pour diffusion aux États-Unis

Por correo en los EE.UU.

OMCAN
PRODUCT WARRANTY REGISTRATION
4450 Witmer Industrial Estates, Unit 4,
Niagara Falls, New York
USA, 14305

or email to: service@omcan.com

Purchaser's Information

Name: _____ Company Name: _____

Address: _____

Telephone: _____

City: _____ Province or State: _____ Postal or Zip: _____ Email Address: _____

Country: _____ Type of Company:

☐ Restaurant ☐ Bakery ☐ Deli

Dealer from which Purchased: _____ ☐ Butcher ☐ Supermarket ☐ Caterer

Dealer City: _____ Dealer Province or State: _____ ☐ Institution *(specify)*: _____

Invoice: _____ ☐ Other *(specify)*: _____

Model Name: _____ Model Number: _____ Serial Number: _____

Machine Description: _____

Date of Purchase (MM/DD/YYYY): _____ Date of Installation (MM/DD/YYYY): _____

Would you like to extend the warranty? ☐ Yes ☐ No

Thank you for choosing Omcan | Merci d'avoir choisi Omcan | Gracias por elegir Omcan

Since 1951 Omcan has grown to become a leading distributor of equipment and supplies to the North American food service industry. Our success over these many years can be attributed to our commitment to strengthen and develop new and existing relationships with our valued customers and manufacturers. Today with partners in North America, Europe, Asia and South America, we continually work to improve and grow the company. We strive to offer customers exceptional value through our qualified local sales and service representatives who provide convenient access to over 6,500 globally sourced products.

Depuis 1951 Omcan a grandi pour devenir un des “leaders” de la distribution des équipements et matériel pour l’industrie des services alimentaires en Amérique du Nord. Notre succès au cours de ces nombreuses années peut être attribué à notre engagement à renforcer et à développer de nouvelles et existantes relations avec nos clients et les fabricants de valeur. Aujourd’hui avec des partenaires en Amérique du Nord, Europe, Asie et Amérique du Sud, nous travaillons continuellement à améliorer et développer l’entreprise. Nous nous efforçons d’offrir à nos clients une valeur exceptionnelle grâce à nos ventes locales qualifiées et des représentants de service qui offrent un accès facile à plus de 6500 produits provenant du monde entier.

Desde 1951 Omcan ha crecido hasta convertirse en un líder en la distribución de equipos y suministros de alimentos en América del Norte industria de servicios. Nuestro éxito en estos años se puede atribuir a nuestro compromiso de fortalecer y desarrollar nuevas relaciones existentes con nuestros valiosos clientes y fabricantes. Hoy con socios de América del Norte, Europa, Asia y América del Sur, que trabajan continuamente para mejorar y crecer la empresa. Nos esforzamos por ofrecer a nuestros clientes valor excepcional a través de nuestro local de ventas y representantes de los servicios que proporcionan un fácil acceso a más de 6,500 productos con origen a nivel mundial.

