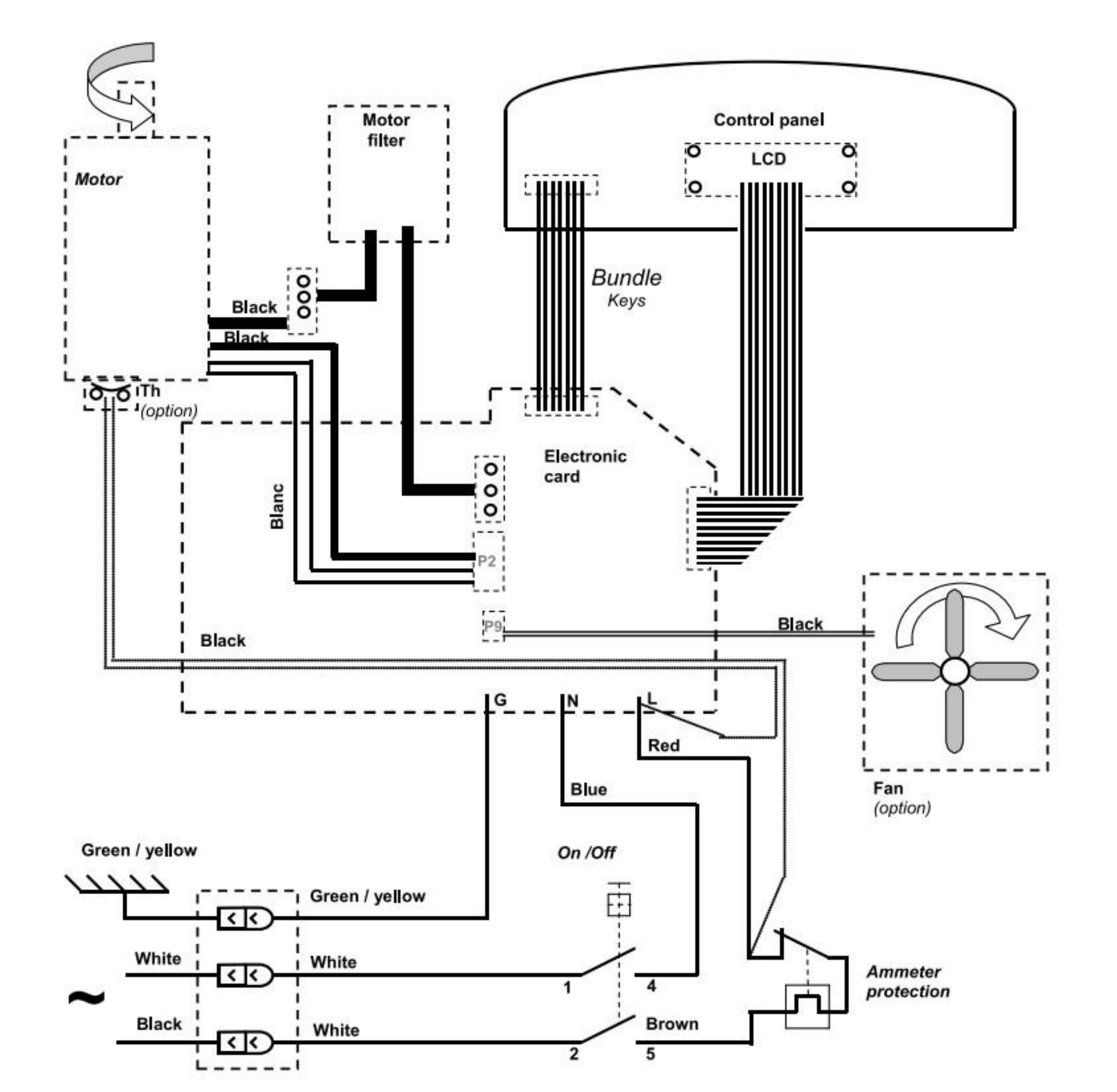
Motor
Motor filter
Control panel
LCD
Bundle
Keys
Black
Black
iTh
(option)
Electronic card
Blanc
P2
P9
Black
Black
G
N
L
Red
Blue
Fan
(option)
Green / yellow
On /Off
Green / yellow
White
White
1
4
~
Black
White
Brown
2
5
Ammeter protection