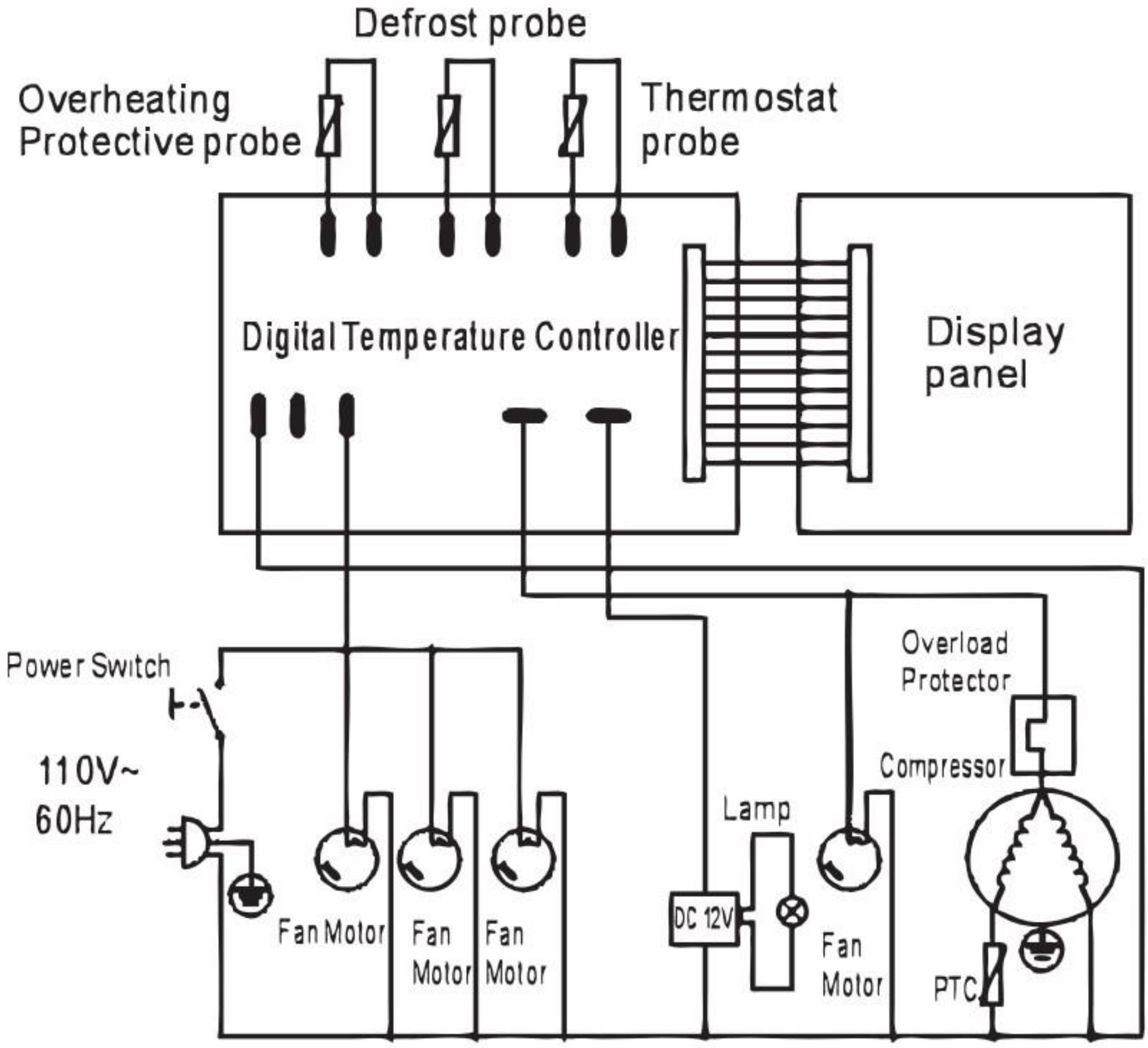
Defrost probe
Overheating
Protective probe
Thermostat
probe
Digital Temperature Controller
Display
panel
Power Switch
110V~
60Hz
Overload
Protector
Compressor
Lamp
DC 12V
Fan Motor
Fan
Motor
Fan
Motor
Fan
Motor
PTC

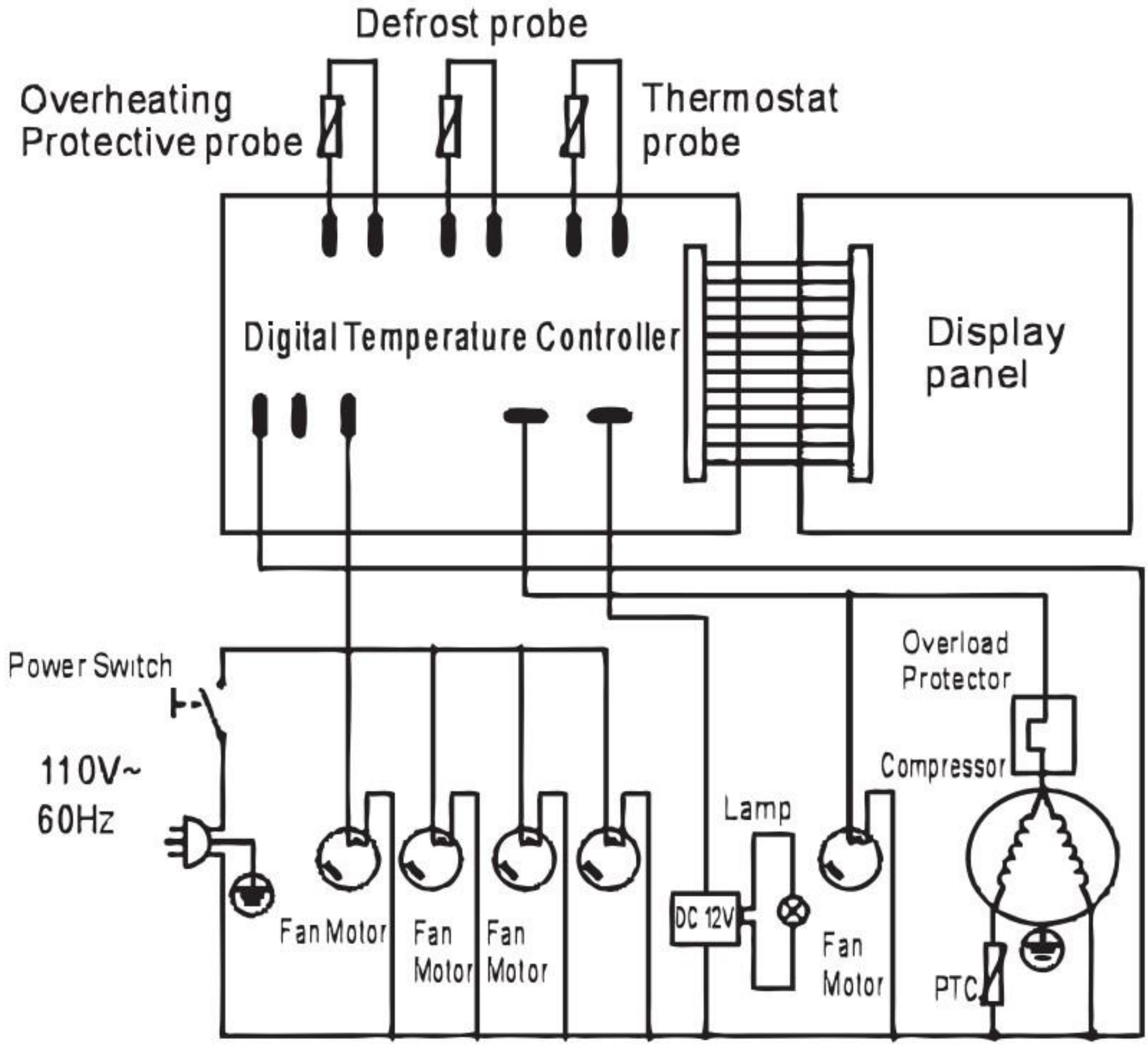
Defrost probe
Overheating
Protective probe
Thermostat
probe
Digital Temperature Controller
Display
panel
Power Switch
110V~
60Hz
Overload
Protector
Compressor
Lamp
DC 12V
Fan Motor
Fan
Motor
Fan
Motor
Fan
Motor
PTC

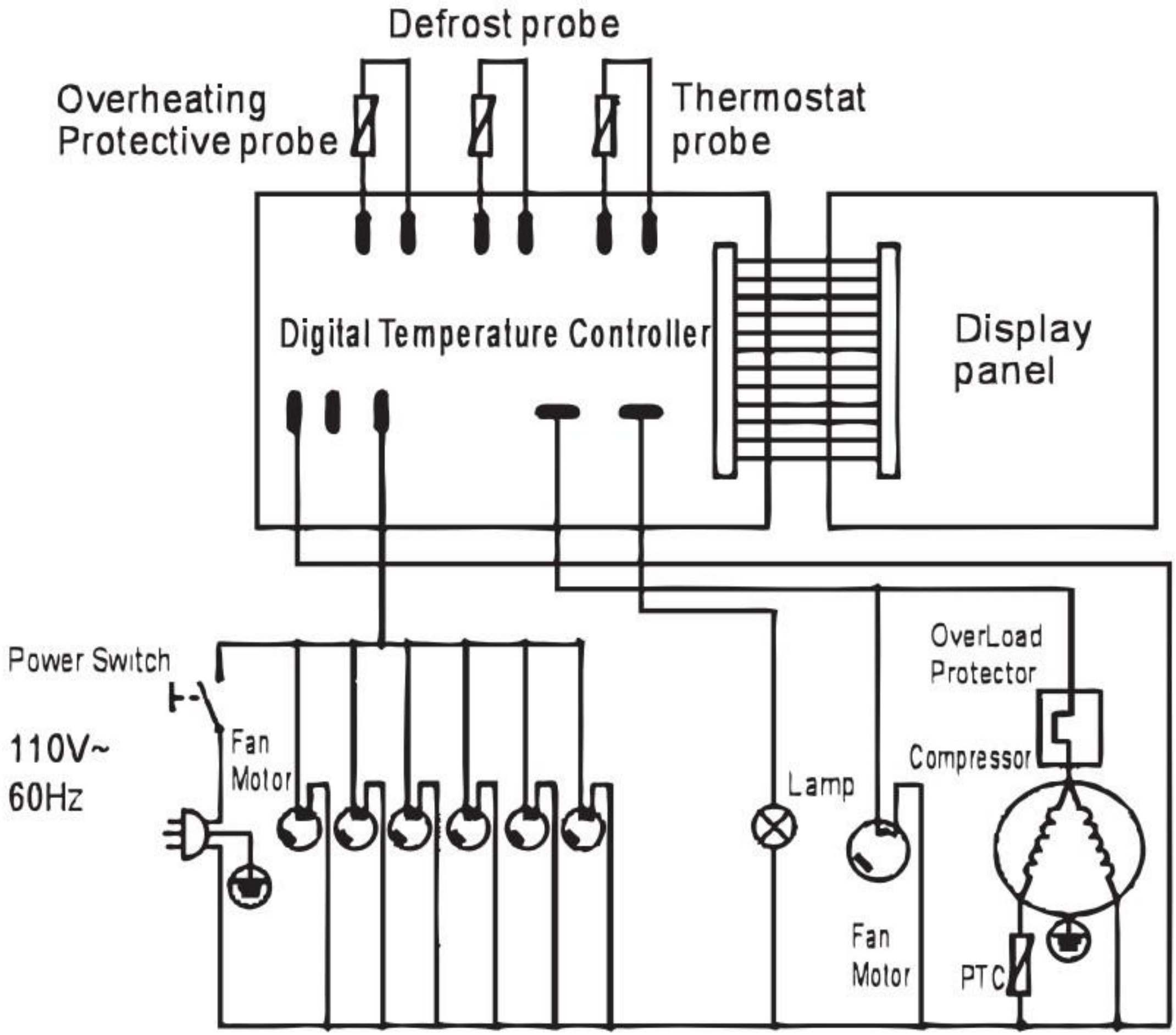
Defrost probe
Overheating
Protective probe
Thermostat
probe
Digital Temperature Controller
Display
panel
Power Switch
110V~
60Hz
Fan
Motor
Lamp
OverLoad
Protector
Compressor
Fan
Motor
PTC