Refrigerated Showcases

Models RS-CN-0120-4, 0160-4, 0202-4
Items 44629, 44630, 44631

Instruction Manual

STOP

DO NOT RETURN THIS PRODUCT TO THE STORE

For questions or assistance with this product call OMCAN Toll Free: 1 800 465 0234 Customer Service or visit the Support section of www.omcan.com

Revised - 11/12/2019

Intertek Intertek

Toll Free: 1-800-465-0234
Fax: 905-607-0234
Email: service@omcan.com
www.omcan.com

MADE IN CHINA

NEMA
5 - 15
125 VAC / 15 AMP
RECEPTACLE

Table of Contents

Model RS-CN-0120-4 / Model RS-CN-0160-4 / Model RS-CN-0202-4

Section	Page
General Information	3 - 4
Safety and Warranty	4 - 6
Technical Specifications	6
Operation	7 - 8
Maintenance	8
Troubleshooting	9
Parts Breakdown	10 - 15
Electrical Schematics	16
Notes	17 - 18
Warranty Registration	19

General Information

Omcan Manufacturing and Distributing Company Inc., Food Machinery of America, Inc. dba Omcan and Omcan Inc. are not responsible for any harm or injury caused due to any person's improper or negligent use of this equipment. The product shall only be operated by someone over the age of 18, of sound mind, and not under the influence of any drugs or alcohol, who has been trained in the correct operation of this machine, and is wearing authorized, proper safety clothing. Any modification to the machine voids any warranty, and may cause harm to individuals using the machine or in the vicinity of the machine while in operation.

CHECK PACKAGE UPON ARRIVAL

Upon receipt of an Omcan shipment please inspect for external damage. If no damage is evident on the external packaging, open carton to ensure all ordered items are within the box, and there is no concealed damage to the machine. If the package has suffered rough handling, bumps or damage (visible or concealed), please note it on the bill of lading before accepting the delivery and contact Omcan within 24 hours, so we may initiate a claim with the carrier. A detailed report on the extent of the damage caused to the machine must be filled out within three days, from the delivery date shown in the shipping documents. Omcan has no recourse for damaged products that were shipped collect or third party.

Before operating any equipment, always read and familiarize yourself with all operation and safety instructions.

Omcan would like to thank you for purchasing this machine. It's of the utmost importance to save these instructions for future reference. Also save the original box and packaging for shipping the equipment if servicing or returning of the machine is required.

Omcan Fabrication et distribution Companie Limité et Food Machinery d'Amerique, dba Omcan et Omcan Inc. ne sont pas responsables de tout dommage ou blessure causé du fait que toute personne ait utilisé cet équipement de façon irrégulière. Le produit ne doit être exploité que par quelqu'un de plus de 18 ans, saine d'esprit, et pas sous l'influence d'une drogue ou d'acohol, qui a été formé pour utiliser cette machine correctement, et est vêtu de vêtements de sécurité approprié. Toute modification de la machine annule toute garantie, et peut causer un préjudice à des personnes utilisant la machine ou des personnes à proximité de la machine pendant son fonctionnement.

VÉRIFIEZ LE COLIS DÈS RÉCEPTION

Dès réception d'une expédition d'Omcan veuillez inspecter pour dommages externes. Si aucun dommage n'est visible sur l'emballage externe, ouvrez le carton afin de s'assurer que tous les éléments commandés sont dans la boîte, et il n'y a aucun dommage dissimulé à la machine. Si le colis n'a subi aucune mauvaises manipulations, de bosses ou de dommages (visible ou cachée), notez-le sur le bond de livraison avant d'accepter la livraison et contactez Omcan dans les 24 heures qui suivent, pour que nous puissions engager une réclamation auprès du transporteur. Un rapport détaillé sur l'étendue des dommages causés à la machine doit être rempli dans un délai de trois jours, à compter de la date de livraison indiquée dans les documents d'expédition. Omcan n'a aucun droit de recours pour les produits endommagés qui ont été expédiées ou cueilli par un tiers transporteur.

General Information

Avant d'utiliser n'importe quel équipement, toujours lire et vous familiariser avec toutes les opérations et les consignes de sécurité.

Omcan voudrais vous remercier d'avoir choisi cette machine. Il est primordial de conserver ces instructions pour une référence ultérieure. Également conservez la boîte originale et l'emballage pour l'expédition de l'équipement si l'entretien ou le retour de la machine est nécessaire.

Omcan Empresa De Fabricacion Y Distribucion Inc. Y Maquinaria De Alimentos De America, Inc. dba Omcan y Omcan Inc. no son responsables de ningun daño o perjuicío causado por cualquier persona inadecuada o el uso descuidado de este equipo. El producto solo podra ser operado por una persona mayor de 18 años, en su sano juicio y no bajo alguna influencia de droga o alcohol, y que este ha sido entrenado en el correcto funcionamiento de esta máquina, y ésta usando ropa apropiada y autorizada. Cualquier modificación a la máquina anúla la garantía y puede causar daños a las personas usando la máquina mientras esta en el funcionamiento.

REVISE EL PAQUETE A SU LLEGADA

Tras la recepcion de un envio Omcan favor inspeccionar daños externos. Si no hay daños evidentes en el empaque exterior, Habra el carton para asegurararse que todos los articulos solicitados ésten dentro de la caja y no encuentre daños ocultos en la máquina. Si el paquete ha sufrido un manejo de poco cuidado, golpes o daños (visible o oculto) por favor anote en la factura antes de aceptar la entrega y contacte Omcan dentro de las 24 horas, de modo que podamos iniciar una reclamación con la compañia. Un informe detallado sobre los daños causados a la máquina debe ser llenado en el plazo de tres días, desde la fecha de entrega que se muestra en los documentos de envío. Omcan no tiene ningun recurso por productos dañados que se enviaron a recoger por terceros.

Antes de utilizar cualquier equipo, siempre lea y familiarizarse con todas las instrucciones de funcionamiento y seguridad.

Omcan le gustaría darle las gracias por la compra de esta máquina. Es de la mayor importancia para salvar estas instrucciones para futuras consultas. Además, guarda la caja original y el embalaje para el envío del equipo si servicio técnico o devolución de la máquina que se requiere.

Safety and Warranty

Handle with care Unplug the wall socket first. Never tilt it over 45 degrees when handling.	**Dry place** Always place the refrigerator in a dry location.

Safety and Warranty

Sufficient space The distance from both sides and back of refrigerator to wall or other substance must be no less than 10 cm (4”). The refrigeration capability may decrease if its surrounding space is too small to circulate air.	**Well ventilated** Always place the refrigerator in an area with proper ventilation. When using for the first time, wait at least 24 hours after handling to start.
Far from heat source Never place the refrigerator in direct sunlight. Never place refrigerator near heat source as it reduces refrigeration capabilities.	**Heavy load** Never put any heavy objects on top of the refrigerator.
Do not make holes Never make any holes on the refrigerator. Do not attach any objects onto the refrigerator.	**Stable Location** Unpack and place the refrigerator on level and stable ground.
Exclusive power socket Normally, the power supply should be 100 – 120V, 60 Hz single phase AC with exclusive single phase receptacle.	**Do not share the socket** Never let the refrigerator share a socket with another appliance. The cable may become hot and this may cause a fire. **DO NOT USE EXTENSION CORDS.**
Protect cables Never break or damage the cables as this may cause current leakage resulting in a fire.	**No water flushing** Never spray down refrigerator with pressurized water supply.
Avoid flammable and explosive objects Never put any flammable or explosive items inside the refrigerator such as gasoline or alcohol. Never put any dangerous products in close proximity to the refrigerator.	**No spray** Do not spray the unit with a flammable substance such as paint. This may result in a fire.
After power break After a power break or unplugging the refrigerator, always wait at least 5 minutes before starting the refrigerator again.	**Medical Storage** No medicine is allowed to be kept inside the refrigerator.

NOTE

- The electric circuit diagram and parameters on the product name plate are subject to change without the manufacturer having to change the manual.
- The design might be improved without notice.
- If the power cord is damaged, it must be replaced by the manufacturer, its service agent or a qualified electrician in order to avoid injury.

WARNING: The unit uses R290 refrigerant. Make sure that all precautions against fire have been taken.

Safety and Warranty

1 YEAR PARTS AND LABOUR WARRANTY

Within the warranty period, contact Omcan Inc. at 1-800-465-0234 to schedule an Omcan authorized service technician to repair the equipment locally.

Unauthorized maintenance will void the warranty. Warranty covers electrical and part failures, not improper use.

Please see https://omcan.com/disclaimer for complete info.

WARNING:

The packaging components are classified as normal solid urban waste and can therefore be disposed of without difficulty.

In any case, for suitable recycling, we suggest disposing of the products separately (differentiated waste) according to the current norms.

DO NOT DISCARD ANY PACKAGING MATERIALS IN THE ENVIRONMENT!

Technical Specifications

Model	**RS-CN-0120-4**	**RS-CN-0160-4**	**RS-CN-0202-4**
Capacity	115L / 4.06 cu. ft.	146L / 5.16 cu. ft.	200L / 7.06 cu. ft.
Refrigerant	R290 (55g)	R290 (65g)	R290 (75g)
Power	295W	330W	400W
Climate	4		
Rated Temperature	0 - 12°C / 32 - 53.6°F		
Protection Class	I		
Electrical	110-120V / 60Hz		
Current	2.7A	3A	3.9A
Lamp Power	2W		
Net Weight	125.7 lbs. / 57 kgs.	145.5 lbs. / 66 kgs.	195.1 lbs. / 88.5 kgs.
Dimensions	27.6” x 22.4” x 27” 702 x 568 x 686mm	34.6” x 22.4” x 27” 880 x 568 x 686mm	48” x 22.4” x 27” 1219 x 568 x 686mm
Item Number	44629	44630	44631

Operation

BEFORE USE

Ensure the unit is upright and positioned in its location for 12 hours prior to use.

Plug the refrigerator in a 110V~ socket exclusively for the unit. After the refrigerator is running, test the air suction to confirm it is sufficiently cold. Then you may put food inside the unit. Make sure the food product is already cooled before placing it in the display case. The unit should not be used to cool food products.

DIGITAL TEMPERATURE CONTROLLER

The digital temperature controller is easy to operate and controls the compressor.

- The main functions are: Temperature display, temperature control, manual control, automatic defrost, light control, value storing, self-testing and parameter locking.

Digital Controller Operation:

1. Set Temperature:
   Press **SET** and the set temperature is displayed.
   Press ▲ or ▼ button to modify and store the displayed value.
   Press **SET** to exit the adjustment and display the cold-room temperature.
2. If no buttons are pressed within 10 seconds, the cold-room temperature will be displayed.
3. Illumination:
   Press the light button, it lights. Press the light button again, the light turns off.
4. Manual start/stop defrost:
   Press the light button and hold for 6 seconds to defrost or stop defrost.
5. Refrigerant LED:
   During refrigeration, the LED is on. When the cold-room temperature is consistent, the LED is off. During the delay start, the LED flashes.
6. Defrost LED:
   During defrosting, the LED is on. When it stops defrosting, the LED is off. During the delay display of defrost, the LED flashes.
7. Digital Controller Reset:
   When the display shows “disorder”, press ▼ button for 2 seconds until buzzer rings, quickly press ▲ button for 6 seconds until the buzzer rings again. The display will flash for 3 seconds and it will be restored to the factory setting.

CAUTION

- Reducing the frequency of opening the refrigerator door will keep more cold air inside the refrigerator.
- Do not block air suction or outlet. Air must continue circulating to increase refrigeration capability.
- Do not over fill or over stock the refrigerator, as it will influence the cooling effect. Adjust the rack height for proper food storage.
- Cool hot food down to room temperature before storing it in the refrigerator.
- Try to reduce open times and keep refrigerator cold and closed, if power is ever off. Only allow a skilled service individual with proper tools to repair damaged power cables. Never touch compressor, as it can result in injury.

Operation

- If supply cord is damaged, it must be replaced by the manufacturer, its service agent, or similarly qualified persons in order to avoid a hazard.
- This appliance is not intended for use by persons (including children) with reduced physical, sensory or mental capabilities, or lack of experience and knowledge, unless they have been given supervision or instruction concerning use of the appliance by a person responsible for their safety.
- Children should be supervised to ensure that they do not play with the appliance.

WARNING: Keep ventilation openings, in the appliance enclosure or in the built-in structure, clear of obstruction.
WARNING: Do not use mechanical devices of other means to accelerate the defrosting process, other than those recommended by the manufacturer.
WARNING: Do not damage the refrigerant circuit.
WARNING: Do not use electrical appliances inside the food storage compartments of the appliance, unless they are of the type recommended by the manufacturer.

CAUTION: Risk of fire. The height of the triangle in the symbol should be at least 15mm.

Maintenance

Keep the refrigerator clean and perform periodical maintenance as necessary. Always unplug the socket before maintenance. Never use a damaged plug or loose socket in order to prevent from electric shock or short circuit. Never flush the refrigerator. Never use alkali detergent, soap, gasoline, acetone or brush.

1. Clean outside:
   Dip soft cloth in neutral detergent (tableware detergent) to clean the outside of the refrigerator and then wipe it with dry soft cloth.
2. Clean inside:
   Take rack out for cleaning with water. Use soft cloth to wipe the box.
3. Shut down refrigerator for a long time:
   Take all food out and unplug the wall socket. Clean both inside and outside of the refrigerator thoroughly and open the door for sufficient dry. The glass breaks easily. Keep the glass far from children.
4. Replacement of lamp in the light box:
   If the LED lamp is damaged, it must be replaced by the manufacturer, or its service agent.

Troubleshooting

Trouble	Cause and Remedy
No refrigeration	Is the plug in the socket well?
	Is the fuse broken?
	Is there no power?
Unsatisfactory refrigeration	Is it under the sunlight? Is there any heat source nearby?
	Is the surrounding ventilation bad?
	Does the door close well? Has the door been open for a long time?
	Is the door seal strip deformed or damaged?
	Is food congested or too much?
	Does food block the air suction outlet?
	Regulate the temperature controller.
Too much noise	The refrigerator is not level.
	The refrigerator touches the wall or other objects.
	There is a loose part in the refrigerator.
Contact Omcan at 1-800-465-0234 for help if simple troubleshooting does not solve the problems.	

The following situations are not problems:

1. The murmur of water is heard when the refrigerator is working. This is normal as the coolant is circulating in the system.

2. During wet season, condensation may be found on the outside of the refrigerator. This is not a problem, this is caused by high humidity. Simply use a cloth to wipe it.

REFERENCE

Item Number	Model Number	Description	Manufacturer Model Number
44629	RS-CN-0120-4	Refrigerated Showcase Countertop 120 L / 4.2 cu. ft. 110V/60/1 cETLus / ETL Sanitation	RTW-120L-4
44630	RS-CN-0160-4	Refrigerated Showcase Countertop 160 L / 5.7 cu. ft. 110V/60/1 cETLus / ETL Sanitation	RTW-160L-4
44631	RS-CN-0202-4	Refrigerated Showcase Countertop 202 L / 7.13 cu. ft. 110V/60/1 cETLus / ETL Sanitation	RTW-202L-4

Parts Breakdown

Model RS-CN-0120-4 *44629*

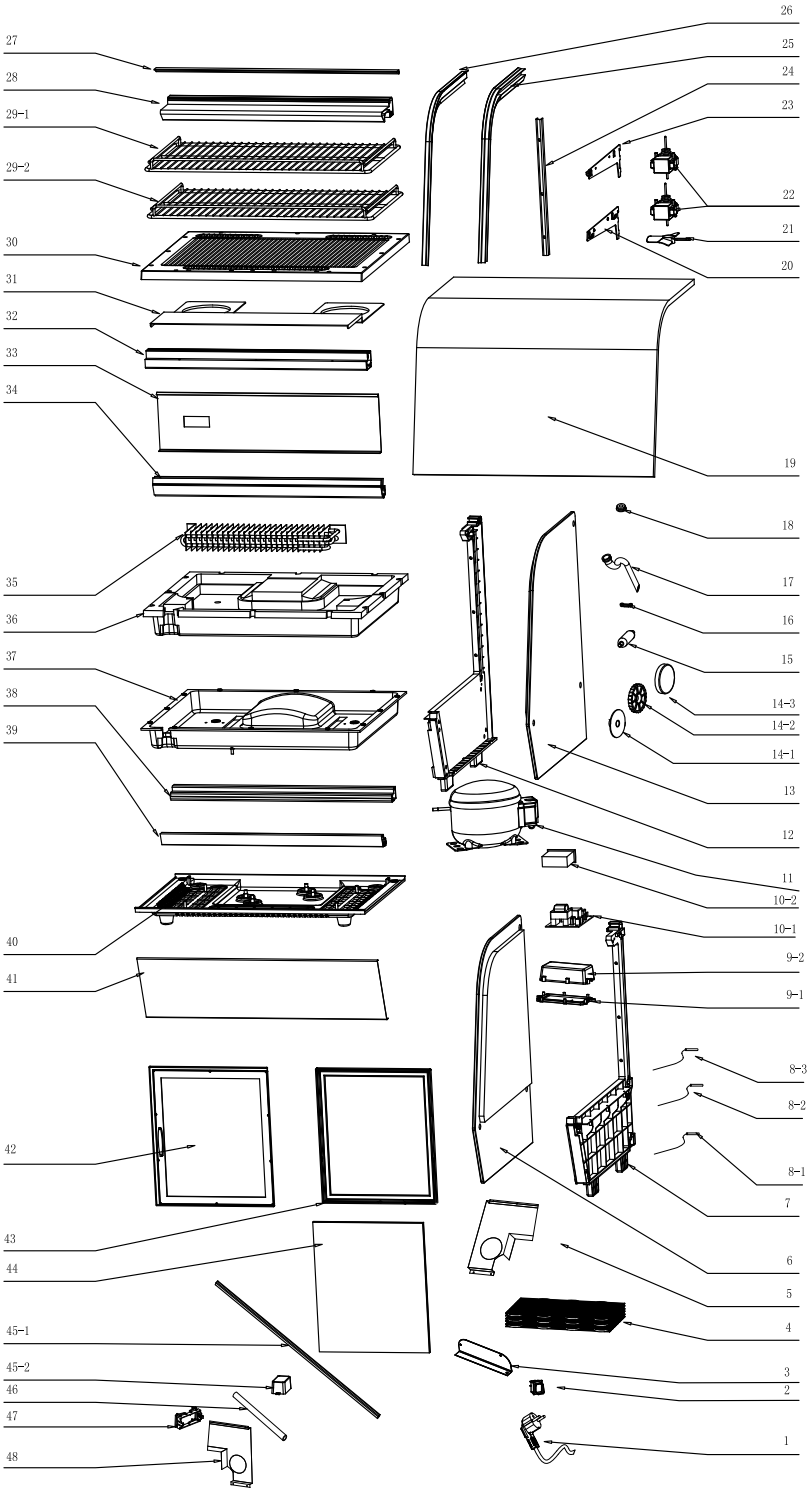

Parts Breakdown

Model RS-CN-0120-4 *44629*

Item No.	Description	Position
AA045	Power Cord for RTW-120L-4	1
70105	Switch for RTW-120L-4	2
68510	Fixed Board of PCB Box for RTW-120L-4	3
AA046	Condenser for RTW-120L-4	4
AA047	Left Condensator Cushion for RTW-120L-4	5
AA048	Left Glass for RTW-120L-4	6
68506	Left Panel for RTW-120L-4	7
68332	Temperature Probe for RTW-120L-4	8-1
AA049	Defrost Probe for RTW-120L-4	8-2
60581	Overheating Probe for RTW-120L-4	8-3
AA050	Control Box for RTW-120L-4	9-1
AA051	Control Box Cover for RTW-120L-4	9-2
AA052	Main Circuit Board for RTW-120L-4	10-1
AA053	Digital Controller for RTW-120L-4	10-2
60534	Compressor for RTW-120L-4	11
68503	Right Panel for RTW-120L-4	12
AA054	Right Glass for RTW-120L-4	13
79314	Decoration Nut Gasket for RTW-120L-4	14-1
79313	Nut Gasket for RTW-120L-4	14-2

Item No.	Description	Position
79312	Nut Decoration for RTW-120L-4	14-3
30624	Dry Filter for RTW-120L-4	15
30617	Wire Clip for RTW-120L-4	16
68306	Water Pipe for RTW-120L-4	17
30613	Motor Fixer Ring for RTW-120L-4	18
68501	Curved Front Glass for RTW-120L-4	19
67313	Left Shelf Bracket for RTW-120L-4	20
68528	Fan Blade for RTW-120L-4	21
AA055	Motor Fan for RTW-120L-4	22
67314	Right Shelf Bracket for RTW-120L-4	23
68498	Pillar for Bracket for RTW-120L-4	24
68496	Left Seal for RTW-120L-4	25
68497	Right Seal for RTW-120L-4	26
68495	Decorative Board for RTW-120L-4	27
68494	Top Panel for RTW-120L-4	28
68493	Shelf 1 for RTW-120L-4	29-1
68492	Shelf 2 for RTW-120L-4	29-2
68491	Vent Tray for RTW-120L-4	30
68490	Evaporator Protect Board for RTW-120L-4	31

Item No.	Description	Position
68489	Rear Middle Pillar for RTW-120L-4	32
AA056	Rear Base Panel for RTW-120L-4	33
68487	Front Middle Pillar for RTW-120L-4	34
68486	Evaporator for RTW-120L-4	35
AA057	Foam Base of Evaporator for RTW-120L-4	36
68484	Plastic Base for Foam for RTW-120L-4	37
68483	Rear Bottom Pillar for RTW-120L-4	38
68482	Front Bottom Pillar for RTW-120L-4	39
AA058	Bottom Base of Compressor for RTW-120L-4	40
AA059	Front Frame for RTW-120L-4	41
68479	Inner Door Frame for RTW-120L-4	42
68478	Outer Door Frame for RTW-120L-4	43
68477	Door Glass for RTW-120L-4	44
AA060	LED Light for RTW-120L-4	45-1
68356	LED Power Drive for RTW-120L-4	45-2
68860	Accumulator for RTW-120L-4	46
60125	Control Bracket for RTW-120L-4	47
AA061	Right Condenser Cushion for RTW-120L-4	48

Parts Breakdown

Model RS-CN-0160-4 *44630*

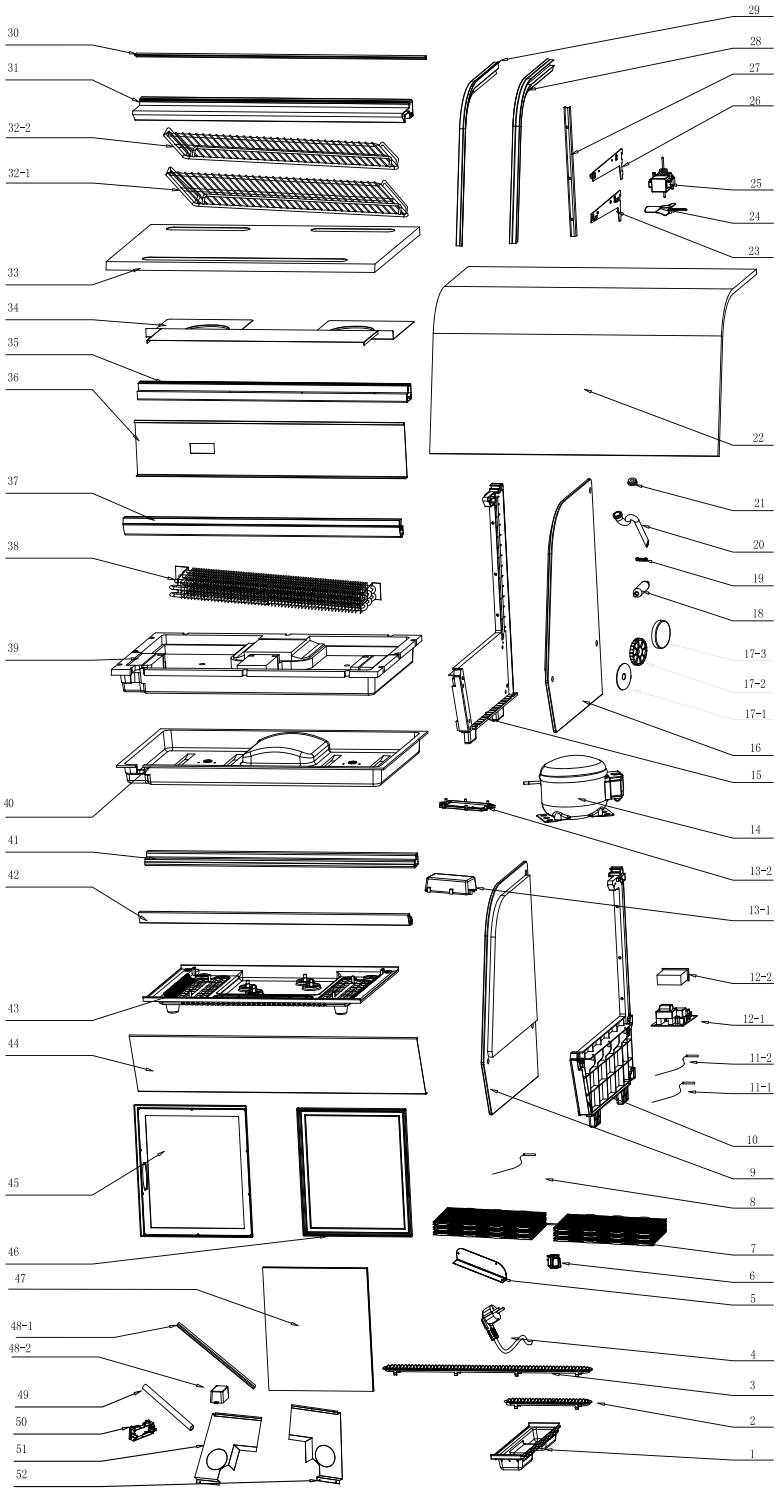

Parts Breakdown

Model RS-CN-0160-4 *44630*

Item No.	Description	Position
68534	Water Tray for RTW-160L-4	1
68533	Cover for Air Outlet for RTW-160L-4	2
68532	Cover for Air Suction for RTW-160L-4	3
AA062	Power Cord for RTW-160L-4	4
68510	Fixed Board of PCB Box for RTW-160L-4	5
70105	Switch for RTW-160L-4	6
AA063	Condensator for RTW-160L-4	7
60581	Overheating Probe for RTW-160L-4	8
AA048	Left Glass for RTW-160L-4	9
68506	Left Panel for RTW-160L-4	10
68332	Temperature Probe for RTW-160L-4	11-1
60666	Defrost Probe for RTW-160L-4	11-2
AA052	Main Circuit Board for RTW-160L-4	12-1
AA053	Digital Controller for RTW-160L-4	12-2
AA050	Control Box for RTW-160L-4	13-1
AA051	Control Box Cover for RTW-160L-4	13-2
60534	Compressor for RTW-160L-4	14
68503	Right Panel for RTW-160L-4	15
AA054	Right Glass for RTW-160L-4	16
79314	Decoration Nut Gasket for RTW-160L-4	17-1

Item No.	Description	Position
79313	Nut Gasket for RTW-160L-4	17-2
79312	Nut Decoration for RTW-160L-4	17-3
30624	Dry Filter for RTW-160L-4	18
30617	Wire Clip for RTW-160L-4	19
68306	Water Pipe for RTW-160L-4	20
30613	Motor Fixer Ring for RTW-160L-4	21
68529	Curved Front Glass for RTW-160L-4	22
67313	Left Shelf Bracket for RTW-160L-4	23
68528	Fan Blade for RTW-160L-4	24
AA055	Motor Fan for RTW-160L-4	25
67314	Right Shelf Bracket for RTW-160L-4	26
68498	Pillar for Bracket for RTW-160L-4	27
68497	Right Seal for RTW-160L-4	28
68496	Left Seal for RTW-160L-4	29
68527	Decorative Board for RTW-160L-4	30
68526	Top Panel for RTW-160L-4	31
71684	Shelf 1 for RTW-160L-4	32-1
71683	Shelf 2 for RTW-160L-4	32-2
68525	Vent Tray for RTW-160L-4	33
68524	Evaporator Protect Board for RTW-160L-4	34

Item No.	Description	Position
68523	Rear Middle Pillar for RTW-160L-4	35
AA064	Rear Base Panel for RTW-160L-4	36
68521	Front Middle Pillar for RTW-160L-4	37
68520	Evaporator for RTW-160L-4	38
68519	Foam Base of Evaporator for RTW-160L-4	39
68518	Plastic Base for Pillar for RTW-160L-4	40
68517	Rear Bottom Pillar for RTW-160L-4	41
68516	Front Bottom Pillar for RTW-160L-4	42
AA058	Bottom Base of Compressor for RTW-160L-4	43
AA065	Front Frame for RTW-160L-4	44
68514	Inner Door Frame for RTW-160L-4	45
68513	Outer Door Frame for RTW-160L-4	46
68512	Door Glass for RTW-160L-4	47
AA066	LED Light for RTW-160L-4	48-1
68356	LED Power Drive for RTW-160L-4	48-2
68860	Accumulator for RTW-160L-4	49
60125	Control Bracket for RTW-160L-4	50
AA067	Left Condenser Cushion for RTW-160L-4	51
AA061	Right Condenser Cushion for RTW-160L-4	52

Parts Breakdown

Model RS-CN-0202-4 *44631*

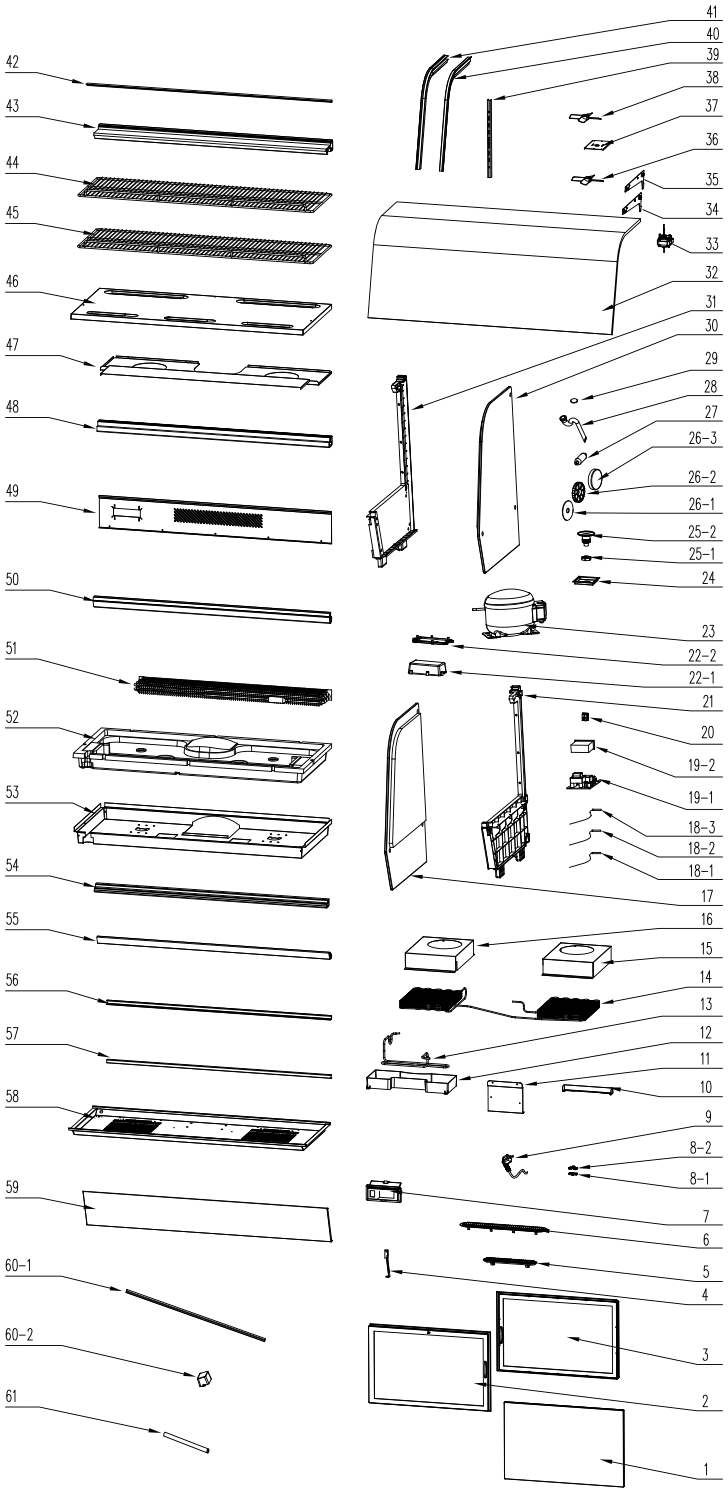

Parts Breakdown

Model RS-CN-0202-4 *44631*

Item No.	Description	Position
AA068	Door Glass for RTW-202L-4	1
AA069	Inner Door Frame for RTW-202L-4	2
AA070	Outer Door Frame for RTW-202L-4	3
AA071	Front Middle Support for RTW-202L-4	4
68533	Cover for Air Outlet for RTW-202L-4	5
AA072	Cover for Air Suction for RTW-202L-4	6
68298	Switch Panel Assembly for RTW-202L-4	7
60117	Wire Clip Holder for RTW-202L-4	8-1
60116	Wire Clip Cover for RTW-202L-4	8-2
AA062	Power Cord for RTW-202L-4	9
AA073	Condenser Limiting Plate for RTW-202L-4	10
AA074	Fixed Board of PCB Box for RTW-202L-4	11
60948	Water Receiver for RTW-202L-4	12
AA075	Tray of Heater for RTW-202L-4	13
AA076	Condensator for RTW-202L-4	14
AA077	Right Condensator Cushion for RTW-202L-4	15
AA078	Left Condensator Cushion for RTW-202L-4	16
AA048	Left Glass for RTW-202L-4	17
AA079	Temperature Probe for RTW-202L-4	18-1
AA080	Defrost Probe for RTW-202L-4	18-2
AA081	Overheating Probe for RTW-202L-4	18-3
AA052	Main Circuit Board for RTW-202L-4	19-1
AA082	Digital Controller for RTW-202L-4	19-2
70105	Switch for RTW-202L-4	20

Item No.	Description	Position
68506	Left Panel for RTW-202L-4	21
AA050	Control Box for RTW-202L-4	22-1
AA051	Control Box Cover for RTW-202L-4	22-2
60534	Compressor for RTW-202L-4	23
AA083	Backing Plate for RTW-202L-4	24
71518	Nut for RTW-202L-4	25-1
AA084	Drainage Pipe Joint for RTW-202L-4	25-2
79314	Decoration Nut Gasket for RTW-202L-4	26-1
79313	Nut Gasket for RTW-202L-4	26-2
79312	Nut Decoration for RTW-202L-4	26-3
30624	Dry Filter for RTW-202L-4	27
68306	Water Pipe for RTW-202L-4	28
68368	Wire Clip for RTW-202L-4	29
AA054	Right Glass for RTW-202L-4	30
68503	Right Panel for RTW-202L-4	31
AA085	Curved Front Glass for RTW-202L-4	32
AA086	Motor Fan for RTW-202L-4	33
67313	Left Shelf Bracket for RTW-202L-4	34
67314	Right Shelf Bracket for RTW-202L-4	35
AA087	Fan Blade for RTW-202L-4	36
79662	Fan Motor Stand for RTW-202L-4	37
AA088	Fan Blade for RTW-202L-4	38
68498	Pillar for Bracket for RTW-202L-4	39
68496	Left Seal for RTW-202L-4	40

Item No.	Description	Position
68497	Right Seal for RTW-202L-4	41
AA089	Decorative Board for RTW-202L-4	42
AA090	Top Panel for RTW-202L-4	43
AA091	Shelf 1 for RTW-202L-4	44
AA092	Shelf 2 for RTW-202L-4	45
AA093	Vent Tray for RTW-202L-4	46
AA094	Evaporator Protect Board for RTW-202L-4	47
AA095	Rear Middle Pillar for RTW-202L-4	48
AA096	Rear Base Panel for RTW-202L-4	49
AA097	Front Middle Pillar for RTW-202L-4	50
AA098	Evaporator for RTW-202L-4	51
AA099	Foam Base of Evaporator for RTW-202L-4	52
AA100	Plastic Base for Pillar for RTW-202L-4	53
AA101	Rear Bottom Pillar for RTW-202L-4	54
AA102	Front Bottom Pillar for RTW-202L-4	55
AA103	Rear Bottom Pillar Lining for RTW-202L-4	56
AA104	Front Bottom Pillar Lining for RTW-202L-4	57
AA105	Bottom Base of Compressor for RTW-202L-4	58
AA106	Front Frame for RTW-202L-4	59
AA107	LED Light for RTW-202L-4	60-1
68356	LED Power Drive for RTW-202L-4	60-2
68860	Accumulator for RTW-202L-4	61

Electrical Schematics

Model RS-CN-0120-4 *44629*
Model RS-CN-0160-4 *44630*
Model RS-CN-0202-4 *44631*

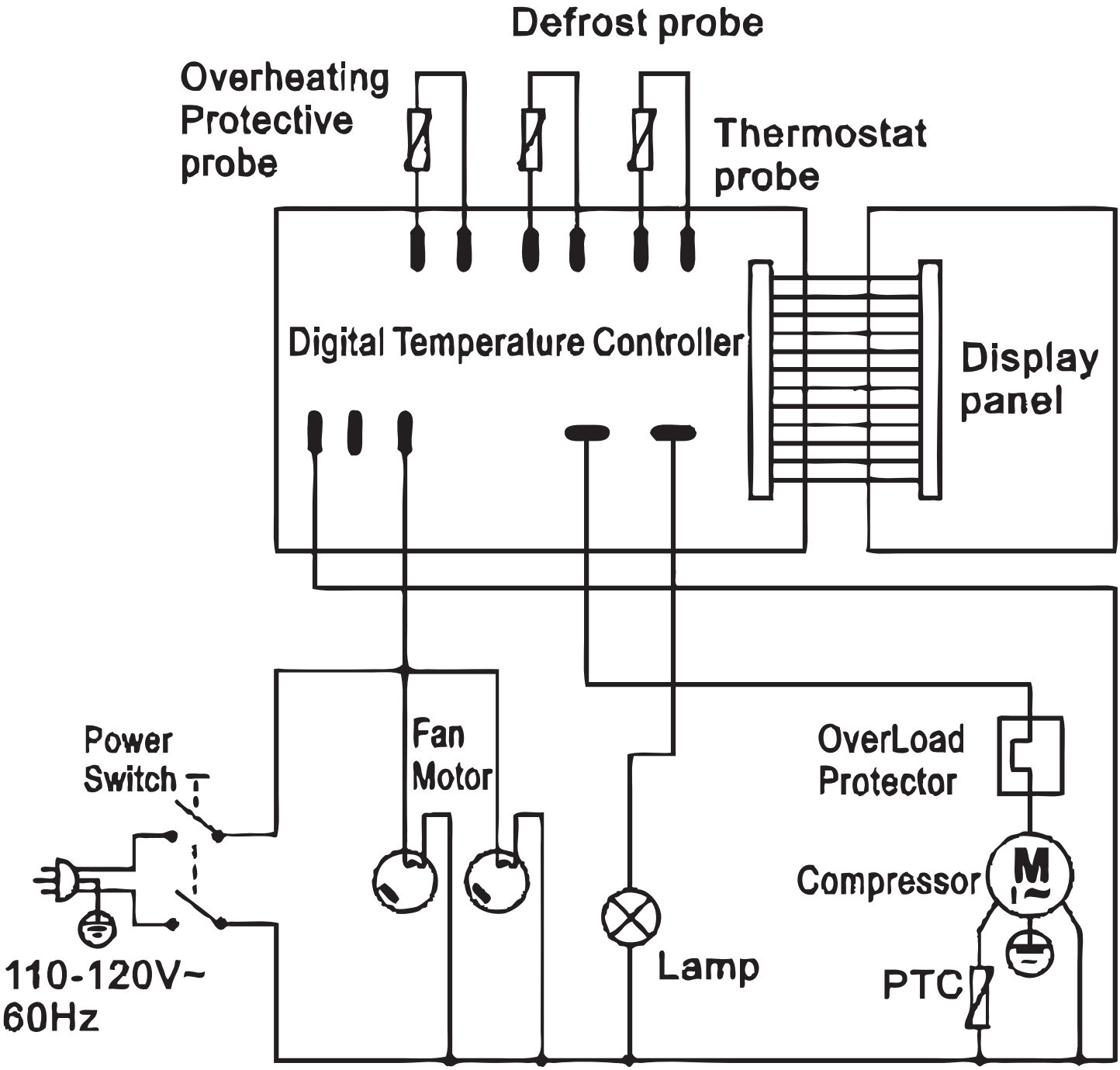

Notes

Notes

Warranty Registration

Thank you for purchasing an Omcan product. To register your warranty for this product, complete the information below, tear off the card at the perforation and then send to the address specified below. You can also register online by visiting:

Merci d'avoir acheté un produit Omcan. Pour enregistrer votre garantie pour ce produit, complétez les informations ci-dessous, détachez la carte au niveau de la perforation, puis l'envoyer à l'adresse spécifié ci-dessous. Vous pouvez également vous inscrire en ligne en visitant:

Gracias por comprar un producto Omcan usted. Para registrar su garantía para este producto, complete la información a continuación, cortar la tarjeta en la perforación y luego enviarlo a la dirección indicada a continuación. También puede registrarse en línea en:

https://omcan.com/warranty-registration/

For mailing in Canada

Pour postale au Canada

Por correo en Canadá

OMCAN
PRODUCT WARRANTY REGISTRATION
3115 Pepper Mill Court,
Mississauga, Ontario
Canada, L5L 4X5

For mailing in the US

Pour diffusion aux États-Unis

Por correo en los EE.UU.

OMCAN
PRODUCT WARRANTY REGISTRATION
4450 Witmer Industrial Estates, Unit 4,
Niagara Falls, New York
USA, 14305

or email to: service@omcan.com

Purchaser's Information

Name: _____

Address: _____

City: _____ Province or State: _____ Postal or Zip: _____

Country: _____

Dealer from which Purchased: _____

Dealer City: _____ Dealer Province or State: _____

Invoice: _____

Company Name: _____

Telephone: _____

Email Address: _____

Type of Company:

☐ Restaurant ☐ Bakery ☐ Deli

☐ Butcher ☐ Supermarket ☐ Caterer

☐ Institution *(specify)*: _____

☐ Other *(specify)*: _____

Model Name: _____ Model Number: _____ Serial Number: _____

Machine Description: _____

Date of Purchase (MM/DD/YYYY): _____ Date of Installation (MM/DD/YYYY): _____

Would you like to extend the warranty? ☐ Yes ☐ No

Thank you for choosing Omcan | Merci d'avoir choisi Omcan | Gracias por elegir Omcan

Since 1951 Omcan has grown to become a leading distributor of equipment and supplies to the North American food service industry. Our success over these many years can be attributed to our commitment to strengthen and develop new and existing relationships with our valued customers and manufacturers. Today with partners in North America, Europe, Asia and South America, we continually work to improve and grow the company. We strive to offer customers exceptional value through our qualified local sales and service representatives who provide convenient access to over 5,000 globally sourced products.

Depuis 1951 Omcan a grandi pour devenir un des “leaders” de la distribution des équipements et matériel pour l’industrie des services alimentaires en Amérique du Nord. Notre succès au cours de ces nombreuses années peut être attribué à notre engagement à renforcer et à développer de nouvelles et existantes relations avec nos clients et les fabricants de valeur. Aujourd’hui avec des partenaires en Amérique du Nord, Europe, Asie et Amérique du Sud, nous travaillons continuellement à améliorer et développer l’entreprise. Nous nous efforçons d’offrir à nos clients une valeur exceptionnelle grâce à nos ventes locales qualifiées et des représentants de service qui offrent un accès facile à plus de 5000 produits provenant du monde entier.

Desde 1951 Omcan ha crecido hasta convertirse en un líder en la distribución de equipos y suministros de alimentos en América del Norte industria de servicios. Nuestro éxito en estos años se puede atribuir a nuestro compromiso de fortalecer y desarrollar nuevas relaciones existentes con nuestros valiosos clientes y fabricantes. Hoy con socios de América del Norte, Europa, Asia y América del Sur, que trabajan continuamente para mejorar y crecer la empresa. Nos esforzamos por ofrecer a nuestros clientes valor excepcional a través de nuestro local de ventas y representantes de los servicios que proporcionan un fácil acceso a más de 5,000 productos con origen a nivel mundial.