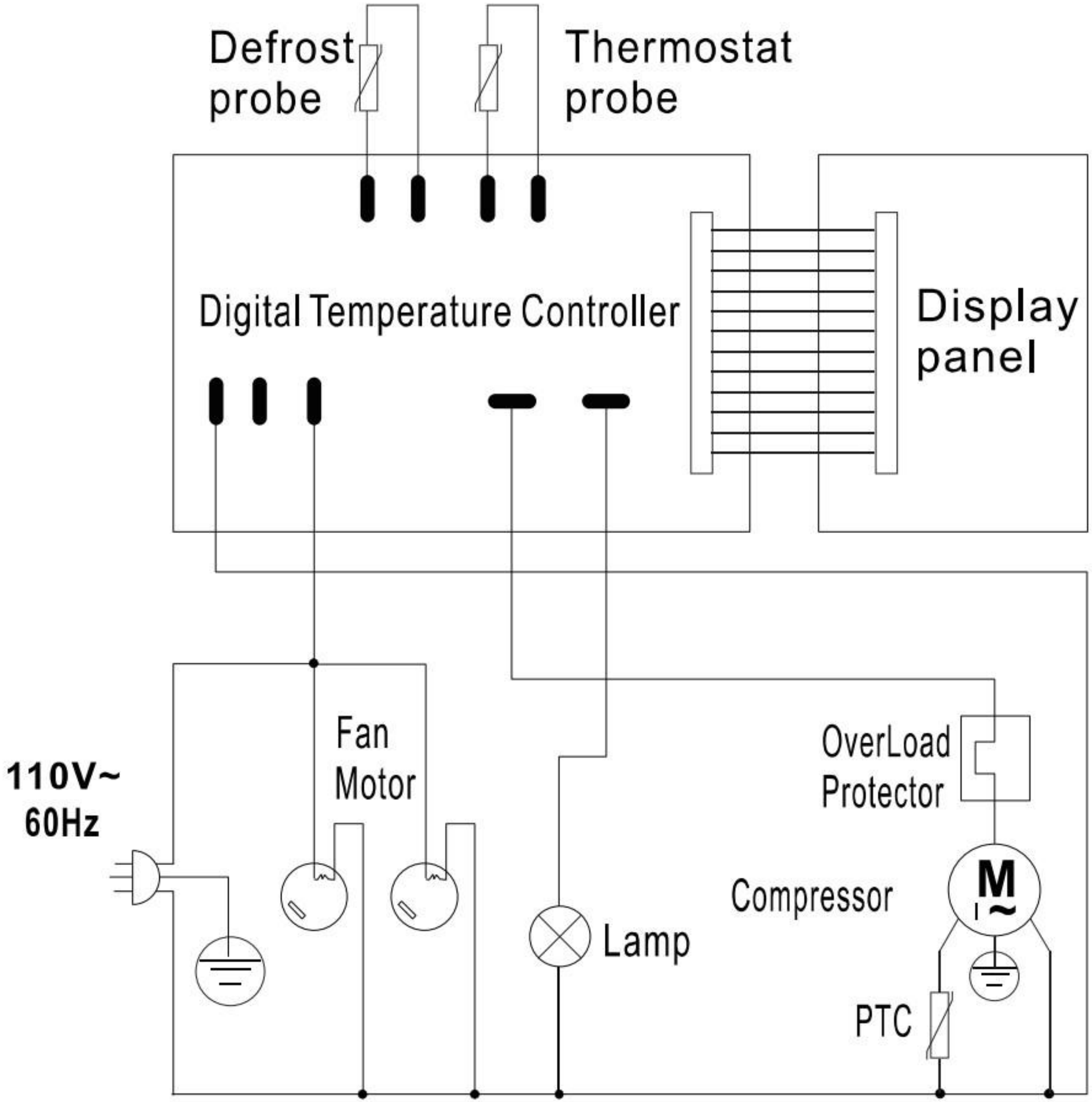
Defrost
probe
Thermostat
probe
Digital Temperature Controller
Display
panel
110V~
60Hz
Fan
Motor
Lamp
OverLoad
Protector
Compressor
M
PTC