Parts Breakdown

Model PT-CN-1778-S-HC *50090*

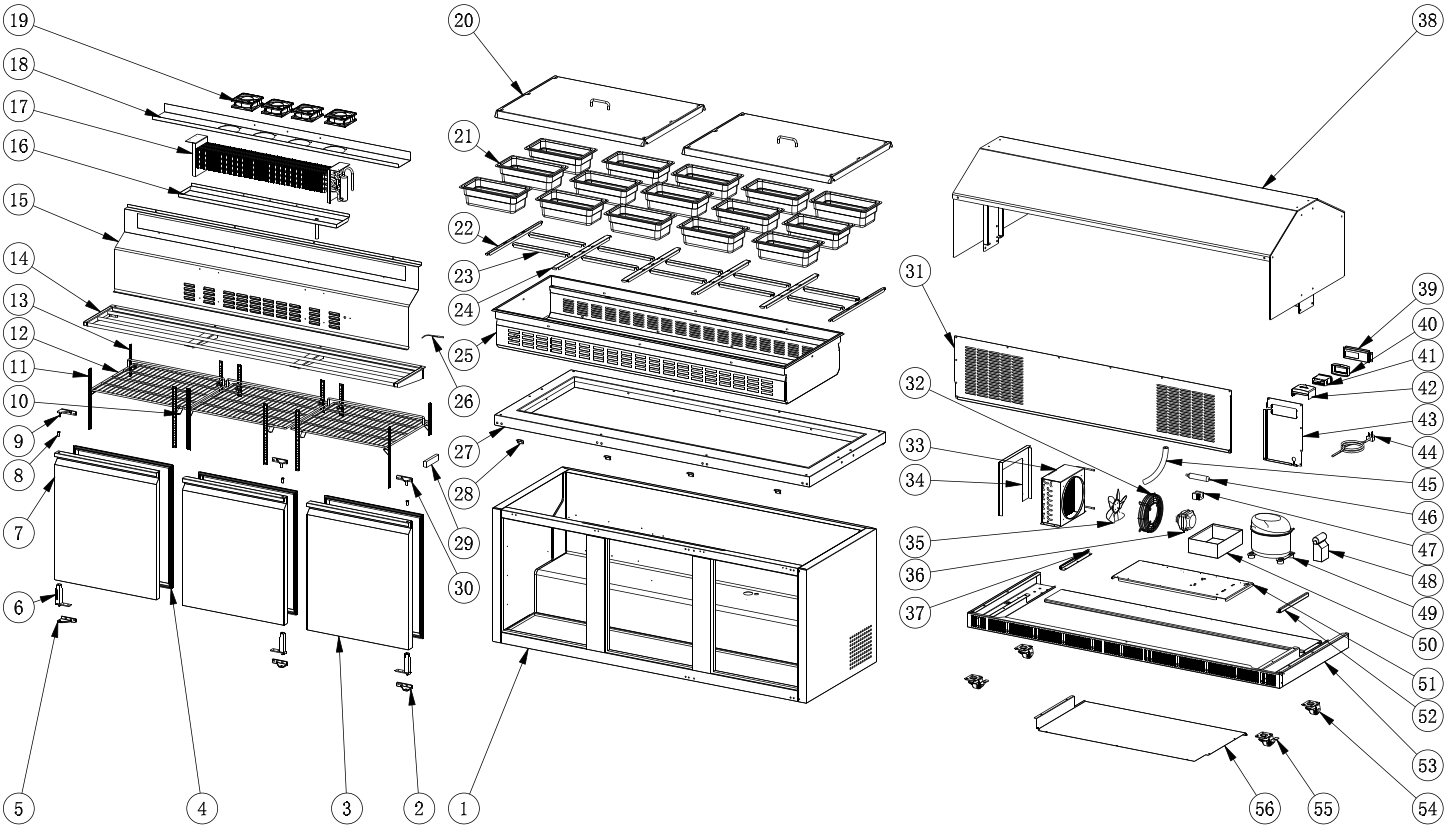

Parts Breakdown

Model PT-CN-1778-S-HC *50090*

Item No.	Description	Position
AI978	Cabinet for 50090	1
AA360	Bottom Left Hinge for 50090	2
AI979	Right Door for 50090	3
AB197	Gasket for 50090	4
AA359	Bottom Right Hinge for 50090	5
AI945	Spring Hinge Board for 50090	6
AI980	Left Door for 50090	7
AA388	Axis Cover for 50090	8
AB200	Upper Left Hinge for 50090	9
26884	K Clip for 50090	10
AF090	K Strip-3 Holes for 50090	11
AB460	Shelf for 50090	12
AF089	K Strip-2 Holes for 50090	13
AI981	Sliding Tray for 50090	14
AI982	Evaporator Cover for 50090	15
AI983	Inner Drain Pan for 50090	16
AA171	Evaporator for 50090	17
AI984	Fan Motor Installation Panel for 50090	18
AA128	Condenser Fan Motor for 50090	19

Item No.	Description	Position
AI985	Lid for 50090	20
AI952	Pan for 50090	21
AI953	Pan Bracket-542-15 for 50090	22
AI954	Pan Bracket-330-28 for 50090	23
AI955	Pan Bracket-542-28 for 50090	24
AI986	Tray Components for 50090	25
AA379	Temperature Probe for 50090	26
AI987	Top Board for 50090	27
AI958	Top Board Connector for 50090	28
AA596	Thermometer for 50090	29
AF070	Upper Right Hinge for 50090	30
AI988	Back Grill for 50090	31
AI960	Condenser Fan Cover for 50090	32
AI961	Condenser Fan Motor for 50090	33
AI962	Condenser Fan Screen for 50090	34
AA962	Blade of Evaporator Fan Motor for 50090	35
AI963	Condenser Fan Motor for 50090	36
AI964	Left Compressor Unit Track for 50090	37
AI989	Sneeze Guard for 50090	38

Item No.	Description	Position
AB320	Thermostat Installation Board for 50090	39
AA214	Thermostat Water Proof Cover for 50090	40
AA123	Thermostat for 50090	41
AI966	Thermostat Back Cover for 50090	42
AI967	Thermostat Installation Board for 50090	43
AA135	Power Cord for 50090	44
AA133	Drain Hose for 50090	45
AI968	Filter for 50090	46
AI969	Filter Fixer for 50090	47
AI990	Compressor Parts for 50090	48
AI991	Compressor for 50090	49
AA874	Outer Drain Pan for 50090	50
AI972	Compressor Unit Installation Board for 50090	51
AI973	Right Compressor Unit Track for 50090	52
AI992	Base Components for 50090	53
AI975	2" Castor for 50090	54
AI976	2" Castor with Brake for 50090	55
AI977	Base Wind Board for 50090	56