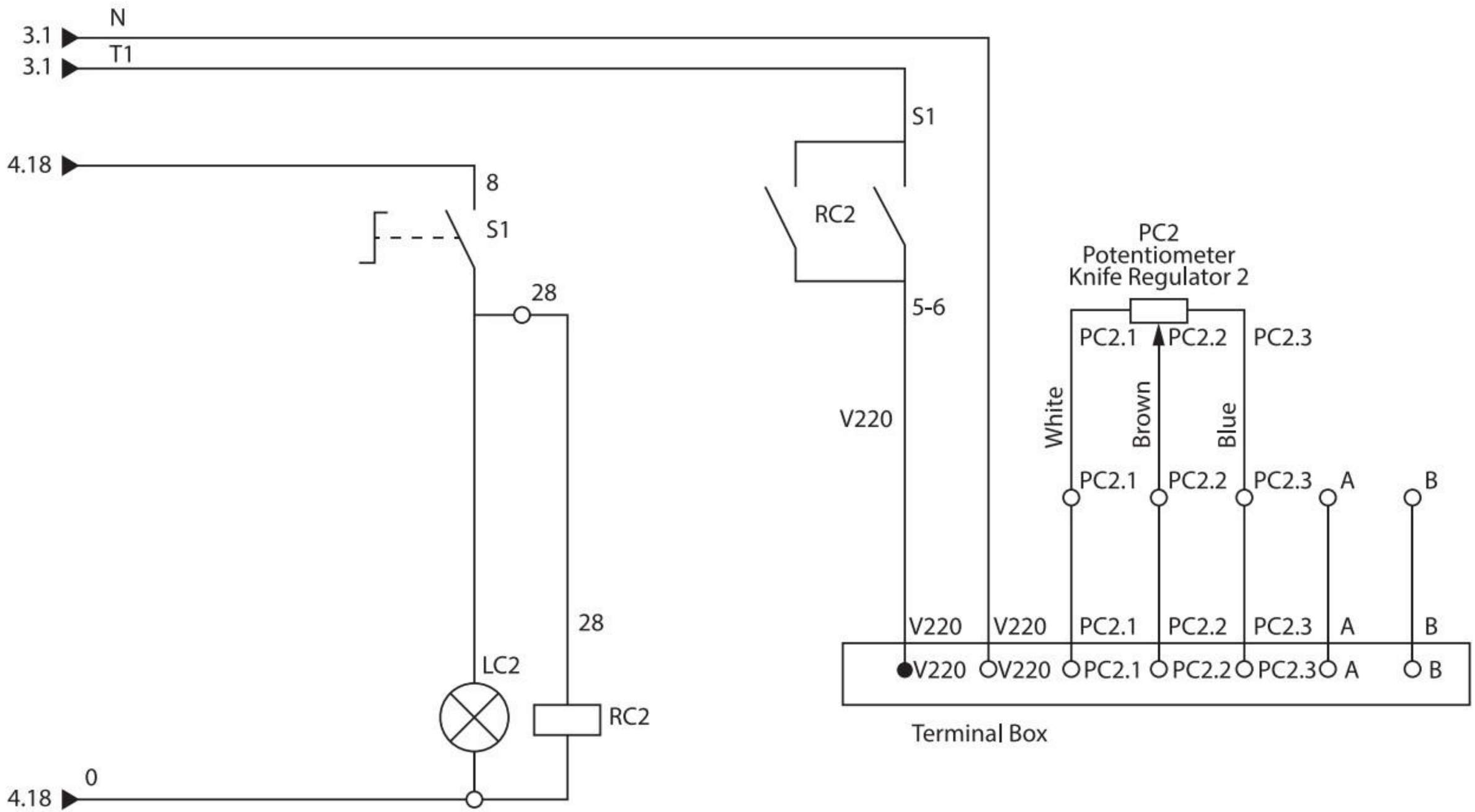
3.1
N
3.1
T1
4.18
8
S1
28
S1
RC2
5-6
V220
28
LC2
RC2
4.18
0
PC2
Potentiometer
Knife Regulator 2
PC2.1
PC2.2
PC2.3
White
Brown
Blue
PC2.1
PC2.2
PC2.3
A
B
V220
V220
PC2.1
PC2.2
PC2.3
A
B
V220
V220
PC2.1
PC2.2
PC2.3
A
B
Terminal Box

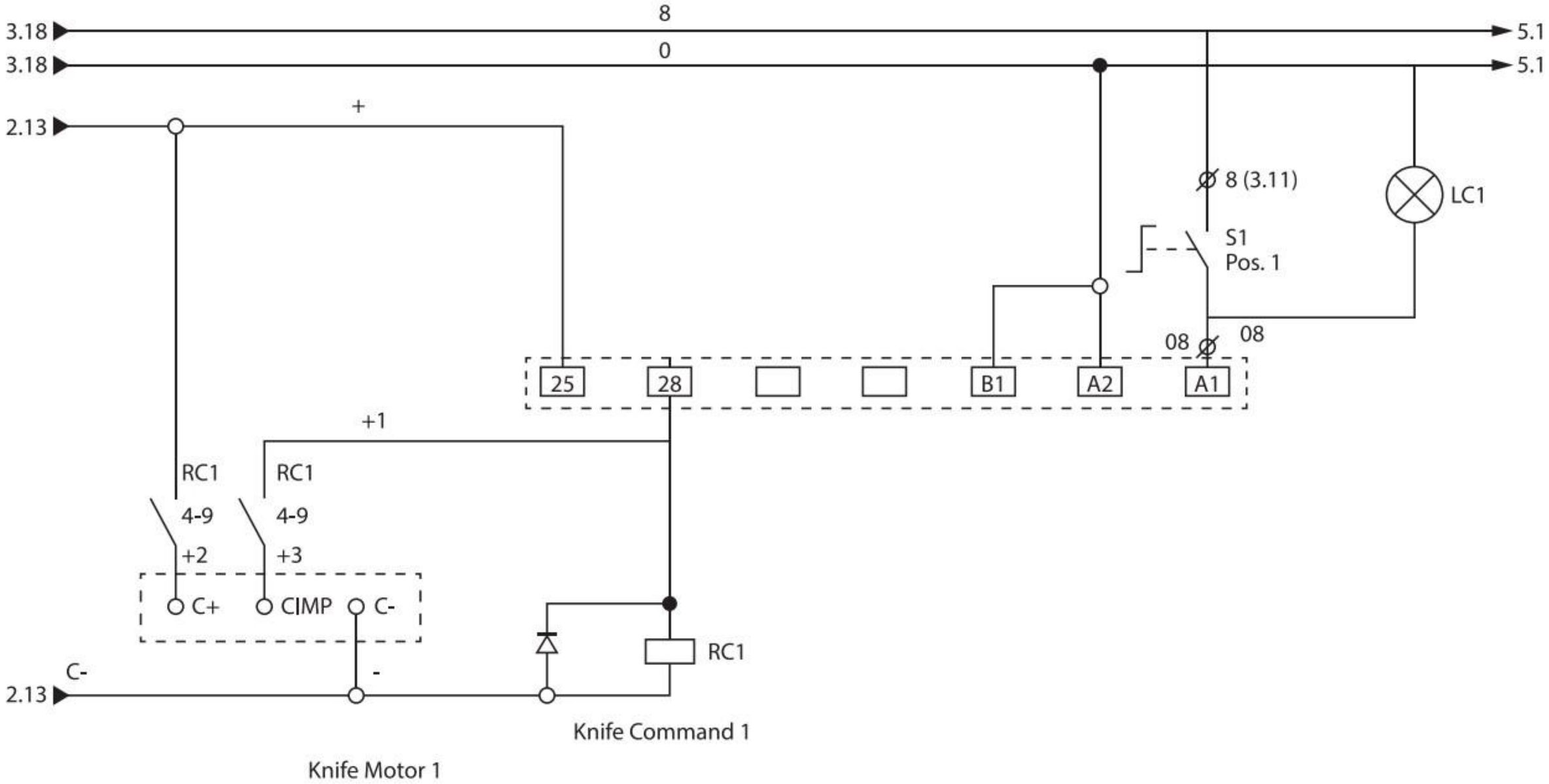
3.18
8
5.1
3.18
0
5.1
2.13
+
8 (3.11)
LC1
S1
Pos. 1
08
08
25
28
B1
A2
A1
+1
RC1
RC1
4-9
4-9
+2
+3
C+
CIMP
C-
RC1
C-
-
2.13
Knife Command 1
Knife Motor 1

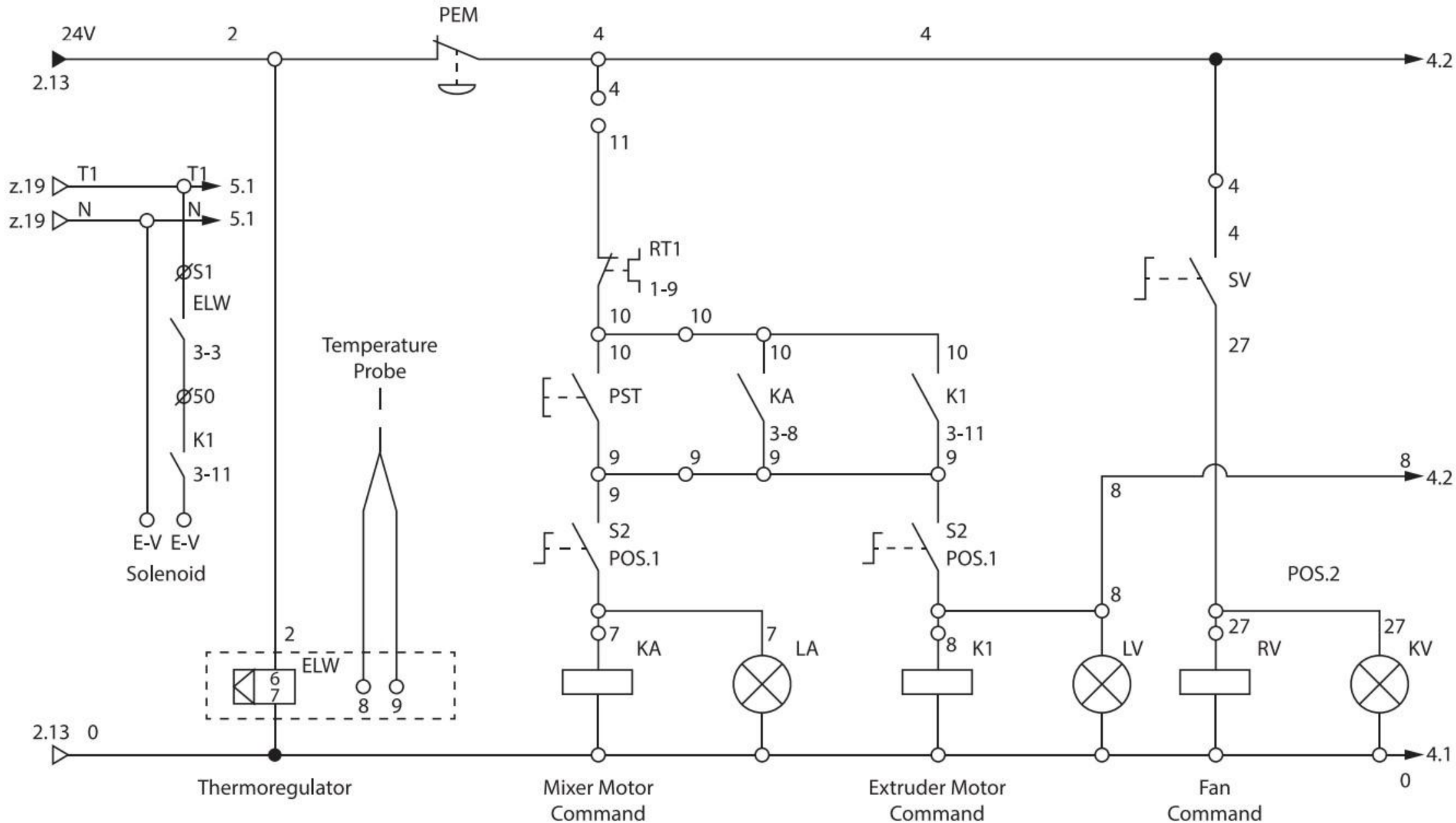
24V
2
PEM
4
4
4.2
2.13
4
11
z.19
T1
T1
5.1
z.19
N
N
5.1
ØS1
ELW
3-3
Ø50
K1
3-11
E-V E-V
Solenoid
Temperature
Probe
RT1
1-9
10
10
10
10
10
PST
KA
K1
3-8
3-11
9
9
9
9
9
S2
POS.1
S2
POS.1
4
4
SV
27
8
4.2
8
8
POS.2
2
ELW
6
7
8
9
7
KA
7
LA
8
K1
LV
27
RV
27
KV
2.13
0
4.1
0
Thermoregulator
Mixer Motor
Command
Extruder Motor
Command
Fan
Command

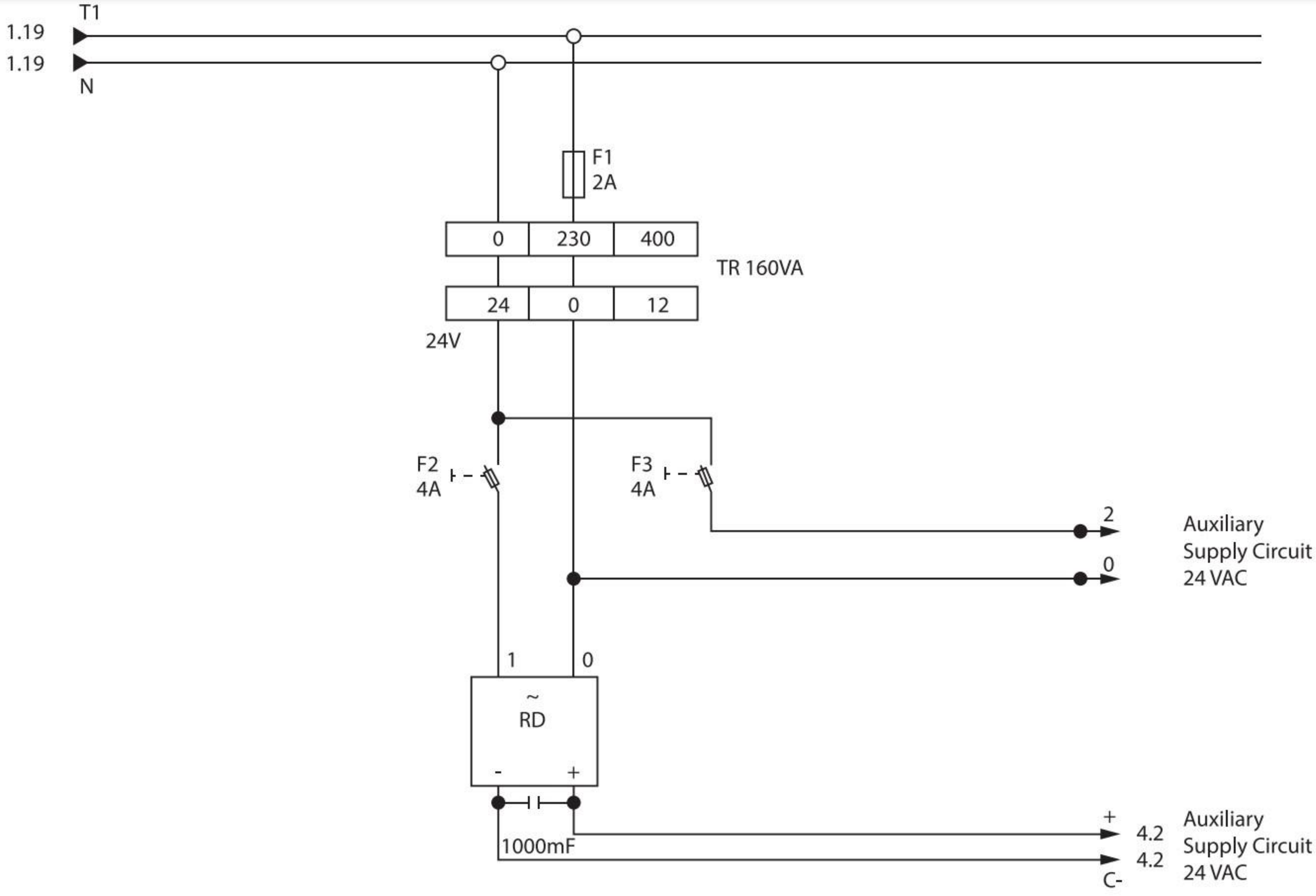
T1
1.19
1.19
N
F1
2A
0
230
400
TR 160VA
24
0
12
24V
F2
4A
F3
4A
2
0
Auxiliary
Supply Circuit
24 VAC
1
0
~
RD
-
+
1000mF
+
4.2
4.2
C-
Auxiliary
Supply Circuit
24 VAC

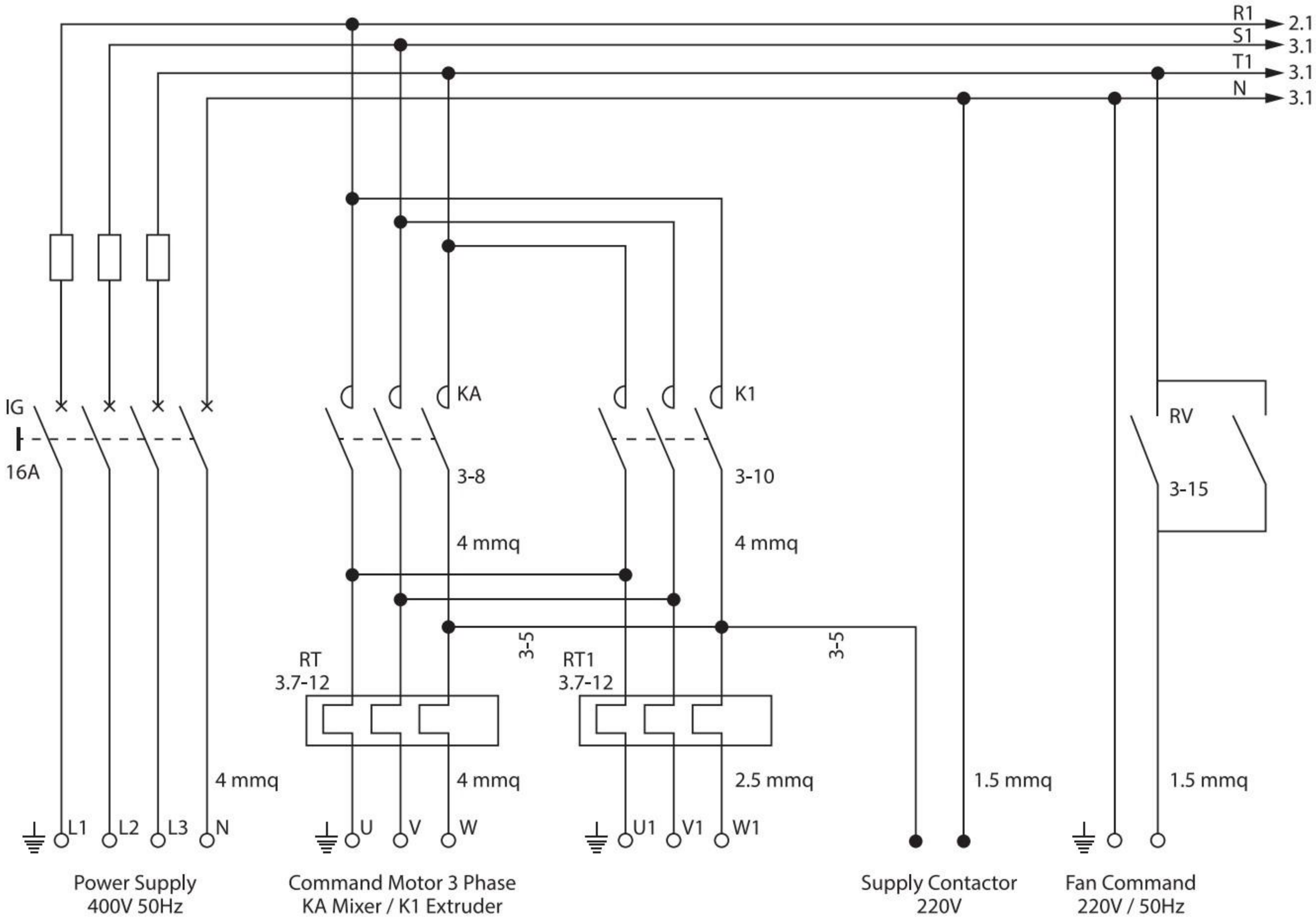
R1
S1
T1
N
2.1
3.1
3.1
3.1
IG
16A
KA
K1
RV
3-8
3-10
3-15
4 mmq
4 mmq
3-5
3-5
RT
3.7-12
RT1
3.7-12
4 mmq
4 mmq
2.5 mmq
1.5 mmq
1.5 mmq
L1
L2
L3
N
U
V
W
U1
V1
W1
Power Supply
400V 50Hz
Command Motor 3 Phase
KA Mixer / K1 Extruder
Supply Contactor
220V
Fan Command
220V / 50Hz