ELECTRICAL SCHEMATIC

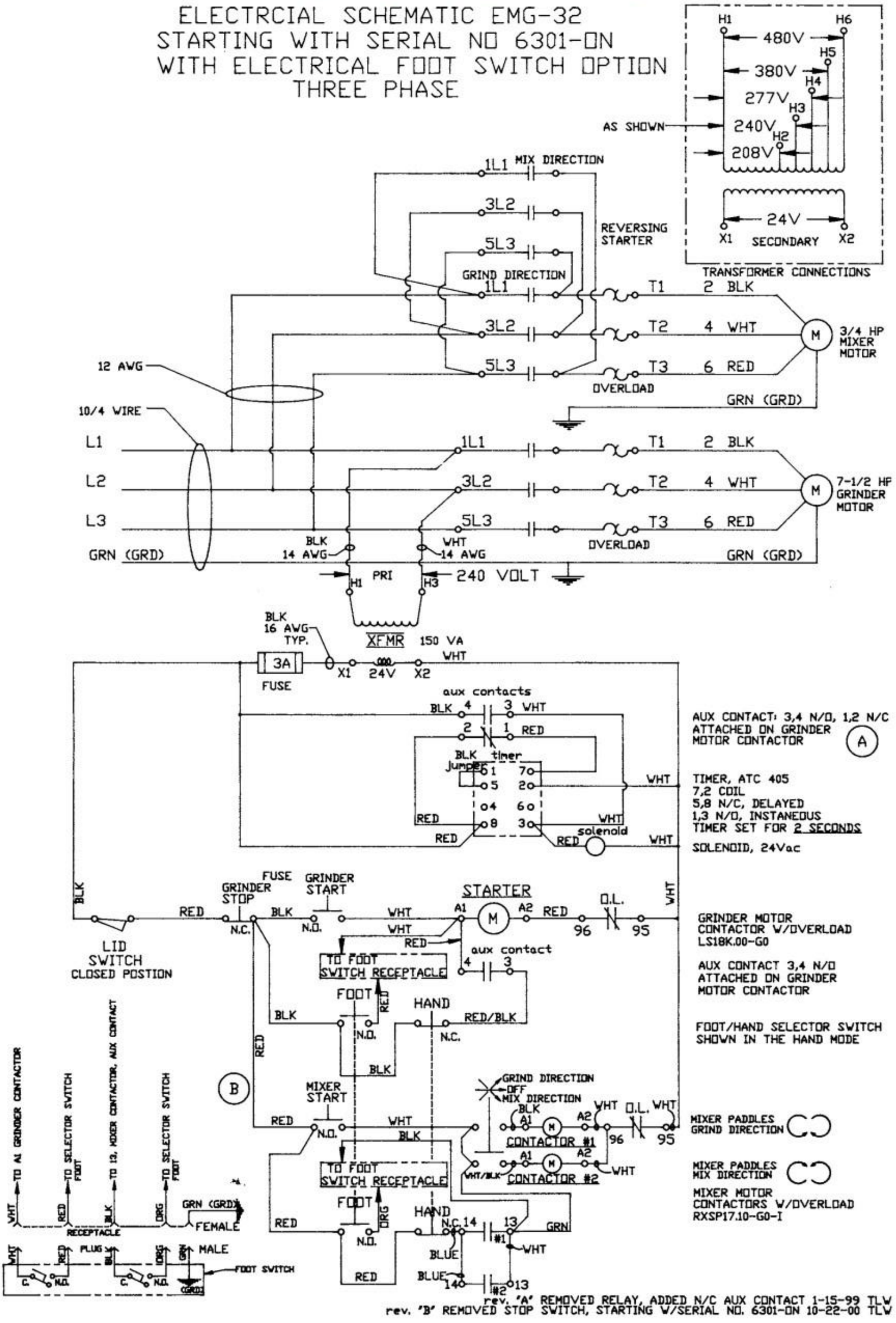

ELECTRICAL SCHEMATIC EMG-32
WITH SERIAL NO. 6075-6300
WITH ELECTRICAL FOOT SWITCH OPTION
THREE PHASE

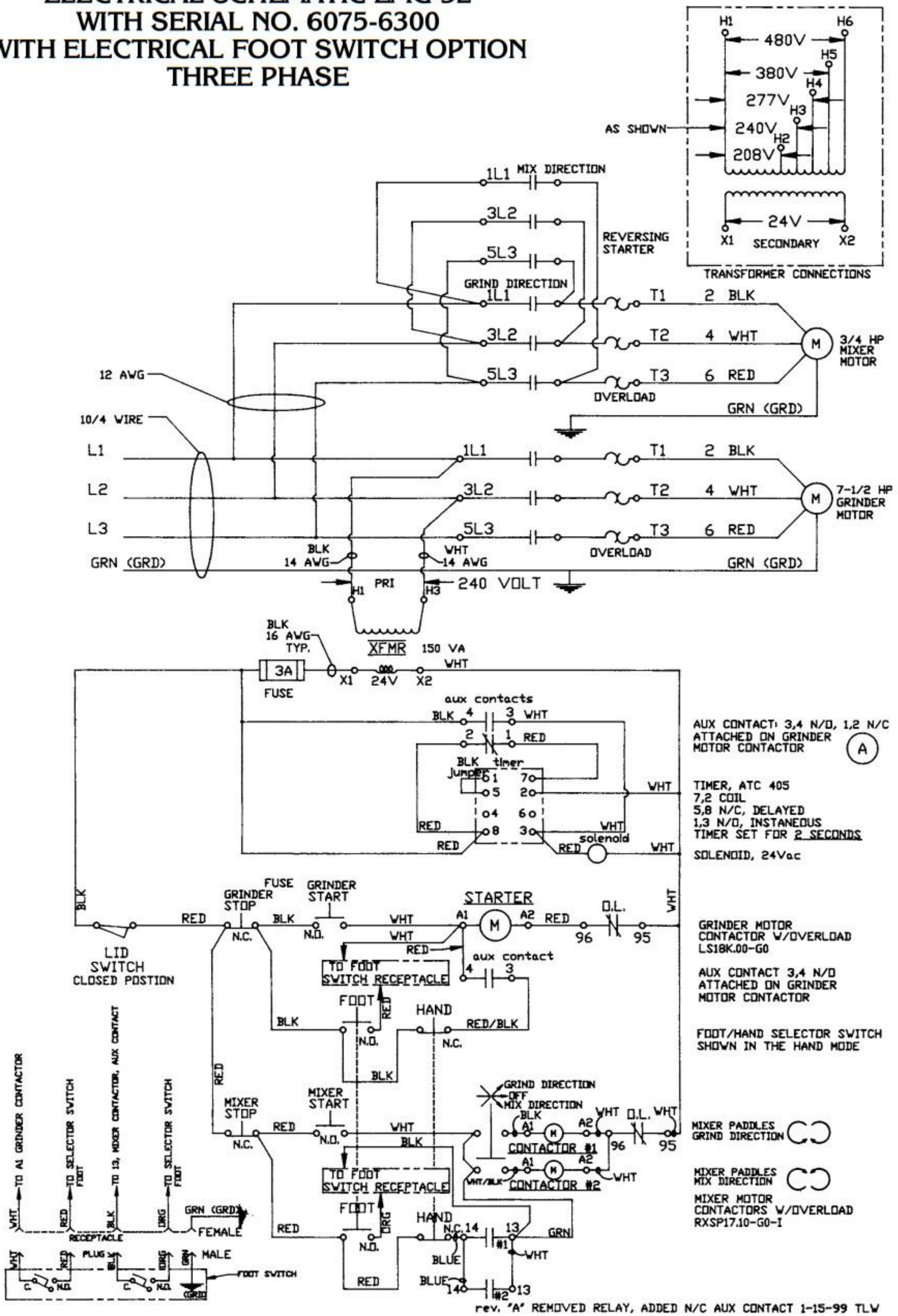

rev. 'A' REMOVED RELAY, ADDED N/C AUX CONTACT 1-15-99 TLW

ELECTRICAL SCHEMATIC

STARTING WITH SERIAL NO. 6301 – ON WITH PNEUMATIC FOOT SWITCH OPTION THREE PHASE

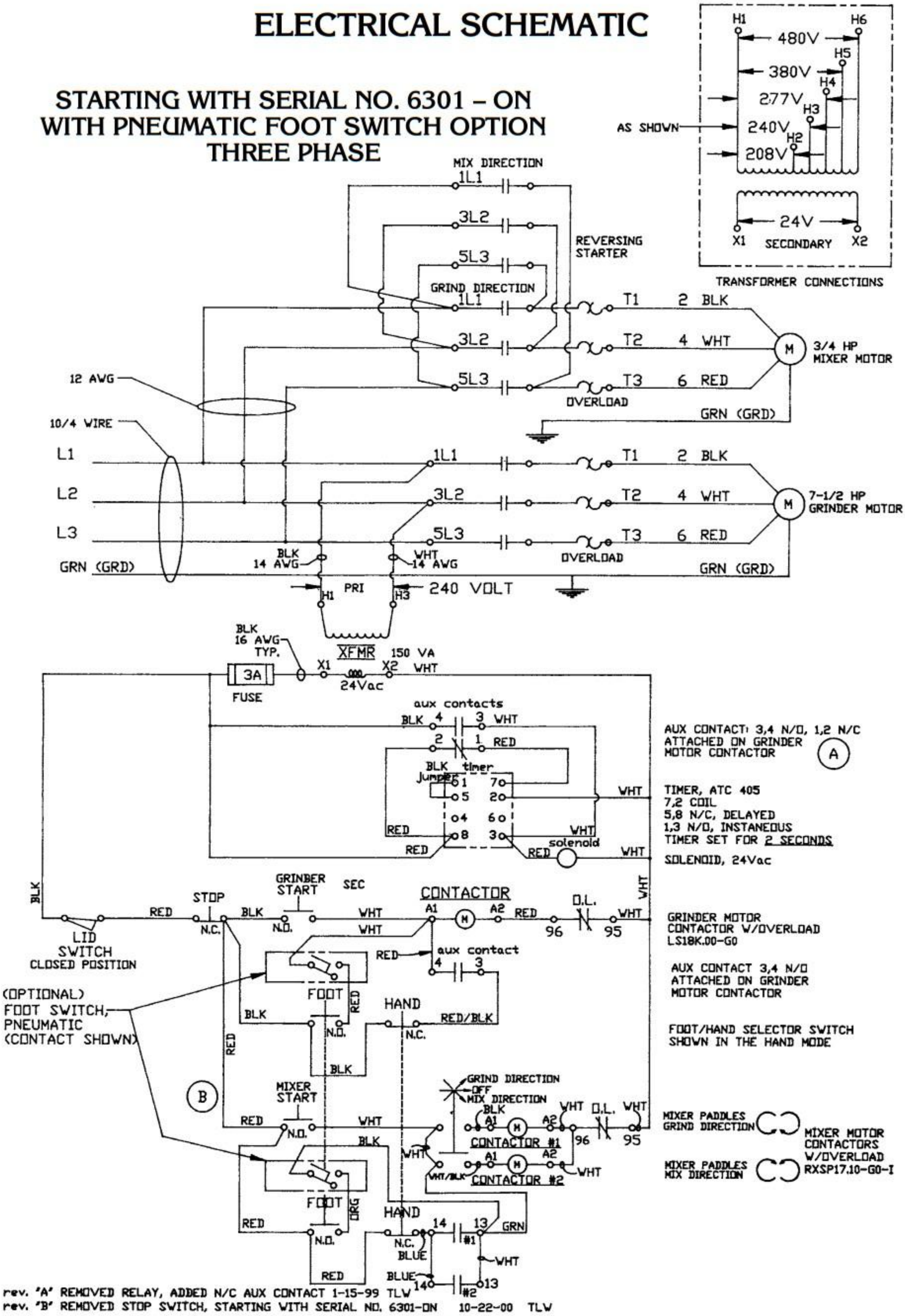

rev. 'A' REMOVED RELAY, ADDED N/C AUX CONTACT 1-15-99 TLW
rev. 'B' REMOVED STOP SWITCH, STARTING WITH SERIAL NO. 6301-ON 10-22-00 TLW

ELECTRICAL SCHEMATIC EMG-32
WITH SERIAL NO. 6075-6300
WITH PNEUMATIC FOOT SWITCH OPTION
THREE PHASE

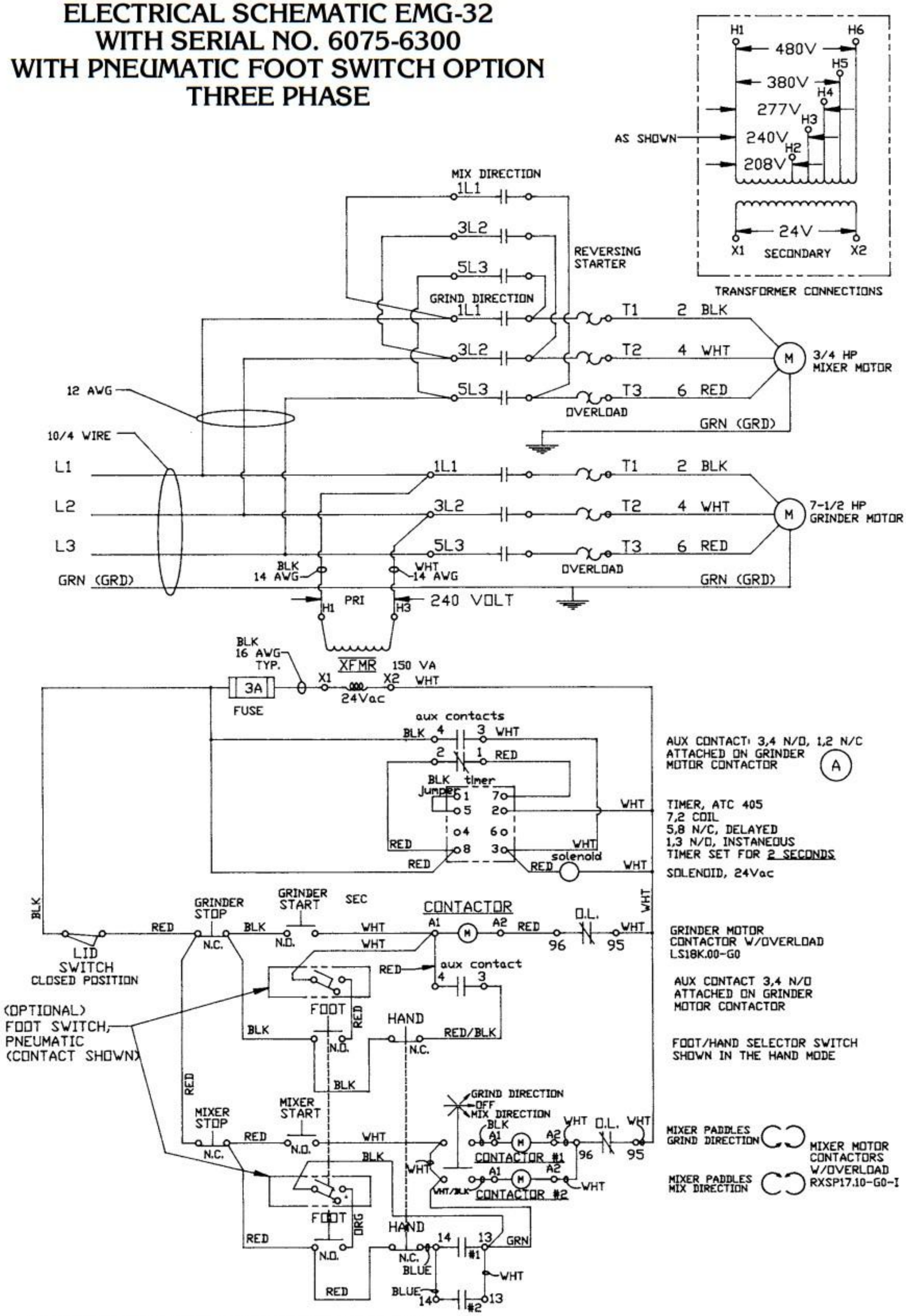

rev. 'A' REMOVED RELAY, ADDED N/C AUX CONTACT 1-15-99 TLW