Parts Breakdown

Model FR-CN-2007 *37815*

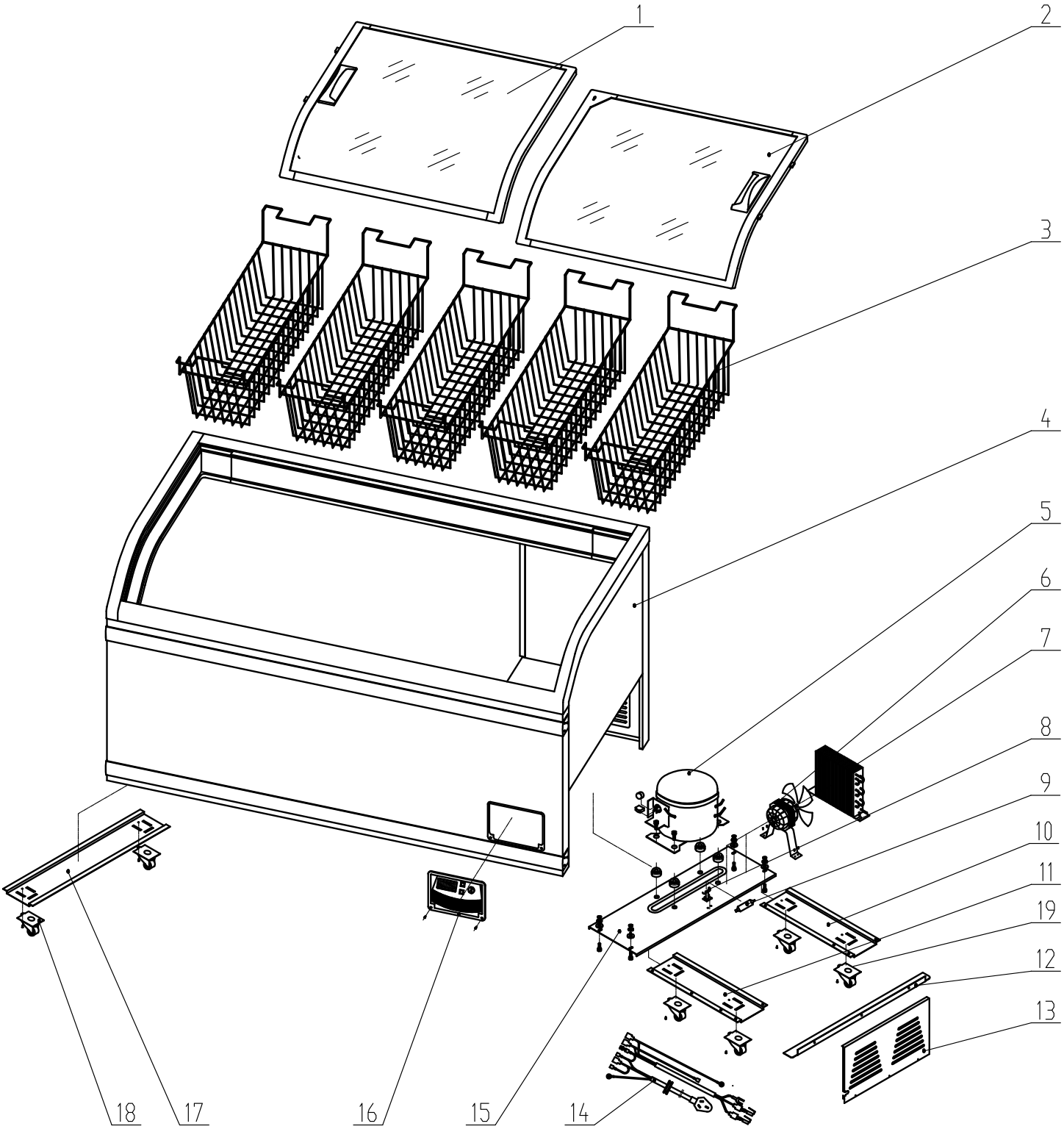

Parts Breakdown

Model FR-CN-2007 *37815*

Item No.	Description	Position
40164	Left Glass Door for 37815	1
40163	Right Glass Door for 37815	2
76695	Basket for 37815	3
AE662	Compressor for 37815	5
76698	Cooling Fan for 37815	6
76699	Condenser for 37815	7

Item No.	Description	Position
76700	Filter Support for 37815	8
76701	Filter for 37815	9
76702	Castor Channel Iron A for 37815	10
76703	Castor Channel Iron B for 37815	11
76704	Iron Liner for 37815	12
76705	Shutter for 37815	13

Item No.	Description	Position
76706	Power Cable for 37815	14
76707	Compressor Support for 37815	15
28468	Thermostat Series for 37815	16
76709	Castor Channel Iron for 37815	17
76710	Castor with Brake for 37815	18
28469	Caster without Brake for 37815	19