# Display Warmers

## Models DW-CN-0025-L, 0045-L, 0080-L, 0115-L
## Items 41868, 41870, 41872, 41873

# Instruction Manual

**STOP**
**DO NOT RETURN**
**THIS PRODUCT TO THE STORE**

For questions or assistance with this product call OMCAN Toll Free:
1 800 465 0234
Customer Service
or
visit the Support section of
www.omcan.com

*Revised - 03/29/2019*

LOCALLY
QPS
APPROVED


Toll Free: 1-800-465-0234
Fax: 905-607-0234
Email: service@omcan.com
www.omcan.com


MADE IN CHINA

NEMA
5 - 15
125 VAC / 15 AMP
RECEPTACLE

# Table of Contents

Model DW-CN-0025-L / Model DW-CN-0045-L
Model DW-CN-0080-L / Model DW-CN-0115-L


| Section | Page |
|---|---|
| General Information | 3 - 4 |
| Safety and Warranty | 4 - 5 |
| Technical Specifications | 6 |
| Installation and Operation | 6 |
| Maintenance | 7 |
| Parts Breakdown | 8 - 13 |
| Electrical Schematics | 14 - 15 |
| Notes | 16 - 18 |
| Warranty Registration | 19 |

# General Information

**Omcan Manufacturing and Distributing Company Inc., Food Machinery of America, Inc. dba Omcan and Omcan Inc. are not responsible for any harm or injury caused due to any person's improper or negligent use of this equipment. The product shall only be operated by someone over the age of 18, of sound mind, and not under the influence of any drugs or alcohol, who has been trained in the correct operation of this machine, and is wearing authorized, proper safety clothing. Any modification to the machine voids any warranty, and may cause harm to individuals using the machine or in the vicinity of the machine while in operation.**

## CHECK PACKAGE UPON ARRIVAL

Upon receipt of an Omcan shipment please inspect for external damage. If no damage is evident on the external packaging, open carton to ensure all ordered items are within the box, and there is no concealed damage to the machine. If the package has suffered rough handling, bumps or damage (visible or concealed), please note it on the bill of lading before accepting the delivery and contact Omcan within 24 hours, so we may initiate a claim with the carrier. A detailed report on the extent of the damage caused to the machine must be filled out within three days, from the delivery date shown in the shipping documents. Omcan has no recourse for damaged products that were shipped collect or third party.

**Before operating any equipment, always read and familiarize yourself with all operation and safety instructions.**

**Omcan would like to thank you for purchasing this machine. It's of the utmost importance to save these instructions for future reference. Also save the original box and packaging for shipping the equipment if servicing or returning of the machine is required.**

---

**Omcan Fabrication et distribution Companie Limité et Food Machinery d'Amerique, dba Omcan et Omcan Inc. ne sont pas responsables de tout dommage ou blessure causé du fait que toute personne ait utilisé cet équipement de façon irrégulière. Le produit ne doit être exploité que par quelqu'un de plus de 18 ans, saine d'esprit, et pas sous l'influence d'une drogue ou d'acohol, qui a été formé pour utiliser cette machine correctement, et est vêtu de vêtements de sécurité approprié. Toute modification de la machine annule toute garantie, et peut causer un préjudice à des personnes utilisant la machine ou des personnes à proximité de la machine pendant son fonctionnement.**

## VÉRIFIEZ LE COLIS DÈS RÉCEPTION

Dès réception d'une expédition d'Omcan veuillez inspecter pour dommages externes. Si aucun dommage n'est visible sur l'emballage externe, ouvrez le carton afin de s'assurer que tous les éléments commandés sont dans la boîte, et il n'y a aucun dommage dissimulé à la machine. Si le colis n'a subi aucune mauvaises manipulations, de bosses ou de dommages (visible ou cachée), notez-le sur le bond de livraison avant d'accepter la livraison et contactez Omcan dans les 24 heures qui suivent, pour que nous puissions engager une réclamation auprès du transporteur. Un rapport détaillé sur l'étendue des dommages causés à la machine doit être rempli dans un délai de trois jours, à compter de la date de livraison indiquée dans les documents d'expédition. Omcan n'a aucun droit de recours pour les produits endommagés qui ont été expédiées ou cueilli par un tiers transporteur.

# General Information

**Avant d'utiliser n'importe quel équipement, toujours lire et vous familiariser avec toutes les opérations et les consignes de sécurité.**

**Omcan voudrais vous remercier d'avoir choisi cette machine. Il est primordial de conserver ces instructions pour une référence ultérieure. Également conservez la boîte originale et l'emballage pour l'expédition de l'équipement si l'entretien ou le retour de la machine est nécessaire.**

---

**Omcan Empresa De Fabricacion Y Distribucion Inc. Y Maquinaria De Alimentos De America, Inc. dba Omcan y Omcan Inc. no son responsables de ningun daño o perjuicío causado por cualquier persona inadecuada o el uso descuidado de este equipo. El producto solo podra ser operado por una persona mayor de 18 años, en su sano juicio y no bajo alguna influencia de droga o alcohol, y que este ha sido entrenado en el correcto funcionamiento de esta máquina, y ésta usando ropa apropiada y autorizada. Cualquier modificación a la máquina anúla la garantía y puede causar daños a las personas usando la máquina mientras esta en el funcionamiento.**

## REVISE EL PAQUETE A SU LLEGADA

Tras la recepcion de un envio Omcan favor inspeccionar daños externos. Si no hay daños evidentes en el empaque exterior, Habra el carton para asegurararse que todos los articulos solicitados ésten dentro de la caja y no encuentre daños ocultos en la máquina. Si el paquete ha sufrido un manejo de poco cuidado, golpes o daños (visible o oculto) por favor anote en la factura antes de aceptar la entrega y contacte Omcan dentro de las 24 horas, de modo que podamos iniciar una reclamación con la compañia. Un informe detallado sobre los daños causados a la máquina debe ser llenado en el plazo de tres días, desde la fecha de entrega que se muestra en los documentos de envío. Omcan no tiene ningun recurso por productos dañados que se enviaron a recoger por terceros.

**Antes de utilizar cualquier equipo, siempre lea y familiarizarse con todas las instrucciones de funcionamiento y seguridad.**

**Omcan le gustaría darle las gracias por la compra de esta máquina. Es de la mayor importancia para salvar estas instrucciones para futuras consultas. Además, guarda la caja original y el embalaje para el envío del equipo si servicio técnico o devolución de la máquina que se requiere.**

# Safety and Warranty

- To prevent hazards and to ensure optimum efficiency, no modifications or alterations to the device that are not explicitly approved by the manufacturer may be undertaken.
- The device should be never left unattended during operation. Keep the device away from children.
- Keep this manual in a safe location. When passing on/selling the device to a third party, the manual must be handed over along with the device.
- Every person using the device must follow the safety warnings in this manual at all times.
- The device is to be used indoors only.

# Safety and Warranty

- Any technical service, including assembly and maintenance are to be made by a qualified Omcan service technician only.
- This appliance is not intended for use by persons (including children) with reduced physical, sensory or mental capabilities, or lack of experience and knowledge, unless they have been given supervision or instruction concerning use of the appliance by a person responsible for their safety.
- Children should be supervised to ensure that they do not play with the appliance.

**This device may only be operated in technically proper and safe condition.**

| | |
|---|---|
| **Exclusive Power Socket**<br>The power receptacle must have a reliable grounded connection. | **No Share on Socket**<br>Never let the device share the common socket with other appliance, otherwise the cable becomes hot and fire might be resulted. |
| **Protect Cables**<br>Never break or damage the cables otherwise current leakage and fire might be resulted. | **No Water Flushing**<br>Never give the device surface a flush otherwise current leakage might be resulted. |
| **Prevent from Flammables and Explosive**<br>Never put any flammable or explosive inside the device such as ether, gasoline, alcohol, adhesive and explosive. Never put dangerous product nearby the device. | |

## 1 YEAR PARTS AND LABOR BENCH WARRANTY

**Within the warranty period, contact Omcan Inc. at 1-800-465-0234 to schedule a drop off to either an Omcan authorized service depot in the area, or to an Omcan Service warehouse to repair the equipment.**

**Unauthorized maintenance will void the warranty. Warranty covers electrical and part failures, not improper use.**

**Please see https://omcan.com/disclaimer for complete info.**

## WARNING:

The packaging components are classified as normal solid urban waste and can therefore be disposed of without difficulty.

**In any case, for suitable recycling, we suggest disposing of the products separately (differentiated waste) according to the current norms.**

## DO NOT DISCARD ANY PACKAGING MATERIALS IN THE ENVIRONMENT!

# Technical Specifications

| Model | DW-CN-0025-L | DW-CN-0045-L | DW-CN-0080-L | DW-CN-0115-L |
|---|---|---|---|---|
| Temperature Range | 30 - 90°C / 86 - 194°F | | | |
| Input Power | 800 W | | 1000 W | 1300 W |
| Electrical | 110V / 60 Hz / 1 | | | |
| Storage Capacity | 25 L / 0.9 cu. ft. | 45 L / 1.6 cu. ft. | 80 L / 2.8 cu. ft. | 115 L / 4.1 cu. ft. |
| Weight | 26.5 lbs. / 12 kgs. | 31 lbs. / 14 kgs. | 36.2 lbs. / 16.4 kgs. | 43.4 lbs. / 19.7 kgs. |
| Dimensions | 22” x 15” x 12”<br>554 x 376 x 311mm | 22” x 15” x 15”<br>554 x 376 x 376mm | 27.6” x 15.8” x 14.8”<br>700 x 400 x 376mm | 27.6” x 15.8” x 19.5”<br>700 x 400 x 500mm |
| Item Number | 41868 | 41870 | 41872 | 41873 |

# Installation and Operation

## INSTALLATION

- Place the device on top of an even and stable surface which supports the weight of the device and is not heat sensitive.
- At no time should you place the device on an inflammable surface (such as table cloth, carpet, ect).
- You must not position the device near an open fireplace, electric oven/arc furnace/electric heater or other heat sources.
- Position the device in such a way that the plug is easily accessible.

## OPERATION

- Before the first use, clean the inner sides and the placing grids with a soft cloth and a mild cleaning agent. Afterwards, dry the device thoroughly.
- Remove the water bowl from the device and fill it.
- Connect the device to a single grounded power socket.
- Set the temperature as required for respective foods. You may adjust the desired temperature in the range between 30 - 90°C.
- The temperature inside of the hot display can be read from the front display.
- Put the foods in appropriate containers before placing them inside the hot display and shut it by using the sliding door.
- Some of the parts can become very hot, always use safety gloves when placing or removing foods.
- The food is kept warm at the temperature set by you previously.
- In order to place or remove foods, you may open the door on the back of the unit.
- The inner light can be turned on at any time by using the light switch on the device.
- Disconnect the device from the power socket when the device is not in use.

# Maintenance

- Before starting any repair or cleaning, make sure the device has been disconnected from the power socket and has cooled down completely.
- Don't use any acidic agents and make sure no water enters the device.
- To protected yourself from electric shock, never immerse the device, its cables or the plug in water or other liquids.
- Do not use a pressured water jet to clean.

## CLEANING

- The device should be cleaned regularly.
- Clean the unit and placing grids with a soft, damp cloth and a mild cleaning agent.
- Clean the water bowl regularly. Calcifications on the water bowl may be removed with common agents or liquids.
- Only use a soft cloth and make sure you never use any kind of abrasive agents or pads which could scratch the surface.
- After the cleaning procedure, you should use a soft and dry cloth to wipe the surface.
- Make sure the device has been cleaned properly before storing it in a dry place.

## MAINTENANCE

- Check the main power cable from time to time to ensure it is not damaged in any way. Never use the device if it is damaged. If the power cable is damaged, it must be replaced by a qualified electrician.
- Only a qualified technician should carry out repairs and maintenance of the device. Do not attempt to repair the device by yourself.

## REFERENCE

| Item Number | Model Number | Description | Manufacturer Model Number |
|---|---|---|---|
| 41868 | DW-CN-0025-L | Display Warmer 25L - Front Curved Glass 110V/60Hz cQPSus | RTR-25L |
| 41870 | DW-CN-0045-L | Display Warmer 45L - Front Curved Glass 110V/60Hz cQPSus | RTR-45L |
| 41872 | DW-CN-0080-L | Display Warmer 80L - 4 Hinged Door Square Glass 110V/60Hz cQPSus | RTR-80L |
| 41873 | DW-CN-0115-L | Display Warmer 115L - 6 Hinged Door Square Glass 110V/60Hz cQPSus | RTR-115L |

# Parts Breakdown

## Model DW-CN-0025-L *41868*

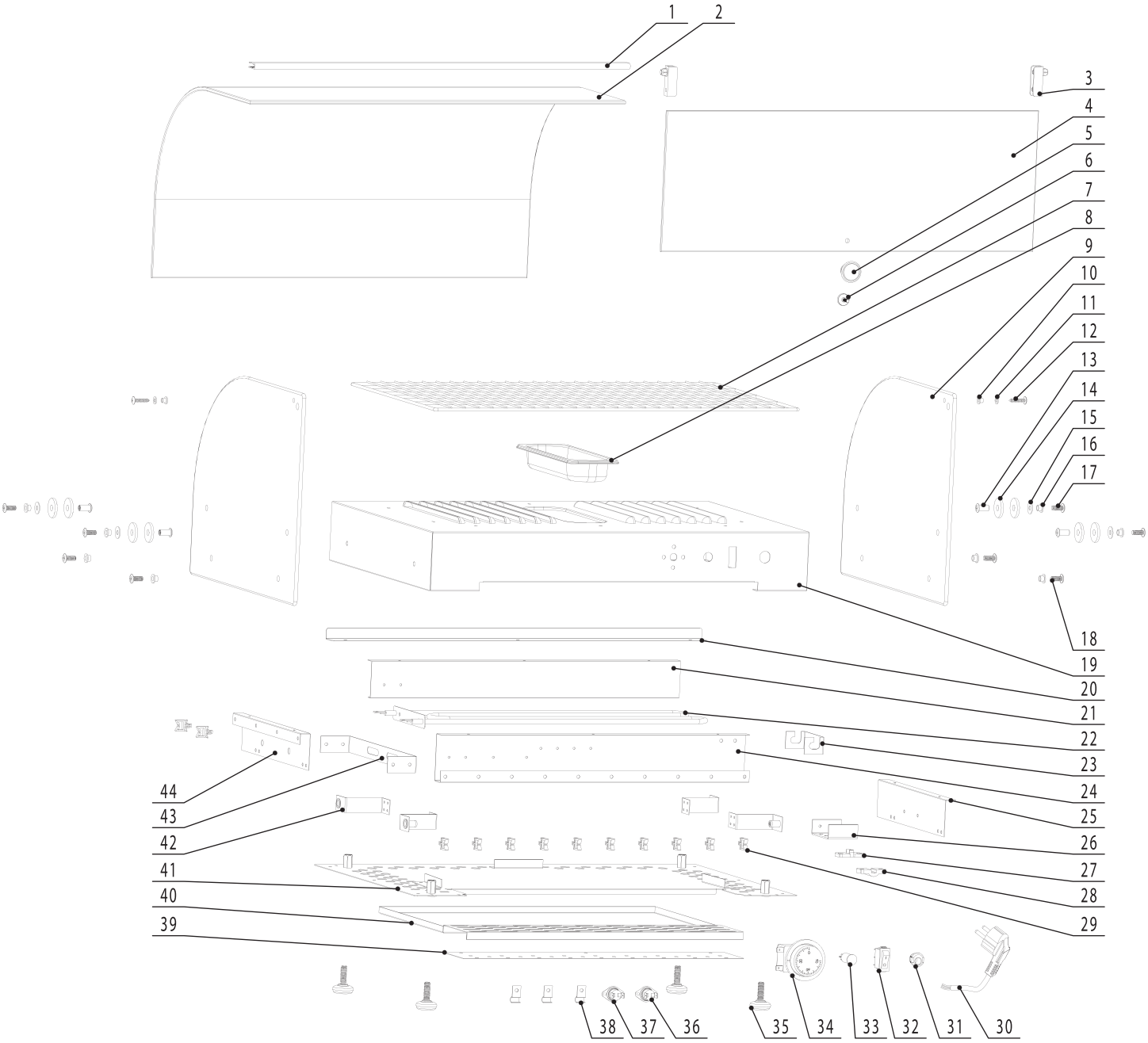

# Parts Breakdown

## Model DW-CN-0045-L *41870*

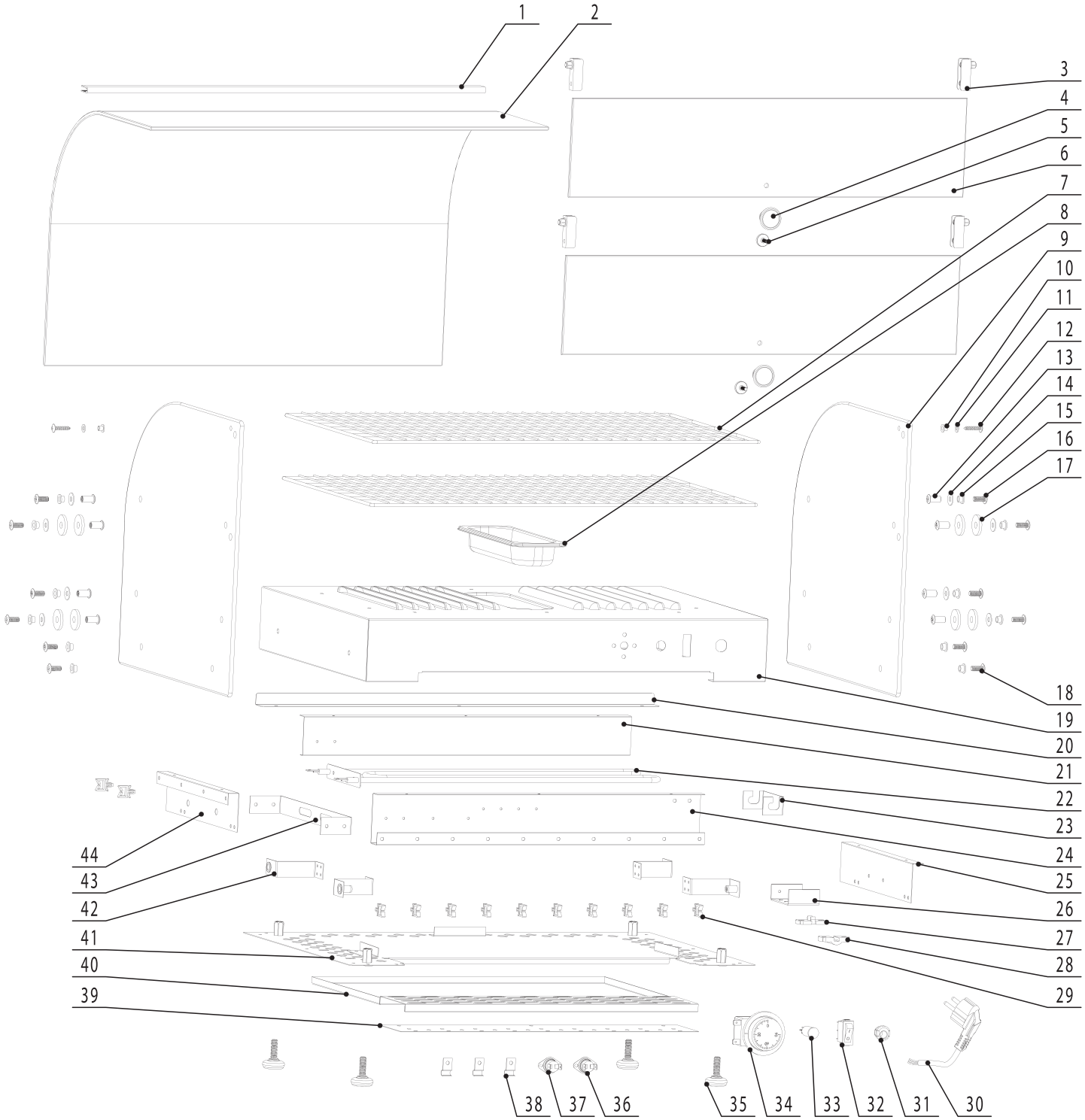

# Parts Breakdown

## Model DW-CN-0080-L *41872*

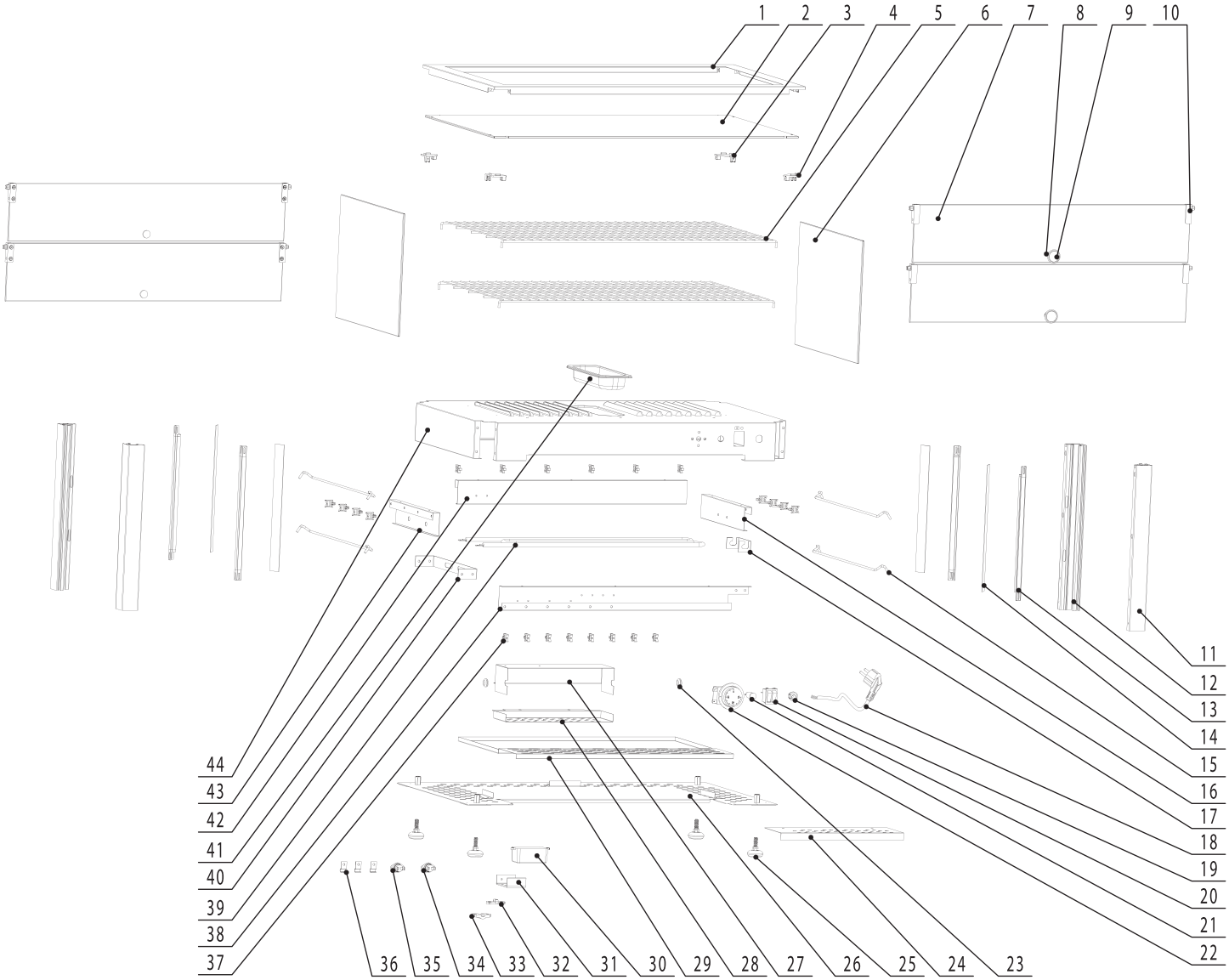

# Parts Breakdown

## Model DW-CN-0115-L *41873*

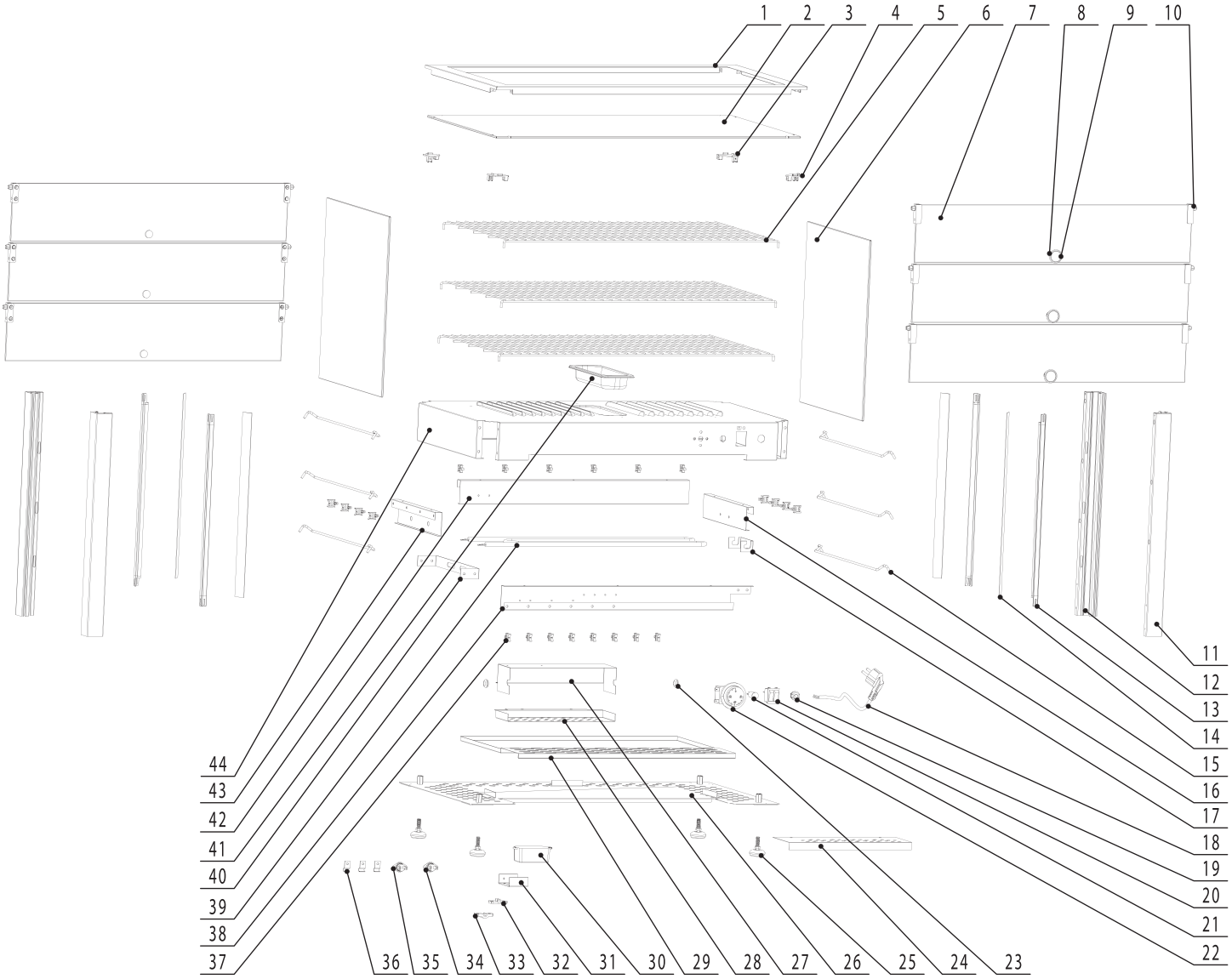

# Parts Breakdown

## Model DW-CN-0025-L *41868*

| Item No. | Description | Position |
|---|---|---|
| 69075 | Glass Bracket for RTR-25L | 1 |
| 78072 | Curved Glass for RTR-25L | 2 |
| 69076 | Hinge for RTR-25L | 3 |
| 78110 | Door Glass for RTR-25L | 4 |
| 78035 | Handle for RTR-25L | 5 |
| 78034 | Nail for Glass for RTR-25L | 6 |
| 78077 | Shelf for RTR-25L | 7 |
| 60735 | Water Receiver for RTR-25L | 8 |
| 78079 | Side Glass for RTR-25L | 9 |
| 69077 | T-Type Washer M5 for RTR-25L | 10 |
| 69078 | Washer M5 for RTR-25L | 11 |
| 69079 | Stainless Steel Screws for RTR-25L | 12 |
| 69080 | Nut M6x15 for RTR-25L | 13 |
| 60198 | Vibration Absorbing Gasket for RTR-25L | 14 |

| Item No. | Description | Position |
|---|---|---|
| 69081 | Stainless Steel Flat Washer 6x16x1 for RTR-25L | 15 |
| 69082 | T-Type Washer M6 for RTR-25L | 16 |
| 69083 | Screw M6x15 for RTR-25L | 17 |
| 69084 | Screw M6x20 for RTR-25L | 18 |
| 69085 | Middle Panel for RTR-25L | 19 |
| 78080 | Baseboard Hanger for RTR-25L | 20 |
| 78081 | Front Panel for RTR-25L | 21 |
| 69086 | Heating Element for RTR-25L | 22 |
| 78043 | Heating Element Frame for RTR-25L | 23, 43 |
| 78083 | Rear Panel for RTR-25L | 24 |
| 69087 | Right Panel for RTR-25L | 25 |
| 78056 | Cable Clip Fixer for RTR-25L | 26 |
| 60117 | Base of Cable Clip for RTR-25L | 27 |
| 60116 | Cover of Cable Clip for RTR-25L | 28 |

| Item No. | Description | Position |
|---|---|---|
| 78121 | Plug-Type Fixer for RTR-25L | 29 |
| 60214 | Power Line for RTR-25L | 30 |
| 79291 | Wire Clip for RTR-25L | 31 |
| 30597 | Switch for RTR-25L | 32 |
| 60218 | Indicator Light for RTR-25L | 33 |
| 78061 | Probe Pressing Plate for RTR-25L | 34, 38 |
| 60181 | Adjustable Feet for RTR-25L | 35 |
| 71661 | Control 150°C for RTR-25L | 36 |
| 71662 | Control 125°C for RTR-25L | 37 |
| 78097 | Baffle for RTR-25L | 39 |
| 78098 | Drawer for RTR-25L | 40 |
| 69088 | Baseboard for RTR-25L | 41 |
| 69089 | Panel Bracket for RTR-25L | 42 |
| 69090 | Right Panel for RTR-25L | 44 |

## Model DW-CN-0045-L *41870*

| Item No. | Description | Position |
|---|---|---|
| 69075 | Glass Bracket for RTR-45L | 1 |
| 78106 | Curved Glass for RTR-45L | 2 |
| 69076 | Hinge for RTR-45L | 3 |
| 78035 | Handle for RTR-45L | 4 |
| 78034 | Nail for Glass for RTR-45L | 5 |
| 78110 | Door Glass for RTR-45L | 6 |
| 78077 | Shelf for RTR-45L | 7 |
| 60735 | Water Receiver for RTR-45L | 8 |
| 78113 | Side Glass for RTR-45L | 9 |
| 69077 | T-Type Washer M5 for RTR-45L | 10 |
| 69078 | Washer M5 for RTR-45L | 11 |
| 69079 | Stainless Steel Screws for RTR-45L | 12 |
| 69080 | Nut M6x15 for RTR-45L | 13 |
| 69081 | Stainless Steel Flat Washer 6x16x1 for RTR-45L | 14 |

| Item No. | Description | Position |
|---|---|---|
| 69082 | T-Type Washer M6 for RTR-45L | 15 |
| 69083 | Screw M6x15 for RTR-45L | 16 |
| 60198 | Vibration Absorbing Gasket for RTR-45L | 17 |
| 69084 | Screw M6x20 for RTR-45L | 18 |
| 69085 | Middle Panel for RTR-45L | 19 |
| 78080 | Baseboard Hanger for RTR-45L | 20 |
| 78081 | Front Panel for RTR-45L | 21 |
| 69086 | Heating Element for RTR-45L | 22 |
| 78043 | Heating Element Frame for RTR-45L | 23, 43 |
| 78083 | Rear Panel for RTR-45L | 24 |
| 69087 | Right Panel for RTR-45L | 25 |
| 78056 | Cable Clip Fixer for RTR-45L | 26 |
| 60117 | Base of Cable Clip for RTR-45L | 27 |
| 60116 | Cover of Cable Clip for RTR-45L | 28 |

| Item No. | Description | Position |
|---|---|---|
| 78121 | Plug-Type Fixer for RTR-45L | 29 |
| 60214 | Power Line for RTR-45L | 30 |
| 79291 | Wire Clip for RTR-45L | 31 |
| 30597 | Switch for RTR-45L | 32 |
| 60218 | Indicator Light for RTR-45L | 33 |
| 78061 | Probe Pressing Plate for RTR-45L | 34, 38 |
| 60181 | Adjustable Feet for RTR-45L | 35 |
| 71661 | Control 150°C for RTR-45L | 36 |
| 71662 | Control 125°C for RTR-45L | 37 |
| 78097 | Baffle for RTR-45L | 39 |
| 78098 | Drawer for RTR-45L | 40 |
| 78099 | Baseboard for RTR-45L | 41 |
| 69089 | Panel Bracket for RTR-45L | 42 |
| 69090 | Right Panel for RTR-45L | 44 |

# Parts Breakdown

## Model DW-CN-0080-L *41872*

| Item No. | Description | Position |
|---|---|---|
| 78027 | Decorative Frame for RTR-80L | 1 |
| 78028 | Top Glass for RTR-80L | 2 |
| 78030 | Top Glass Base A for RTR-80L | 3 |
| 78029 | Top Glass Base B for RTR-80L | 4 |
| 78031 | Shelf for RTR-80L | 5 |
| 69088 | Side Glass for RTR-80L | 6 |
| 78033 | Door Glass for RTR-80L | 7 |
| 78034 | Nail for Glass for RTR-80L | 8 |
| 78035 | Handle for RTR-80L | 9 |
| 69076 | Hinge for RTR-80L | 10 |
| 69091 | A-Pillar for RTR-80L | 11 |
| 69092 | B-Pillar for RTR-80L | 12 |
| 69093 | LED for RTR-80L | 13 |
| 69094 | LED Separator for RTR-80L | 14 |
| 78041 | Shelf Frame for RTR-80L | 15 |

| Item No. | Description | Position |
|---|---|---|
| 78042 | Right Panel for RTR-80L | 16 |
| 69097 | Heating Element Hanger 1 for RTR-80L | 17 |
| 60214 | Power Line for RTR-80L | 18 |
| 79291 | Wire Clip for RTR-80L | 19 |
| 70688 | Switch for RTR-80L | 20 |
| 60218 | Indicator Light for RTR-80L | 21 |
| 71640 | Temperature Thermostat for RTR-80L | 22 |
| 69095 | Double-Face Protective Ring for RTR-80L | 23 |
| 78050 | Baffle for RTR-80L | 24 |
| 60181 | Adjustable Feet for RTR-80L | 25 |
| 78052 | Baseboard for RTR-80L | 26 |
| 78053 | Electric Box for RTR-80L | 27 |
| 78054 | Electric Cover for RTR-80L | 28 |
| 78055 | Drawer for RTR-80L | 29 |
| 60145 | #6 Driver for RTR-80L | 30 |

| Item No. | Description | Position |
|---|---|---|
| 78056 | Cable Clip Fixer for RTR-80L | 31 |
| 60117 | Base of Cable Clip for RTR-80L | 32 |
| 60116 | Cover of Cable Clip for RTR-80L | 33 |
| 71661 | Control 150°C for RTR-80L | 34 |
| 71662 | Control 125°C for RTR-80L | 35 |
| 78061 | Probe Pressing Plate for RTR-80L | 36 |
| 78062 | Plug-Type Fixer for RTR-80L | 37 |
| 78063 | Rear Panel for RTR-80L | 38 |
| 69096 | Heating Element for RTR-80L | 39 |
| 78043 | Heating Element Frame 2 for RTR-80L | 40 |
| 60735 | Water Receiver for RTR-80L | 41 |
| 78066 | Front Panel for RTR-80L | 42 |
| 78067 | Left Panel for RTR-80L | 43 |
| 78068 | Grill for RTR-80L | 44 |

## Model DW-CN-0115-L *41873*

| Item No. | Description | Position |
|---|---|---|
| 78027 | Decorative Frame for RTR-115L | 1 |
| 78028 | Top Glass for RTR-115L | 2 |
| 78030 | Top Glass Base A for RTR-115L | 3 |
| 78029 | Top Glass Base B for RTR-115L | 4 |
| 78031 | Shelf for RTR-115L | 5 |
| 78032 | Side Glass for RTR-115L | 6 |
| 78033 | Door Glass for RTR-115L | 7 |
| 78034 | Nail for Glass for RTR-115L | 8 |
| 78035 | Handle for RTR-115L | 9 |
| 69076 | Hinge for RTR-115L | 10 |
| 78037 | Pillar A for RTR-115L | 11 |
| 78038 | Pillar B for RTR-115L | 12 |
| 78039 | LED Light for RTR-115L | 13 |
| 78040 | LED Partition for RTR-115L | 14 |
| 78041 | Shelf Frame for RTR-115L | 15 |

| Item No. | Description | Position |
|---|---|---|
| 78042 | Right Panel for RTR-115L | 16 |
| 69097 | Heating Element Hanger 1 for RTR-115L | 17 |
| 69098 | Power Line for RTR-115L | 18 |
| 79291 | Wire Clip for RTR-115L | 19 |
| 70688 | Switch for RTR-115L | 20 |
| 60218 | Indicator Light for RTR-115L | 21 |
| 71640 | Temperature Thermostat for RTR-115L | 22 |
| 69095 | Double-Face Protective Ring for RTR-115L | 23 |
| 78050 | Baffle for RTR-115L | 24 |
| 60181 | Adjustable Feet for RTR-115L | 25 |
| 78052 | Baseboard for RTR-115L | 26 |
| 78053 | Electric Box for RTR-115L | 27 |
| 78054 | Electric Cover for RTR-115L | 28 |
| 78055 | Drawer for RTR-115L | 29 |
| 60145 | #6 Driver for RTR-115L | 30 |

| Item No. | Description | Position |
|---|---|---|
| 78056 | Cable Clip Fixer for RTR-115L | 31 |
| 60117 | Base of Cable Clip for RTR-115L | 32 |
| 60116 | Cover of Cable Clip for RTR-115L | 33 |
| 71661 | Control 150°C for RTR-115L | 34 |
| 71662 | Control 125°C for RTR-115L | 35 |
| 78061 | Probe Pressing Plate for RTR-115L | 36 |
| 78062 | Plug-Type Fixer for RTR-115L | 37 |
| 78063 | Rear Panel for RTR-115L | 38 |
| 69096 | Heating Element for RTR-115L | 39 |
| 78043 | Heating Element Frame 2 for RTR-115L | 40 |
| 60735 | Water Receiver for RTR-115L | 41 |
| 78066 | Front Panel for RTR-115L | 42 |
| 78067 | Left Panel for RTR-115L | 43 |
| 78068 | Grill for RTR-115L | 44 |

# Electrical Schematics

***Model DW-CN-0025-L*** *41868*
***Model DW-CN-0045-L*** *41870*

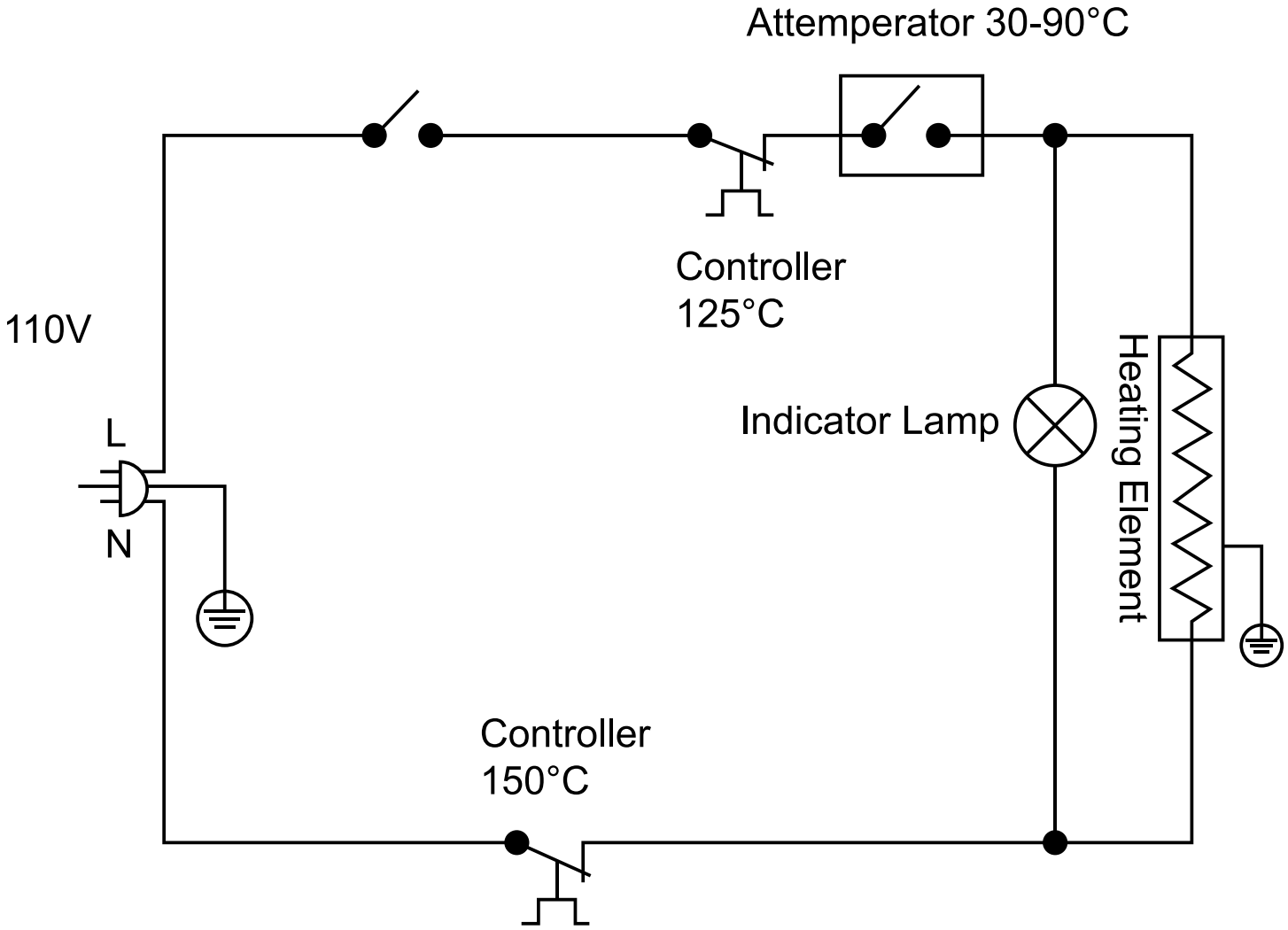

# Electrical Schematics

***Model DW-CN-0080-L*** *41872*
***Model DW-CN-0115-L*** *41873*

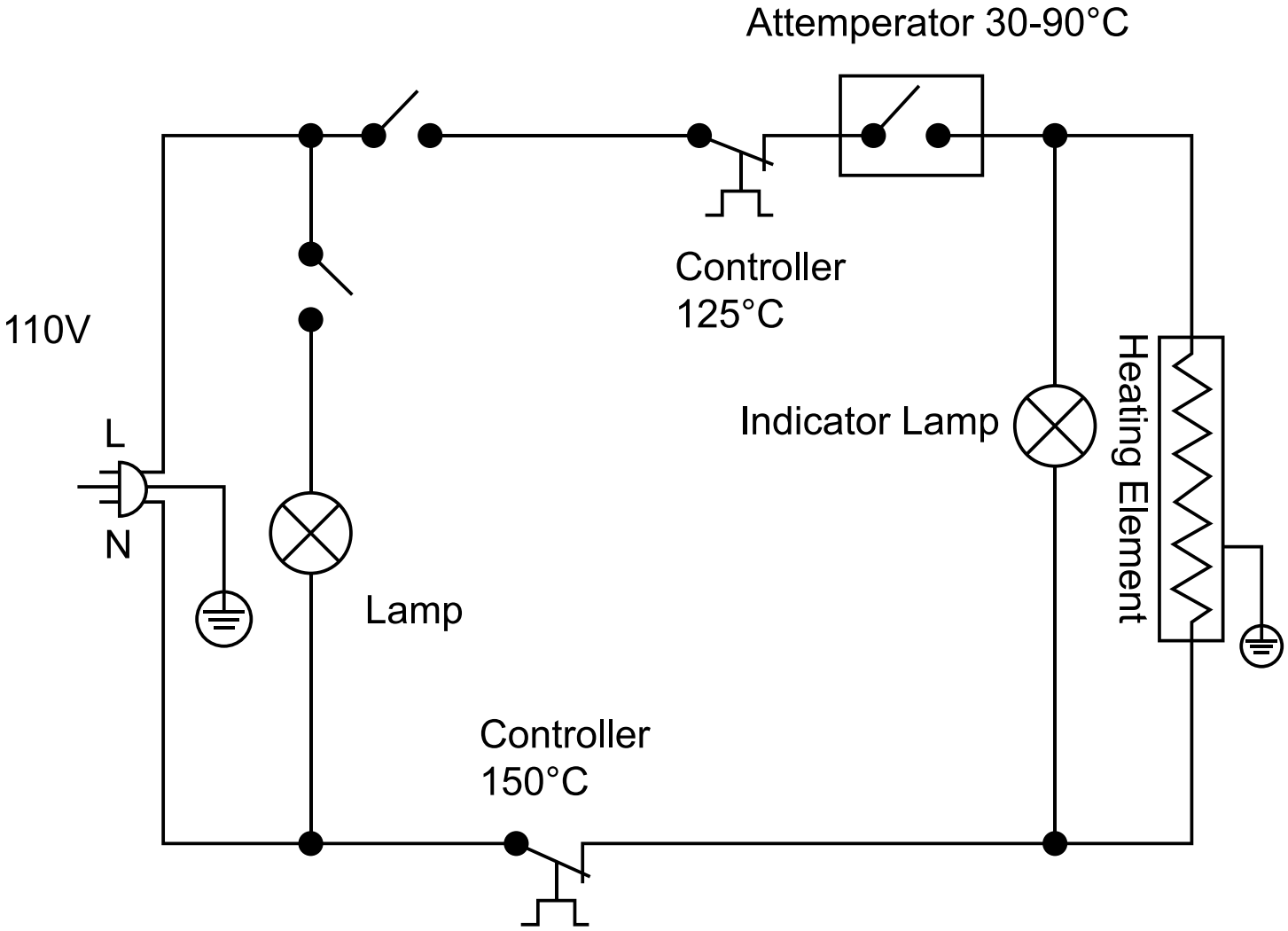

# Notes

# Notes

# Notes

# Warranty Registration

Thank you for purchasing an Omcan product. To register your warranty for this product, complete the information below, tear off the card at the perforation and then send to the address specified below. You can also register online by visiting:

Merci d'avoir acheté un produit Omcan. Pour enregistrer votre garantie pour ce produit, complétez les informations ci-dessous, détachez la carte au niveau de la perforation, puis l'envoyer à l'adresse spécifié ci-dessous. Vous pouvez également vous inscrire en ligne en visitant:

Gracias por comprar un producto Omcan usted. Para registrar su garantía para este producto, complete la información a continuación, cortar la tarjeta en la perforación y luego enviarlo a la dirección indicada a continuación. También puede registrarse en línea en:

***https://omcan.com/warranty-registration/***

**For mailing in Canada**

**Pour postale au Canada**

**Por correo en Canadá**

**OMCAN**
PRODUCT WARRANTY REGISTRATION
3115 Pepper Mill Court,
Mississauga, Ontario
Canada, L5L 4X5

**For mailing in the US**

**Pour diffusion aux États-Unis**

**Por correo en los EE.UU.**

**OMCAN**
PRODUCT WARRANTY REGISTRATION
4450 Witmer Industrial Estates, Unit 4,
Niagara Falls, New York
USA, 14305

***or email to: service@omcan.com***

Purchaser's Information

Name: _____

Address: _____

City: _____ Province or State: _____ Postal or Zip: _____

Country: _____

Dealer from which Purchased: _____

Dealer City: _____ Dealer Province or State: _____

Invoice: _____

Company Name: _____

Telephone: _____

Email Address: _____

Type of Company:

☐ Restaurant ☐ Bakery ☐ Deli

☐ Butcher ☐ Supermarket ☐ Caterer

☐ Institution *(specify)*: _____

☐ Other *(specify)*: _____

Model Name: _____ Model Number: _____ Serial Number: _____

Machine Description: _____

Date of Purchase (MM/DD/YYYY): _____ Date of Installation (MM/DD/YYYY): _____

Would you like to extend the warranty? ☐ Yes ☐ No

**Thank you for choosing Omcan | Merci d'avoir choisi Omcan | Gracias por elegir Omcan**

Since 1951 Omcan has grown to become a leading distributor of equipment and supplies to the North American food service industry. Our success over these many years can be attributed to our commitment to strengthen and develop new and existing relationships with our valued customers and manufacturers. Today with partners in North America, Europe, Asia and South America, we continually work to improve and grow the company. We strive to offer customers exceptional value through our qualified local sales and service representatives who provide convenient access to over 5,000 globally sourced products.

---

Depuis 1951 Omcan a grandi pour devenir un des “leaders” de la distribution des équipements et matériel pour l’industrie des services alimentaires en Amérique du Nord. Notre succès au cours de ces nombreuses années peut être attribué à notre engagement à renforcer et à développer de nouvelles et existantes relations avec nos clients et les fabricants de valeur. Aujourd’hui avec des partenaires en Amérique du Nord, Europe, Asie et Amérique du Sud, nous travaillons continuellement à améliorer et développer l’entreprise. Nous nous efforçons d’offrir à nos clients une valeur exceptionnelle grâce à nos ventes locales qualifiées et des représentants de service qui offrent un accès facile à plus de 5000 produits provenant du monde entier.

---

Desde 1951 Omcan ha crecido hasta convertirse en un líder en la distribución de equipos y suministros de alimentos en América del Norte industria de servicios. Nuestro éxito en estos años se puede atribuir a nuestro compromiso de fortalecer y desarrollar nuevas relaciones existentes con nuestros valiosos clientes y fabricantes. Hoy con socios de América del Norte, Europa, Asia y América del Sur, que trabajan continuamente para mejorar y crecer la empresa. Nos esforzamos por ofrecer a nuestros clientes valor excepcional a través de nuestro local de ventas y representantes de los servicios que proporcionan un fácil acceso a más de 5,000 productos con origen a nivel mundial.