Parts Breakdown

Model BB-CN-0017-HC *50040*

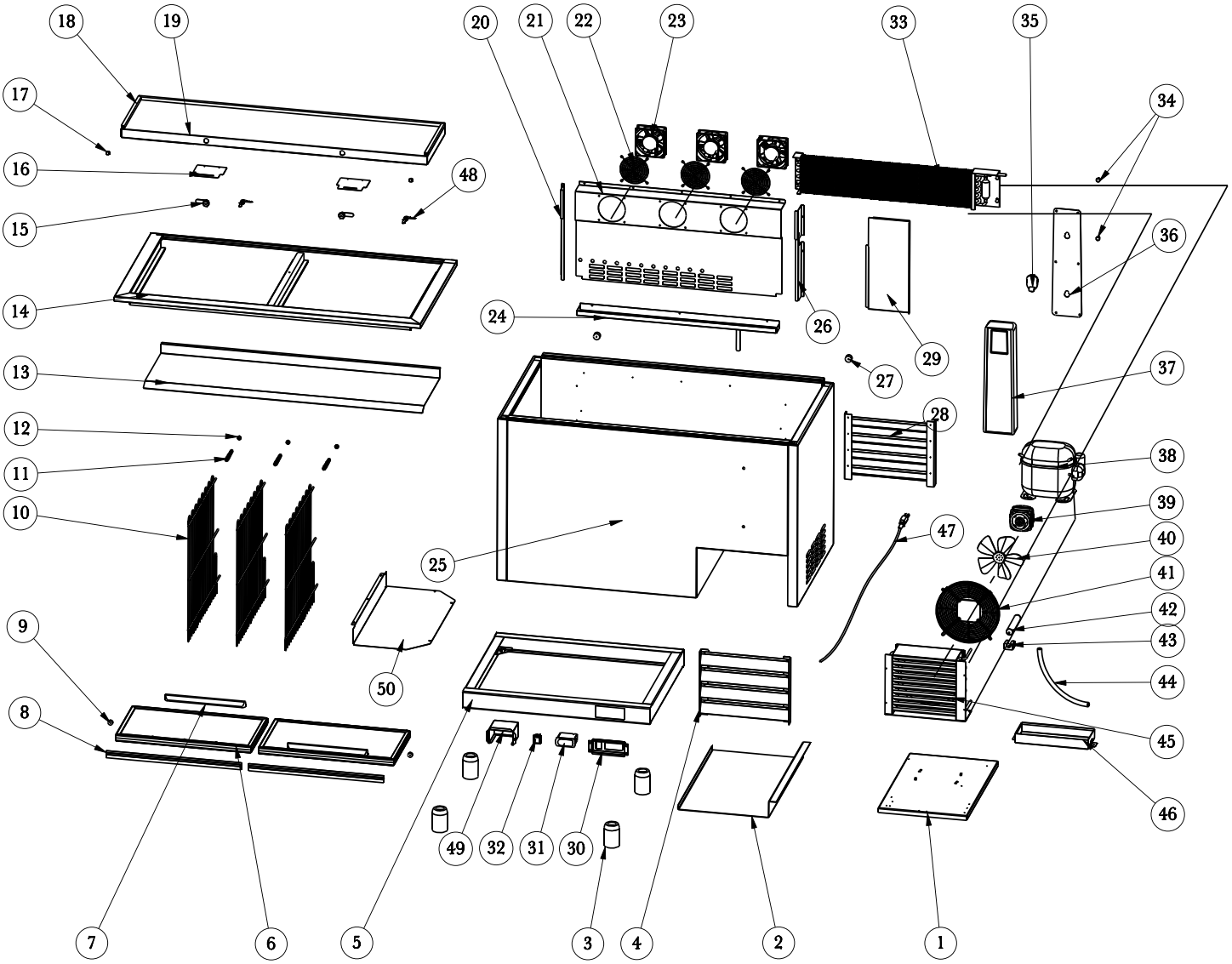

Parts Breakdown

Model BB-CN-0017-HC *50040*

Item No.	Description	Position
AE987	Compressor Unit Installation Board for 50040	1
AE988	Base Board for 50040	2
AA185	Leveling Feet for 50040	3
AF005	Front Grill for 50040	4
AF842	Cabinet Base for 50040	5
AF843	Door for 50040	6
62363	Door Handle for 50040	7
AE971	Door Gasket for 50040	8
AF844	Door Limit Block for 50040	9
AA225	Shelf for 50040	10
AA226	Shelf Spring for 50040	11
AA227	Shelf Cap for 50040	12
AF845	Panel Under Table with Component for 50040	13 - 14
AA197	Lock for 50040	15
AE977	Base Board for Lock for 50040	16
AA231	Decoration Cover for 50040	17

Item No.	Description	Position
AF847	Decoration Strip for 50040	18
AF848	Top Board for 50040	19
AE996	Left Support for Evaporator Cover for 50040	20
AF849	Evaporator Cover for 50040	21
AA201	Evaporator Fan Motor Cover for 50040	22
AE901	Evaporator Fan Motor for 50040	23
AF850	Inner Drain Pan for 50040	24
AE999	Right Support for Evaporator Cover for 50040	26
AA192	Back Limit Block for 50040	27
AF000	Back Grill for 50040	28
AF840	Inner Baffle for 50040	29
AE984	Thermostat Installation Cover for 50040	30
AB109	Thermostat for 50040	31
AA124	Power Switch for 50040	32
AA274	Evaporator for 50040	33
AA243	Screw for Bottle Opener Component for 50040	34

Item No.	Description	Position
AA244	Bottle Opener for 50040	35
AF841	Bottle Opener Board for 50040	36
AA246	Bottle Opener Cover for 50040	37
AF740	Compressor for 50040	38
AA247	Condenser Fan Motor for 50040	39
AA248	Condenser Fan Blade for 50040	40
AA249	Condenser Fan Motor Cover for 50040	41
AB594	Filter for 50040	42
AB595	Filter Fixer for 50040	43
AA216	Drain Tube for 50040	44
AA250	Condenser for 50040	45
AE905	Outer Drain Pan for 50040	46
AA135	Power Cord for 50040	47
AA196	Key for 50040	48
AA214	Thermostat Water Proof Cover for 50040	49
AF004	Thermostat Baffle for 50040	50