CHUTE GUARD WIRING DIAGRAM

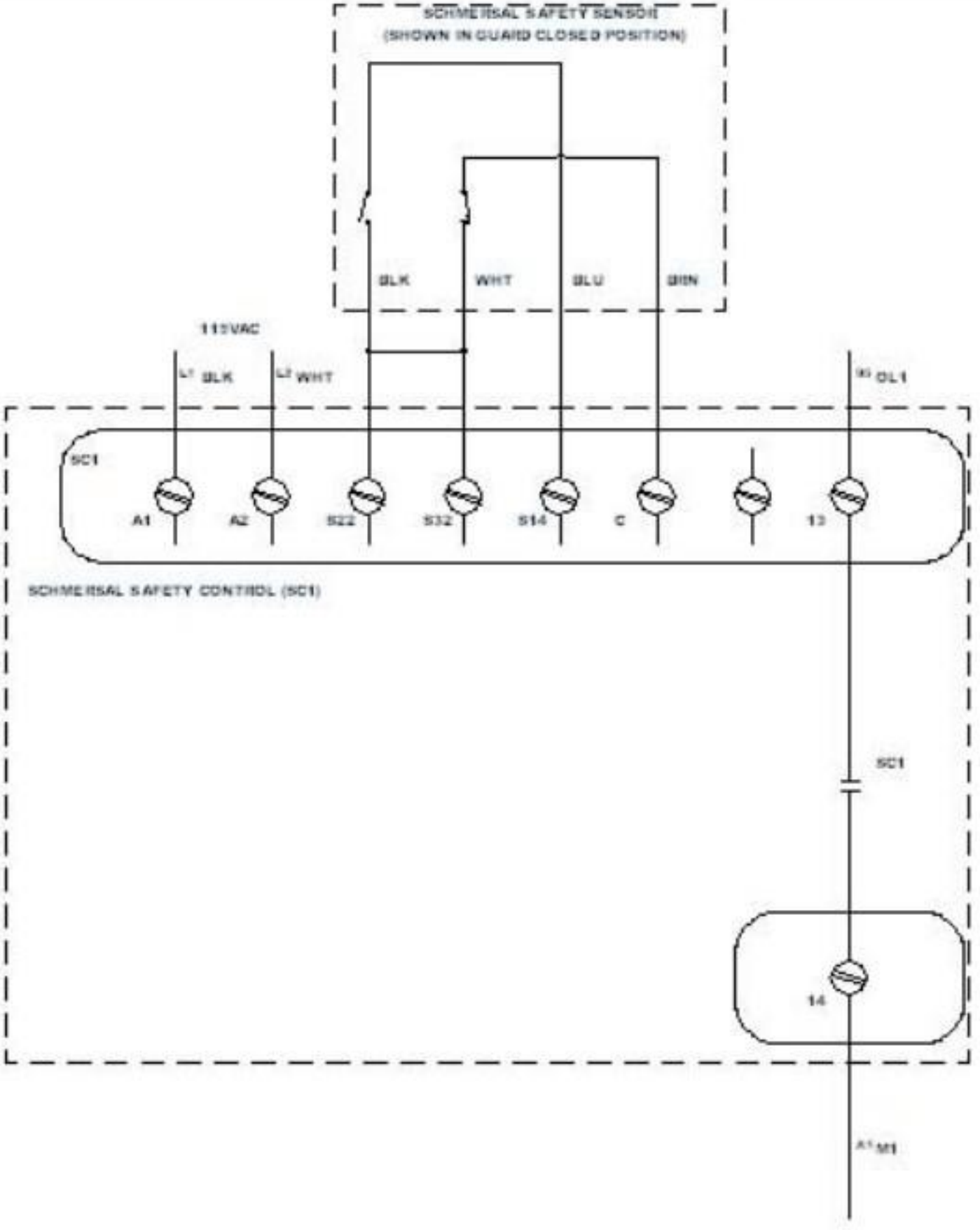

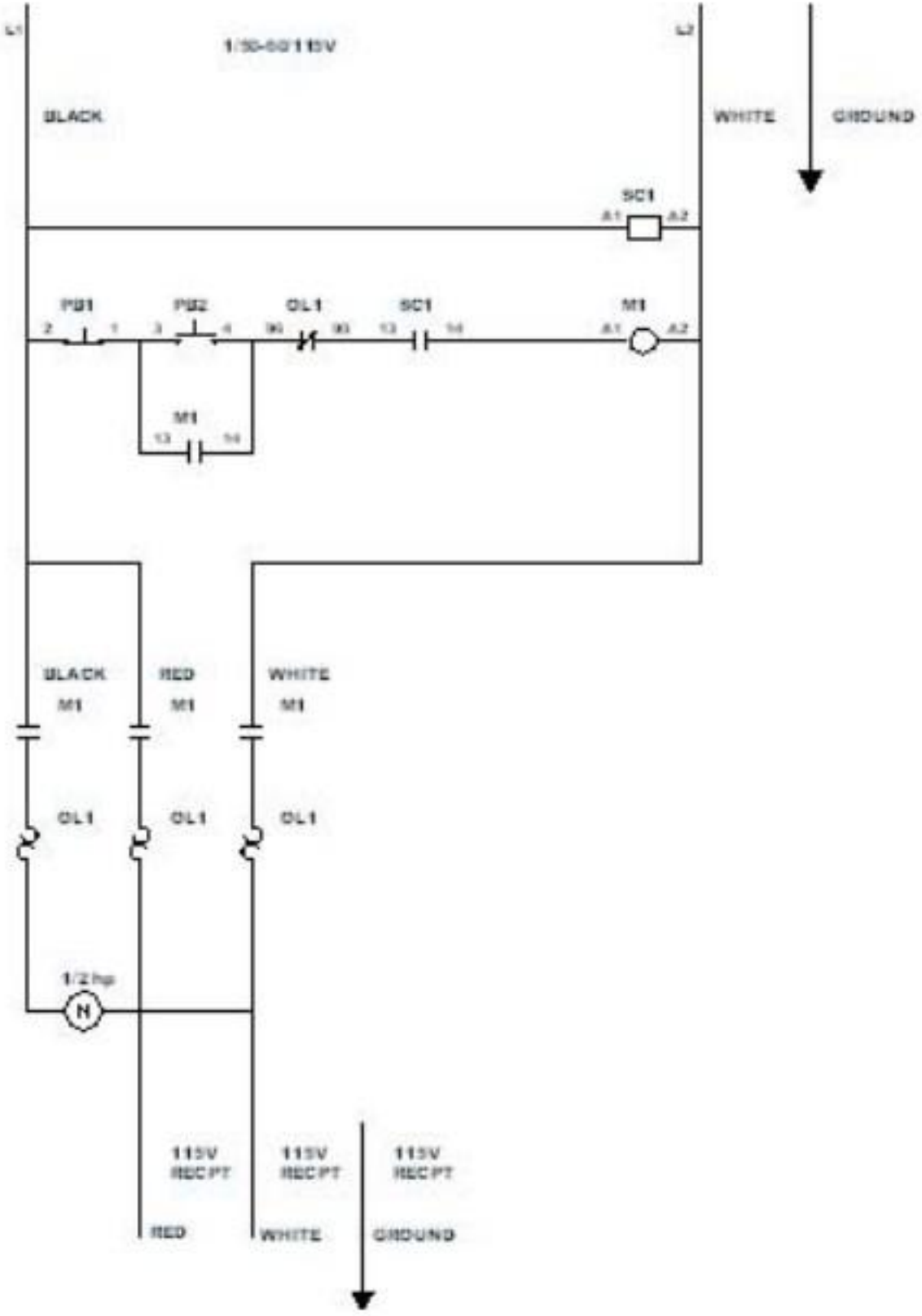
L1
L2
BLACK
WHITE
GROUND
SC1
A1
A2
PB1
PB2
OL1
SC1
M1
M1
BLACK
M1
RED
M1
WHITE
M1
OL1
OL1
OL1
1/2hp
M
115V
RECPT
115V
RECPT
115V
RECPT
RED
WHITE
GROUND

Wiring Diagram (Single Phase)

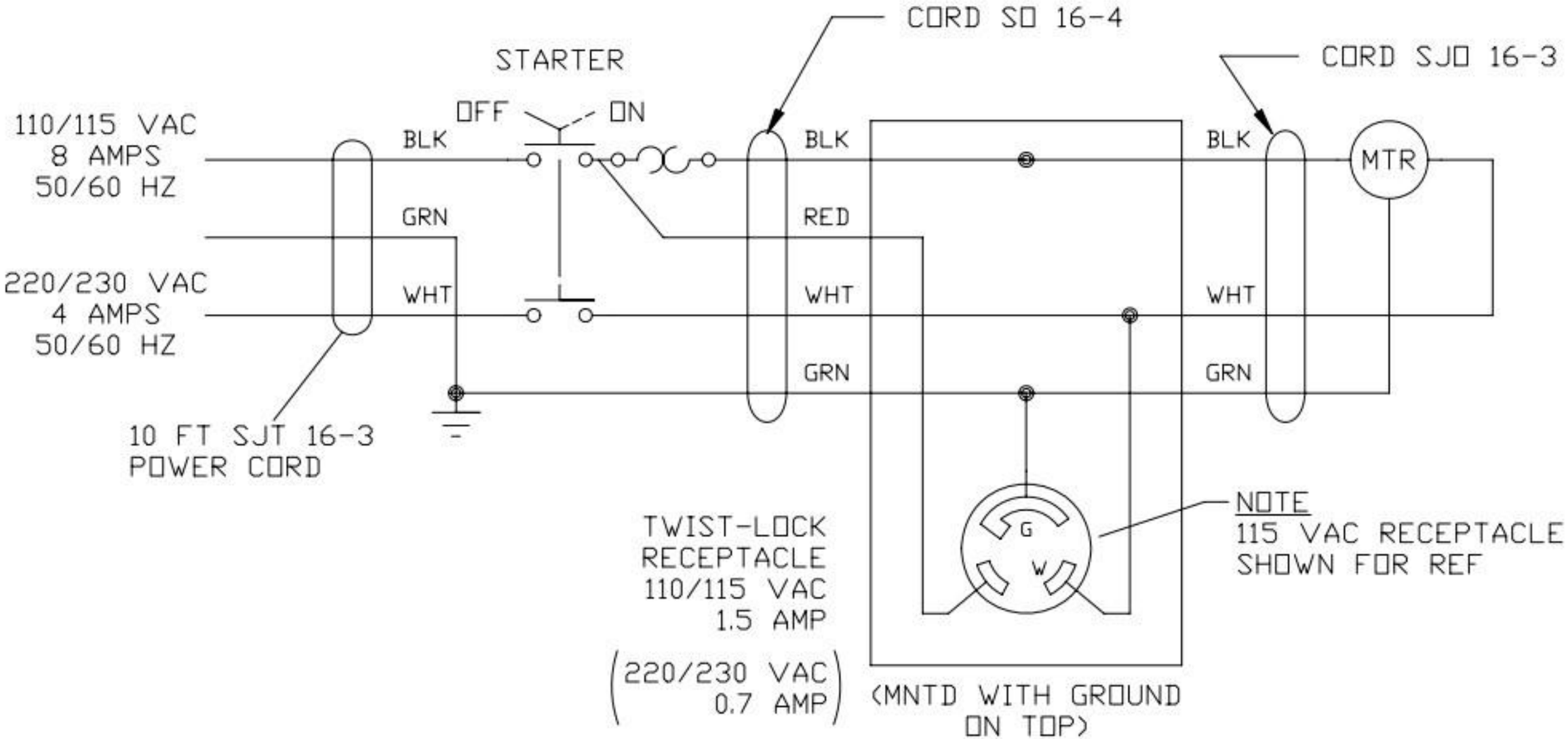
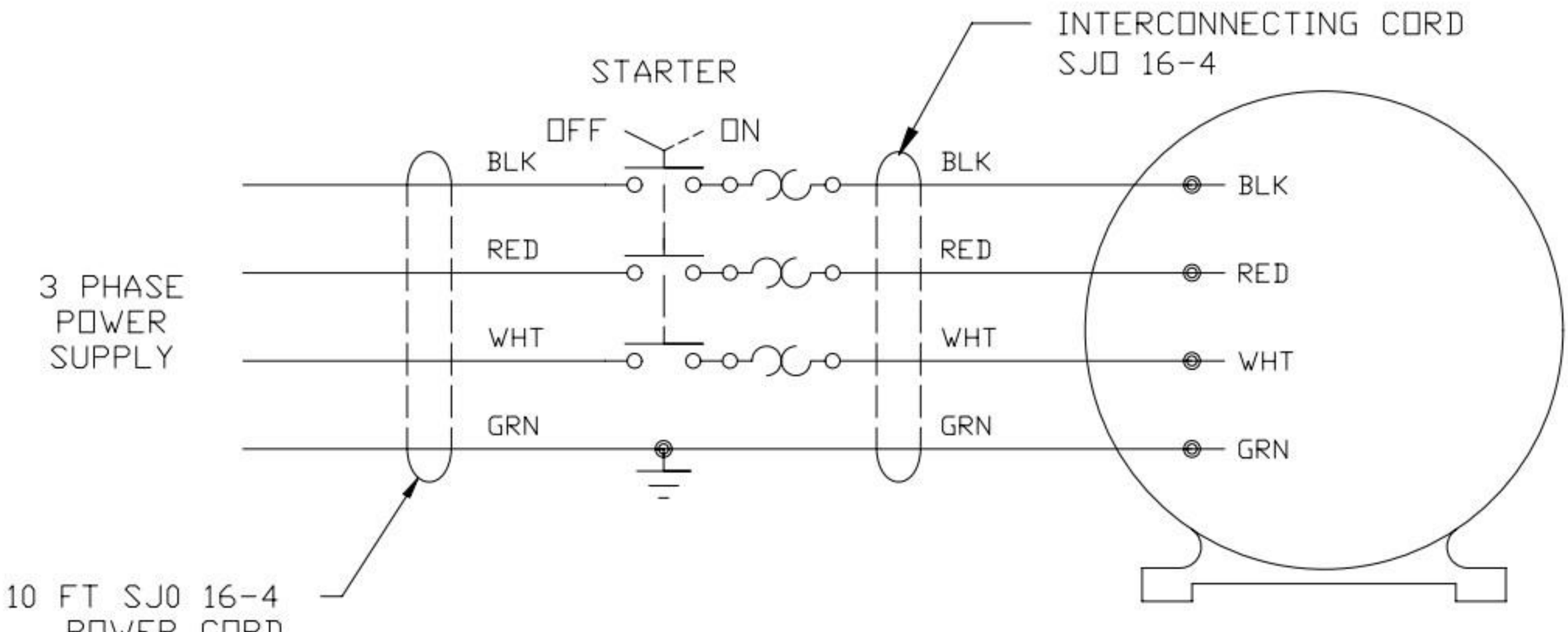
Wiring Diagram (Three Phase)