NDE550 & NDE650 SERVICE PARTS

This parts list contains the service parts and wiring diagrams for this model. Check the model number of the machine requiring the parts to be sure that this is the correct parts list.
NDE550s and NDE650s have been made in 115 volt, 60 Hz and 230 volt 50 Hz.
Model numbers for the 115 volt models include:
NDE550AE-1A and NDE550WE-1A
NDE650AE-1A and NDE650WE-1A
Model numbers for the 230 volt models include:
NDE550AE-6A and NDE550WE-6A
NDE650AE-6A and NDE650WE-6A

Note: The liquid line filter drier listed in this parts list is designed for this refrigeration system. Premature failure may result if the wrong drier is used.

TABLE OF CONTENTS

Cabinet Assembly - NDE550 . . . . . Page 2
Cabinet Assembly - NDE650 . . . . . Page 3
Air Cooled Refrigeration . . . . . Page 4
Water Cooled Refrigeration . . . . . Page 5
Ice Dispensing . . . . . Page 6
Evaporator . . . . . Page 7
Gearmotor Assembly . . . . . Page 8
Control Box . . . . . Page 9
Water System . . . . . Page 10
Kits . . . . . Page 11
Wiring Diagrams . . . . . Page 12

NDE550 & NDE650 SERVICE PARTS

NDE550 Cabinet Assembly

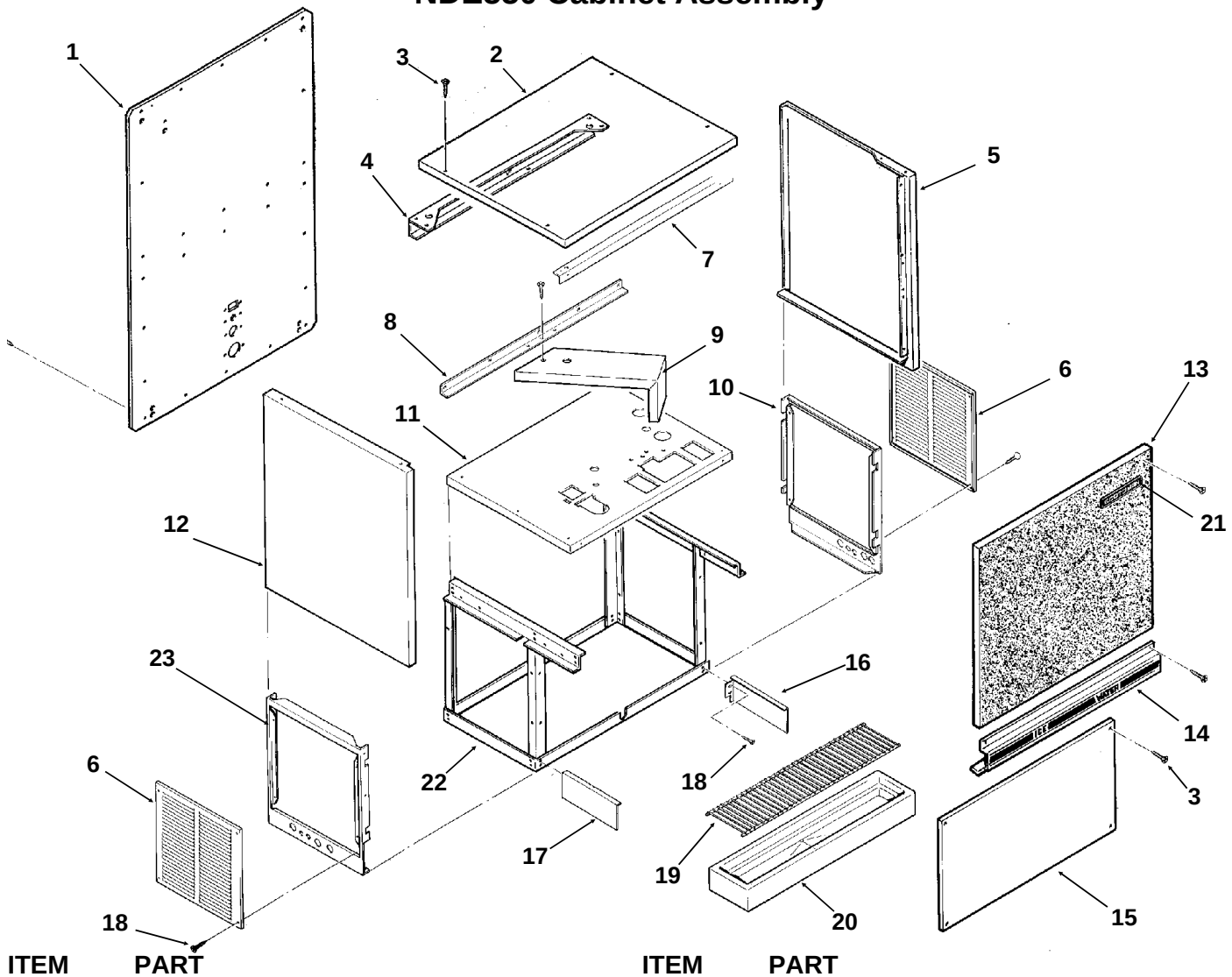

ITEM NUMBER	PART NUMBER	DESCRIPTION
1	A32954-001	Back Panel, sandalwood
	A32954-015	Back panel, gray
	A32954-002	Back Panel, stainless
2	A32948-001	Top Panel, sandalwood
	A32948-015	Top panel, gray
	A32948-002	Top Panel, stainless
3	03-1419-16	Panel screw
4	A32938-015	Hanger Brace - gray
5	A32947-003	Rt. side panel, sandalwood
	A32947-016	Right side panel, gray
	A32947-004	Rt. side panel, stainless
6	A33113-001	Service panel, sandalwood
	A33113-015	Service panel, gray
	A33113-002	Service panel, stainless
7	A32939-015	Front brace - gray
8	A32940-015	Support angle - gray
9	A32949-015	Gearmotor Support - gray
10	A32953-001	Rt. side lower, sandalwood
	A32953-015	Right side lower, gray
	A32953-002	Rt. side lower, stainless

ITEM NUMBER	PART NUMBER	DESCRIPTION
11	A32956-015	Upper plate assembly gray
12	A32947-001	Lt. side panel, sandalwood
	A32947-015	Left side panel, gray
	A32947-002	Lt. side panel, ss
13	A32946-001	Up front panel, sandalwood
	A32946-002	Upper front panel, gray
	A34393-001	Up front panel, stainless
14	A33198-001	Control panel assembly
15	A32944-001	Lower front panel
16	A34917-015	RH sink support gray
17	A34917-015	LH sink support gray
18	03-1405-17	Screw
19	02-2951-01	Grill
20	02-2944-01	Sink, brown
	02-2944-02	Sink, gray
21	15-0808-01	Emblem
22	A32958-001	Lower frame assy
23	A32952-001	Lt side lower, sandalwood
	A32952-015	Left side lower, gray
	A32952-002	Lt side lower, stainless

NDE550 & NDE650 SERVICE PARTS

NDE650 Cabinet

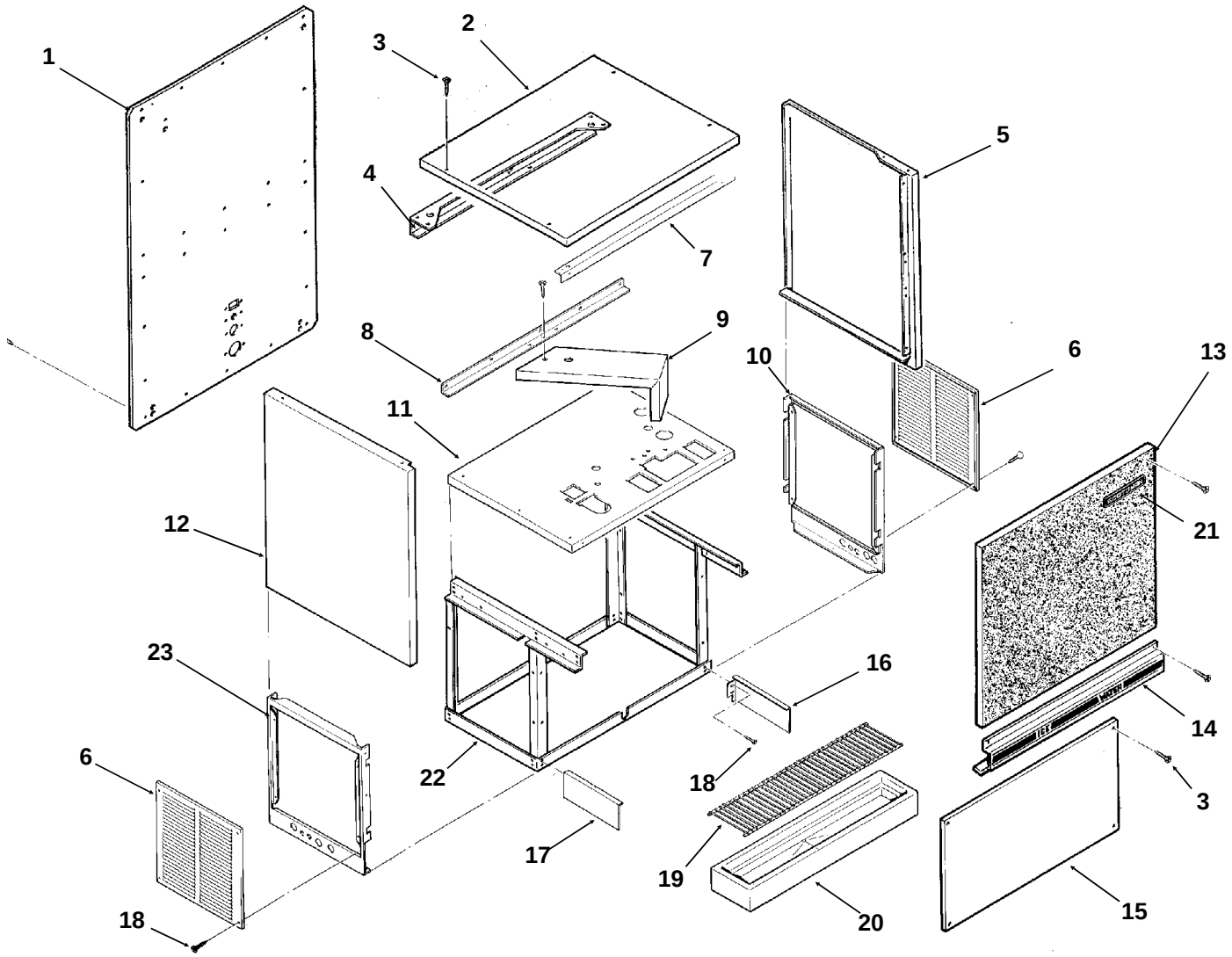

ITEM NUMBER	PART NUMBER	DESCRIPTION
1	A33112-001	Back Panel, sandalwood
	A33112-015	Back panel, gray
	A33112-002	Back Panel, stainless
2	A32948-001	Top Panel, sandalwood
	A32948-015	Top panel, gray
	A32948-002	Top Panel, stainless
3	03-1419-16	Panel screw
4	A32938-015	Hanger Brace gray
5	A33109-003	Rt. side panel, sandalwood
	A33109-016	Right side panel, gray
	A33109-004	Rt. side panel, stainless
6	A33113-001	Service panel, sandalwood
	A33113-015	Service panel, gray
	A33113-002	Service panel, stainless
7	A32939-015	Front Brace gray
8	A32940-015	Support angle gray
9	A33107-015	Gearmotor Support gray
10	A32953-001	Rt. side lower, sandalwood
	A32953-015	Right side lower, gray
	A32953-002	Rt. side lower, stainless

ITEM NUMBER	PART NUMBER	DESCRIPTION
11	A32956-015	Upper plate assembly gray
12	A33109-001	Lt. side panel, sandalwood
	A33109-015	Left side panel, gray
	A33109-002	Lt. side panel, ss
13	A33108-001	Up front panel, paint
	A33108-002	Upper front panel, gray
	A34394-001	Up front panel, stainless
14	A33198-001	Control panel assembly
15	A32944-001	Lower front panel
16	A34917-015	RH sink support gray
17	A34917-015	LH sink support gray
18	03-1405-17	Screw - Hex cap
19	02-2951-01	Grill
20	02-2944-01	Sink, brown
	02-2944-02	Sink, gray
21	15-0808-01	Emblem
22	A32958-001	Lower frame assy
23	A32952-001	Lt side lower, sandalwood
	A32952-015	Left side lower, gray
	A32952-002	Lt side lower, stainless

NDE550 & NDE650 SERVICE PARTS
Air Cooled Refrigeration

ITEM NUMBER	PART NUMBER	DESCRIPTION
1	A32961-020	Insulation Kit (3 piece)
2	11-0488-21	Thermo Expansion Valve
3	no number	Suction Line
4	A33194-020	Evaporator
5	03-1420-03	Screw
6	18-8720-21	Compressor, 115v, 60 Hz
	18-5700-50	Overload for 115v comp.
	18-8720-26	Compressor, 230v, 50 Hz
	18-5700-55	Overload for 230v comp.
7	03-1406-10	Hex nut
8	02-3319-02	Dryer
9	18-2200-27	Mounting Sleeve
10	18-2200-28	Mounting Grommet
11	18-8736-02	Fan Motor, 115v 60 Hz
	18-8736-03	Fan motor, 230v, 50 Hz
12	18-0422-00	Fan bracket stand type
12a	02-3359-01	Fan motor bracket; mounts to condenser shroud.
13	11-0447-20	Low Pressure Cont.
14	18-8738-01	Fan Blade
15	A33110-015	Fan Shroud gray
16	18-8731-01	Condenser
17	03-1645-01	Screw
18	16-0832-20	Access valve
	16-0832-02	Stem cap
	16-0832-20	Access valve
19	11-0485-22	Hi Press. Cut Out

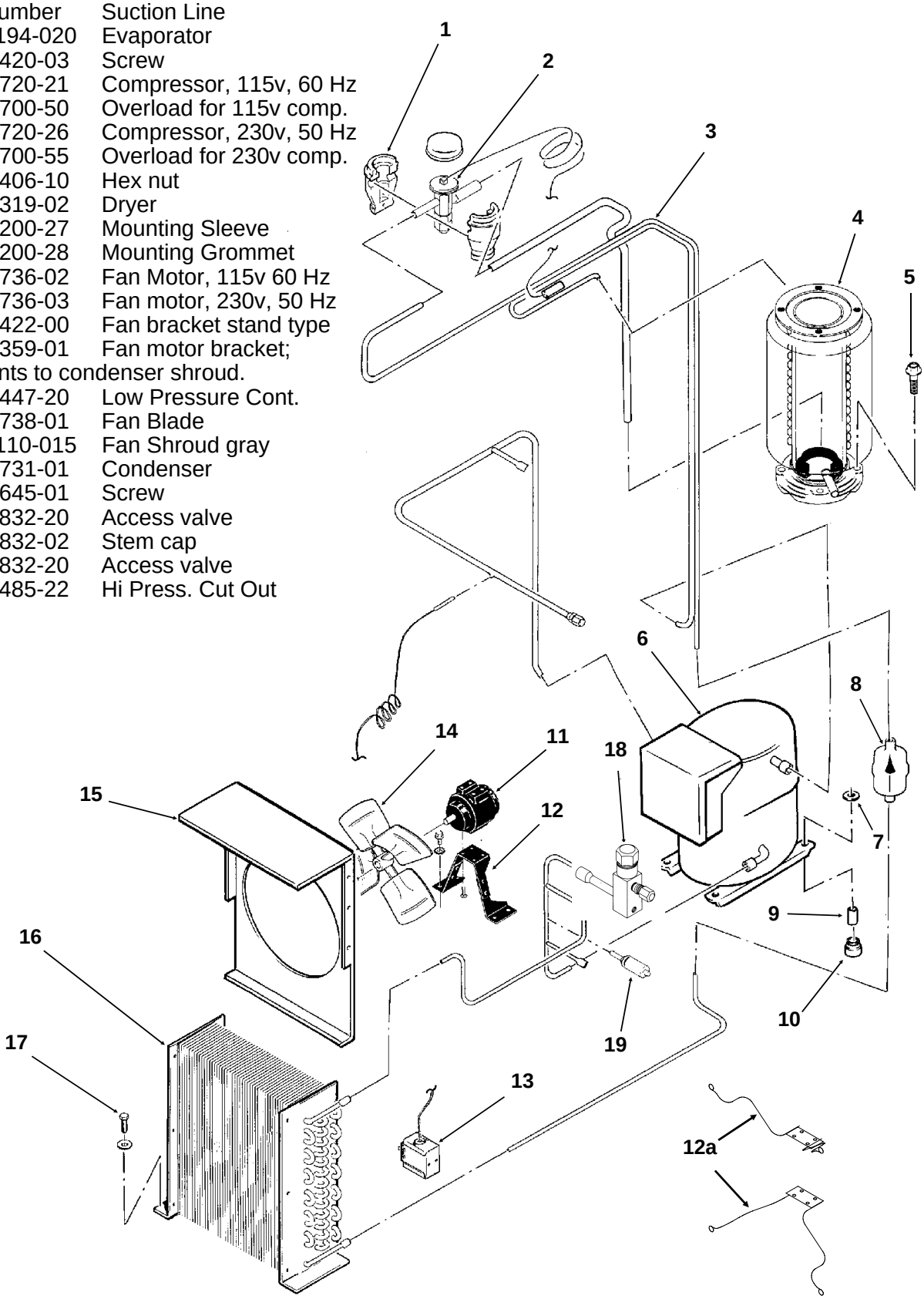

NDE550 & NDE650 SERVICE PARTS
Water Cooled Refrigeration

ITEM NUMBER	PART NUMBER	DESCRIPTION
1	A32961-020	Insulation Kit (3 piece)
2	11-0488-21	Thermo Exp. Valve
3	no number	Suction Line
4	A33194-020	Evaporator
5	03-1420-03	Screw
6	02-3319-02	Dryer
7	03-1406-10	Hex Nut
8	18-2200-27	Mounting Sleeve
9	18-2200-28	Mounting Grommet
10	18-8720-21	Compressor, 115v 60 Hz
	18-5700-50	Overload for 115v comp.
	18-8720-26	Compresor, 230v, 50 Hz
	18-5700-55	Overload for 230v comp.
11	16-0832-20	Access valve
12	11-0485-22	High Press. Cut Out
13	11-0478-01	Water Reg. Valve
14	11-0447-20	Low Press. Control
15	A31828-001	Adaptor Flange
16	03-1405-17	Screw
17	03-1410-03	Lock washer
18	18-3305-25	Condenser
19	A31828-002	Adaptor Flange

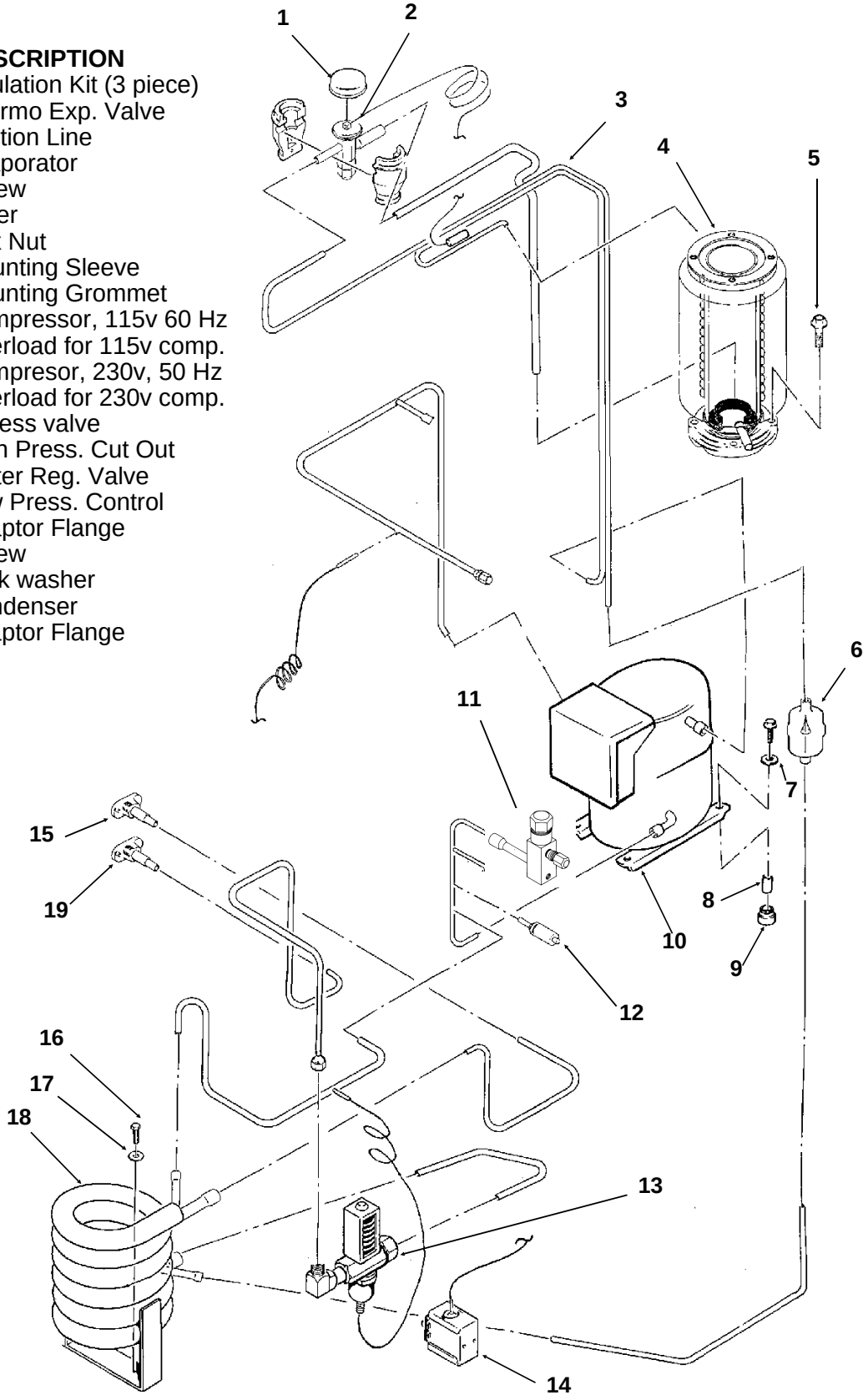

NDE550 & NDE650 SERVICE PARTS
Ice Dispensing

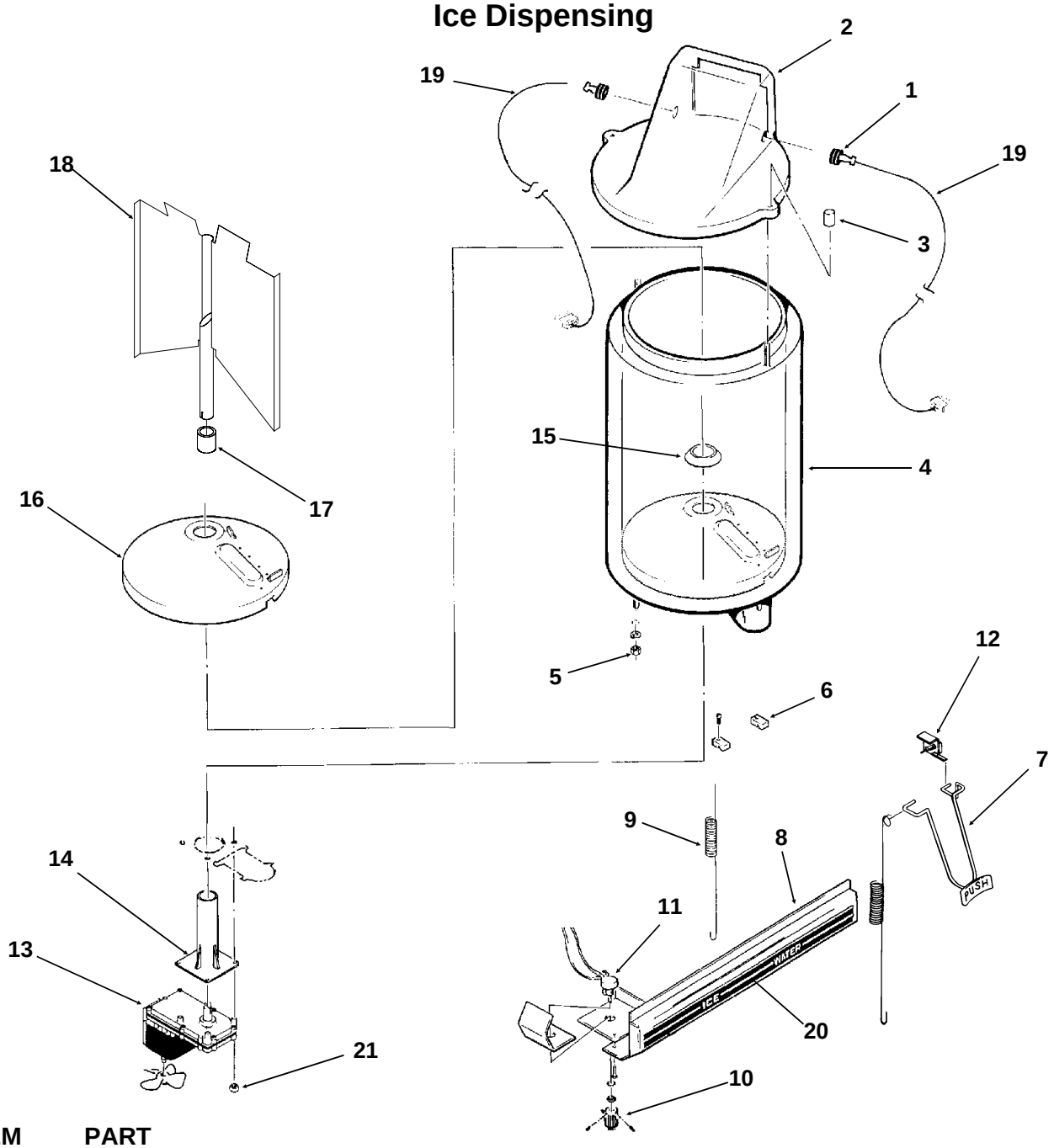

ITEM NUMBER	PART NUMBER	DESCRIPTION
1	13-0866-01	Grommet, Bin Control
2	A34493-003	Bin top
3	03-0255-00	Wing Nut
4	**A34496-001**	**Storage Bin NDE550**
	A34496-002	**NDE650 Storage Bin**
5	03-1406-09	Hex nut
	03-1410-03	Lock washer
6	02-2950-01	Arm Clamp
7	02-3167-01	Glass Filler Lever
8	A33198-001	Control Panel
9	02-3022-01	Spring
10	02-1810-00	Knob
11	A24258-003	Potentiometer (optional)
12	12-2409-01	Microswitch

ITEM NUMBER	PART NUMBER	DESCRIPTION
13	12-2677-21	Bin Drive Motor (115v)
	12-2677-26	Bin Drive Motor (230v)
13a	12-0675-25	Fan blade, pt of item 13
14	02-1971-00	Bracket
15	13-0747-00	Water Shed
16	A32657-001	Bin Bottom
17	02-3327-01	Bearing
18*	**A37267-001**	**NDE650 Bin vane (w/#17)**
	A37268-001	**NDE550 Bin vane (w/#17)**
19	A37710-021	Ice Level Sensor
20	15-0684-01	Ice Decal

* Use began 4/97. Only works with 12-2677 type motor (two flats on output shaft).

21	03-1403-36	Screw

NDE550 & NDE650 SERVICE PARTS

Evaporator

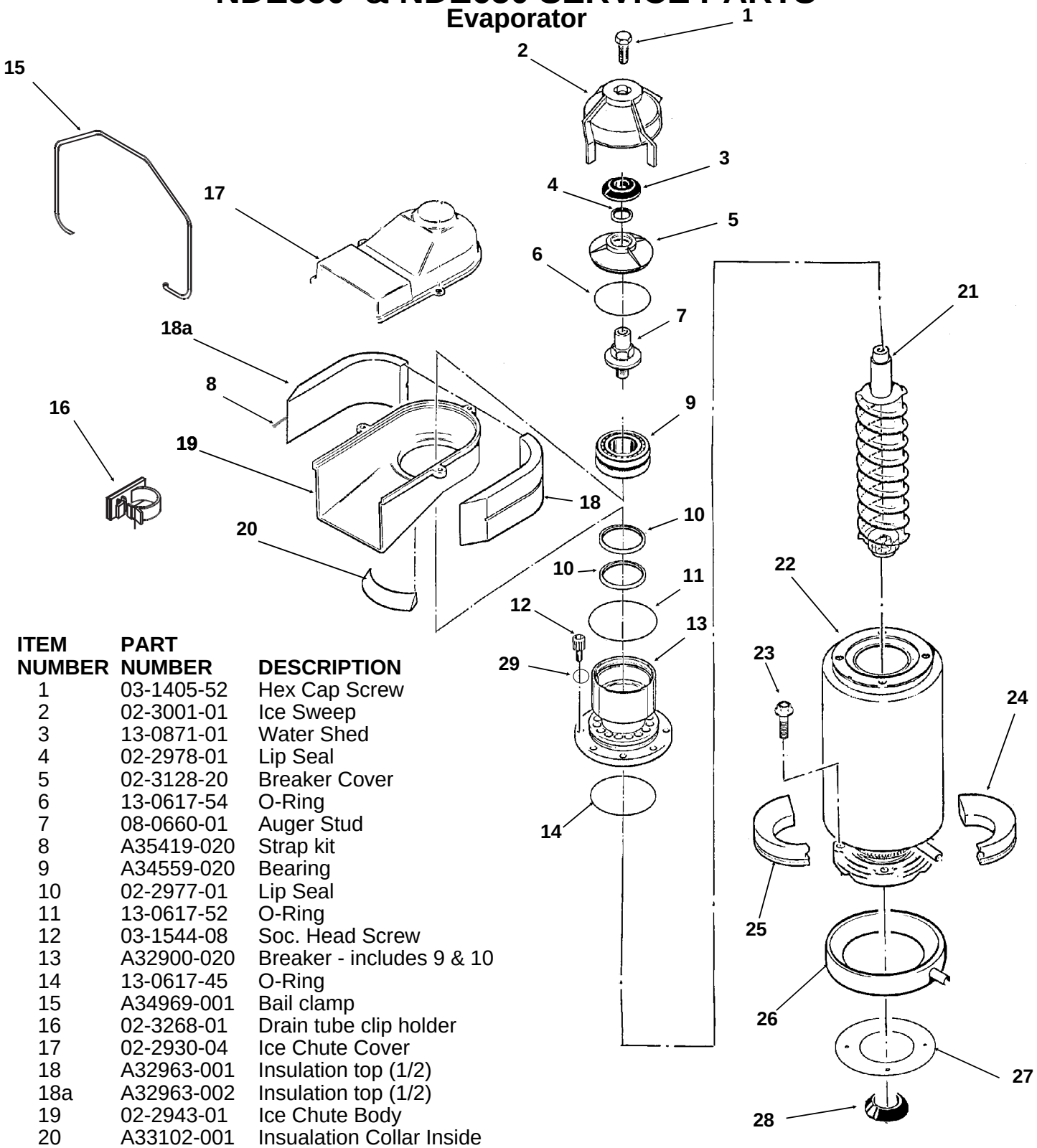

ITEM NUMBER	PART NUMBER	DESCRIPTION
1	03-1405-52	Hex Cap Screw
2	02-3001-01	Ice Sweep
3	13-0871-01	Water Shed
4	02-2978-01	Lip Seal
5	02-3128-20	Breaker Cover
6	13-0617-54	O-Ring
7	08-0660-01	Auger Stud
8	A35419-020	Strap kit
9	A34559-020	Bearing
10	02-2977-01	Lip Seal
11	13-0617-52	O-Ring
12	03-1544-08	Soc. Head Screw
13	A32900-020	Breaker - includes 9 & 10
14	13-0617-45	O-Ring
15	A34969-001	Bail clamp
16	02-3268-01	Drain tube clip holder
17	02-2930-04	Ice Chute Cover
18	A32963-001	Insulation top (1/2)
18a	A32963-002	Insulation top (1/2)
19	02-2943-01	Ice Chute Body
20	A33102-001	Insualation Collar Inside
21	A38071-021	Auger
22	A33194-020	Evaporator
23	03-1420-03	Screw
24	A32962-001	Insulation (1/2)
25	A32962-002	Insulation (1/2)
26	02-3837-01	Drip Pan
27	13-0704-00	Drip Pan Gasket
28	13-0868-01	Water Shed
29	03-1408-26	Washer

NDE550 & NDE650 SERVICE PARTS
Gearmotor Assembly

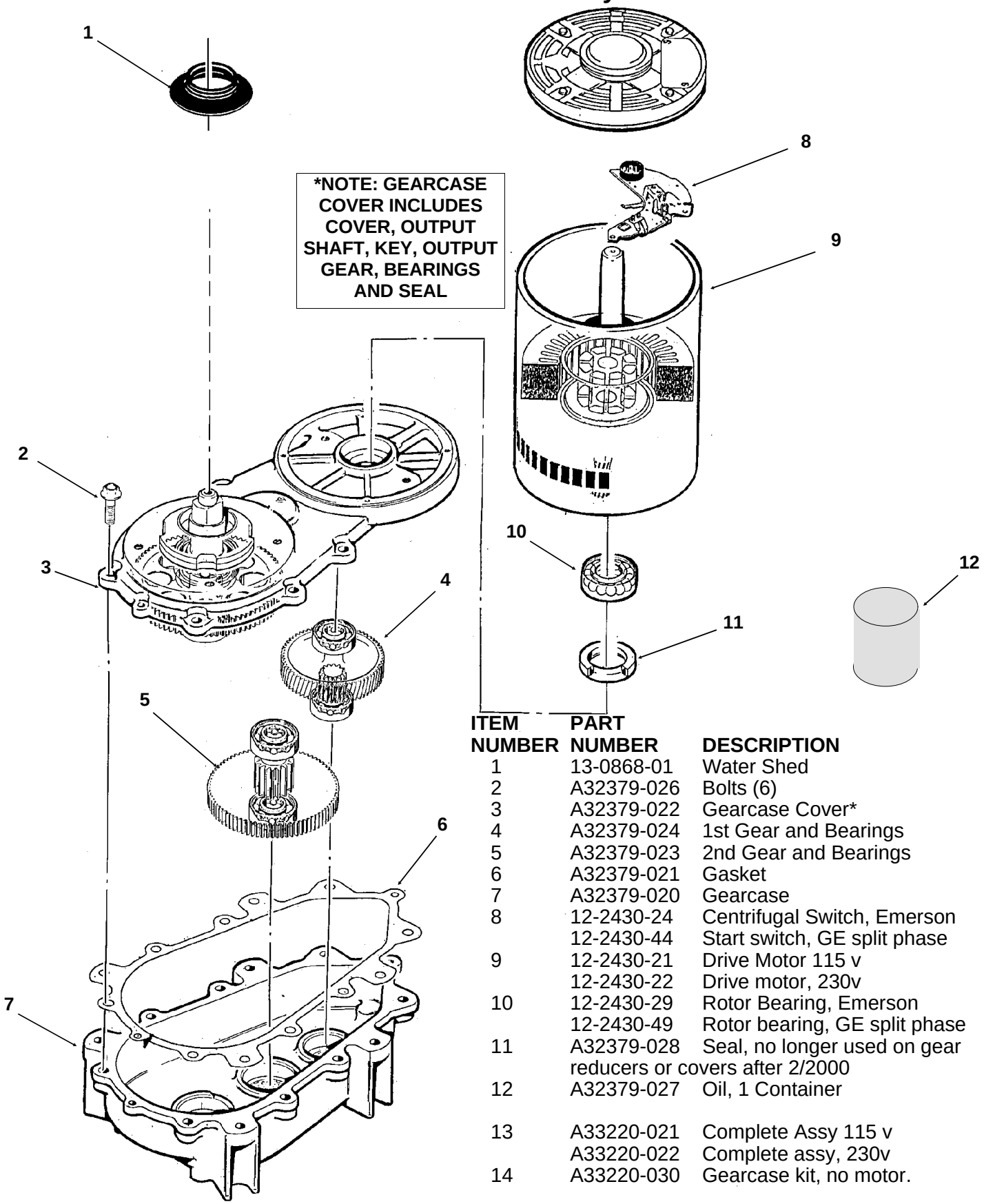

ITEM NUMBER	PART NUMBER	DESCRIPTION
1	13-0868-01	Water Shed
2	A32379-026	Bolts (6)
3	A32379-022	Gearcase Cover*
4	A32379-024	1st Gear and Bearings
5	A32379-023	2nd Gear and Bearings
6	A32379-021	Gasket
7	A32379-020	Gearcase
8	12-2430-24	Centrifugal Switch, Emerson
	12-2430-44	Start switch, GE split phase
9	12-2430-21	Drive Motor 115 v
	12-2430-22	Drive motor, 230v
10	12-2430-29	Rotor Bearing, Emerson
	12-2430-49	Rotor bearing, GE split phase
11	A32379-028	Seal, no longer used on gear reducers or covers after 2/2000
12	A32379-027	Oil, 1 Container
13	A33220-021	Complete Assy 115 v
	A33220-022	Complete assy, 230v
14	A33220-030	Gearcase kit, no motor.

NDE550 & NDE650 SERVICE PARTS
Control Box

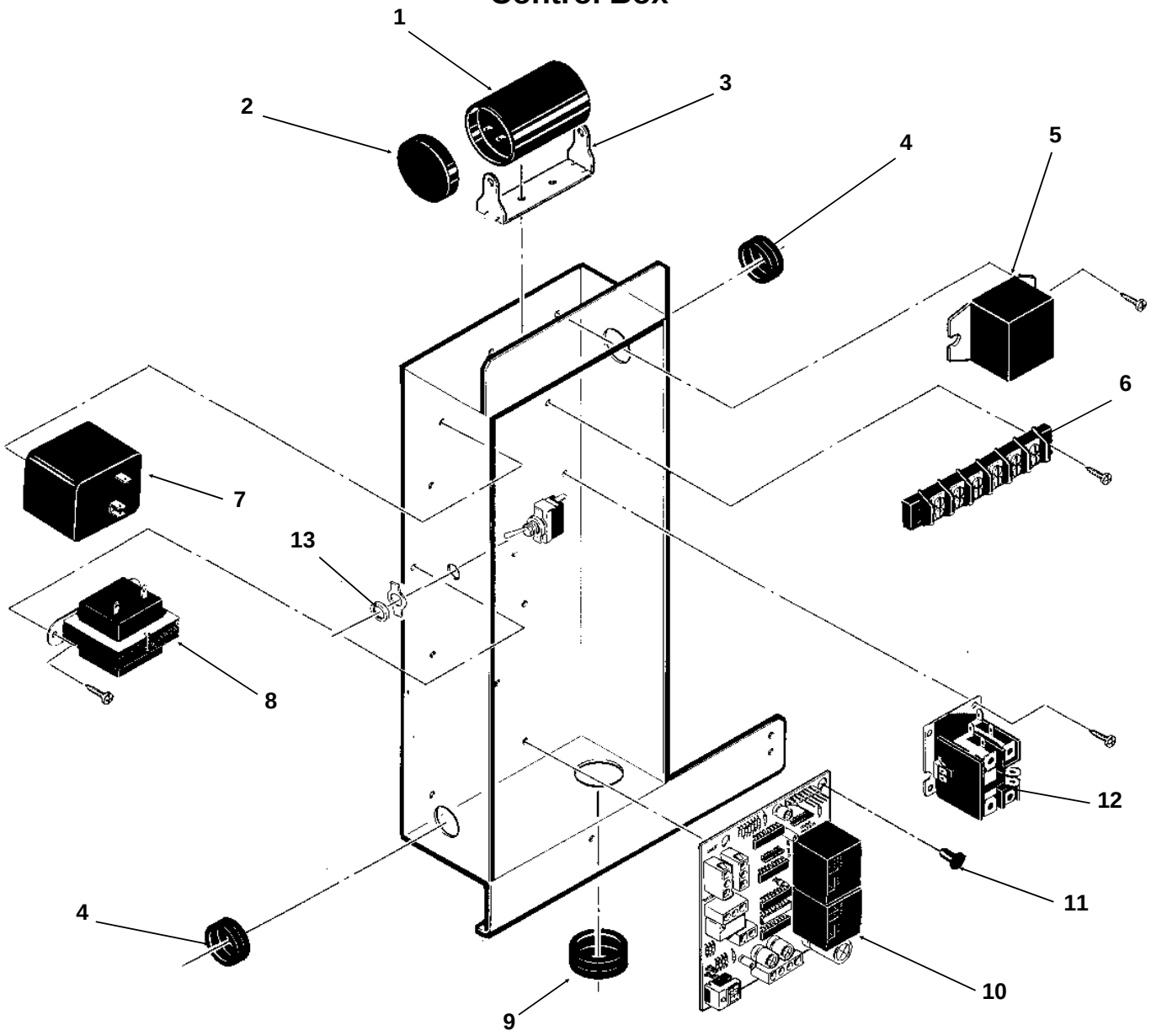

ITEM NUMBER	PART NUMBER	DESCRIPTION
1	18-1901-49	Start Capacitor, 115v 60 Hz
	18-2200-35	Start capacitor, 230v. 50 Hz
2	18-2200-38	Cap for start capacitor
3	18-2200-39	Start Cap. Bracket
4	12-1213-10	Bushing
5	A27857-001	Time Delay Relay
6	12-0813-03	Terminal Strip
7	18-1903-44	Potential Relay, 115v, 60 Hz
	18-1903-48	Current Relay, 230v, 50 Hz
8	12-2285-21	Transformer, 115v
	12-2285-22	Transformer, 230v
9	12-1213-12	Bushing
10	A37750-021	Circuit Board
11	12-2350-01	Standoff
13	12-0426-01	Switch
12	12-2469-03	Contactor, 115v, 60 Hz
	12-2469-02	Contactor, 230v, 50 Hz
NOT ILLUSTRATED:		
14	12-2337-05	Plug Assembly, Circuit Board to Low Pressure Control
15	12-2340-01	Plug Assembly, Circuit Board to Transformer
16	12-2391-01	Lockswitch for -1AG (Government Units)
17	A33127-001	Control Box Cover
Not shown, but below control box:		
18	18-1902-52	Run capacitor, 115v, 60 Hz

NDE550 & NDE650 SERVICE PARTS

Water System

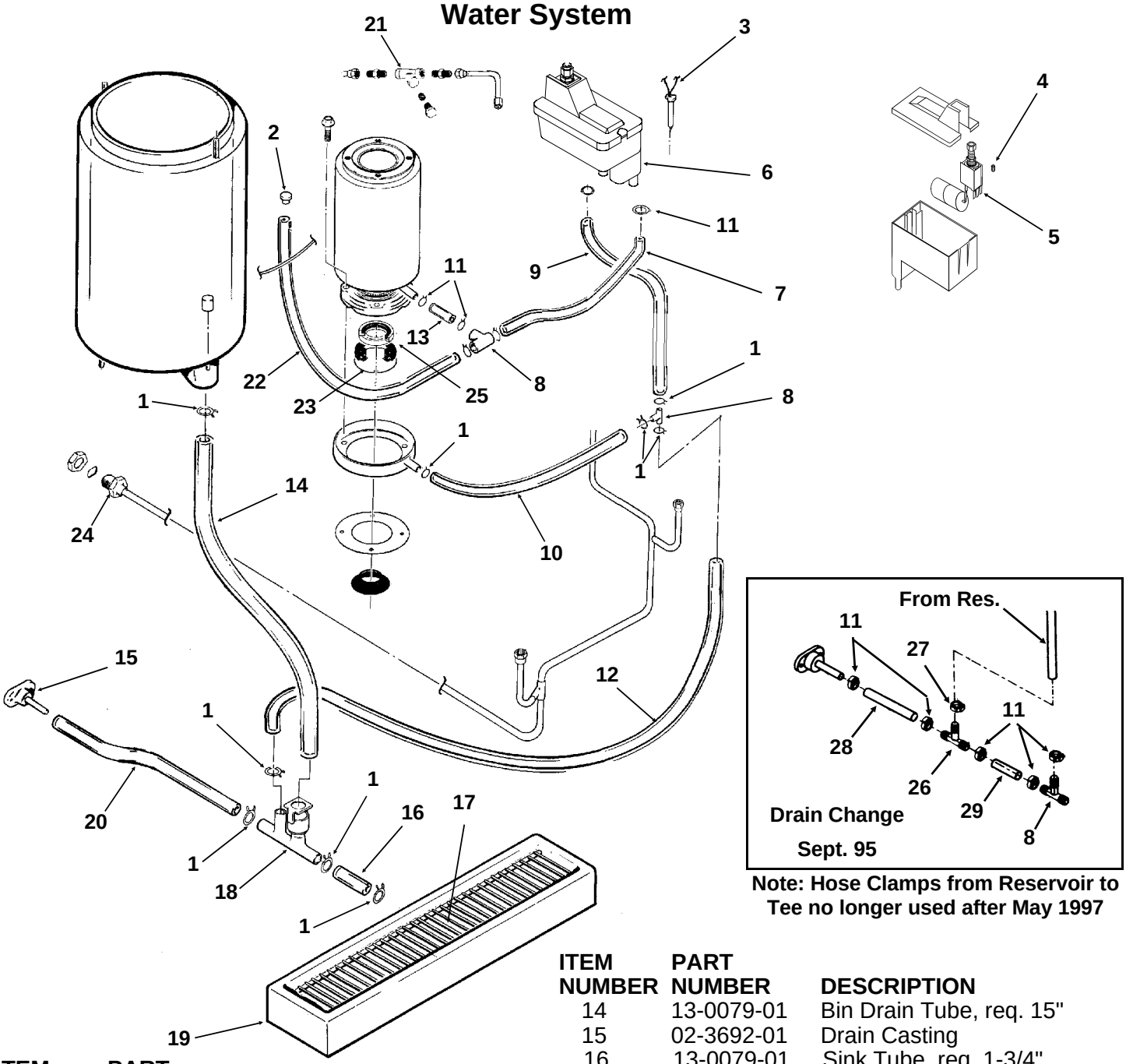

Note: Hose Clamps from Reservoir to Tee no longer used after May 1997

ITEM NUMBER	PART NUMBER	DESCRIPTION
1	02-2814-08	Clamp
2	13-0840-01	Plug
3	A33101-022	Water Level Sensor
4	02-3266-03	Plunger/seat
5	02-3266-21	Float valve
6	02-3266-20	Reservoir Assy, complete
7	13-0674-06	Tubing, requires 6"
8	16-0670-01	Tee
9	13-0079-03	Tubing, requires 4.5"
10	13-0079-03	Tubing, requires 4.5"
11	02-2814-08	Clamp
12	13-0079-03	Drain Tube, req. 36"
13	13-0674-06	Evap. Inlet Tube, req 5"
14	13-0079-01	Bin Drain Tube, req. 15"
15	02-3692-01	Drain Casting
16	13-0079-01	Sink Tube, req. 1-3/4"
17	02-2951-01	Grill
18	A36962-001	Drain Kit
19	02-2944-02	Sink
20	13-0079-01	Drain Tube, req. 8"
21	16-0162-00	Strainer
22	13-0674-06	Drain Tube, req. 23"
23	A32777-001	Retaining Ring
24	A27318-001	Inlet Fitting (only)
25	02-0929-23	Water Seal
26	16-0670-04	Tee
27	02-2814-07	Clamp
28	13-0674-01	Drain tube, 6.5" req.
29	13-0674-01	Drain tube, 2.5" req.

NDE550 & NDE650 SERVICE PARTS

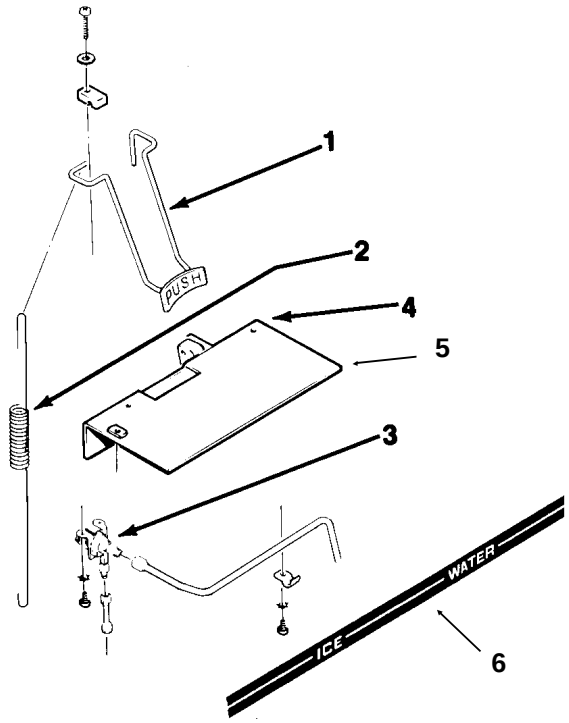

WATER GLASS FILLER

ITEM NUMBER	PART NUMBER	DESCRIPTION
1	02-3167-01	Glass filler lever
2	02-3022-01	Spring
3	12-1646-01	Solenoid Assembly (115v)
	12-1646-06	Solenoid (230v)
4	12-2409-01	Switch (mounted to base)
5	A35195-001	Valve plate
6	15-0672-01	Ice & Water label

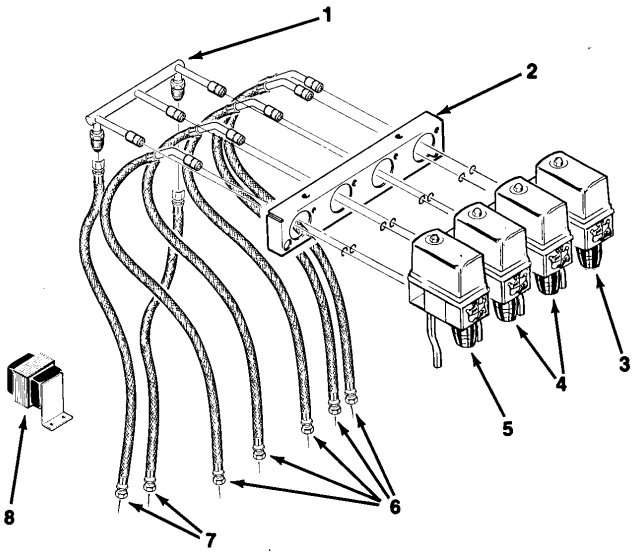

KIT: KV5H-30A ELECTRIC VALVE KIT
(for 115v models only)

ITEM NUMBER	PART NUMBER	DESCRIPTION
1	02-2128-01	Carb. Manifold Assy
2	A20368-000	Faucet Bracket
3	02-1205-19	Faucet
4	02-1205-16	Faucet
5	02-1205-17	Faucet
6	A30209-001	Syrup Line
7	A20547-000	Carb. Water Line
8	12-1809-00	Transformer

Note: Scotsman does not stock parts for valves. Determine the model of valve on your unit and order parts from:
McCann's Engineering & Mfg. Co.
2570 Colorado Blvd.
Los Angeles, CA 90039

NDE550 & NDE650 SERVICE PARTS

Wiring Diagram for units without Portion Control - 115/60/1

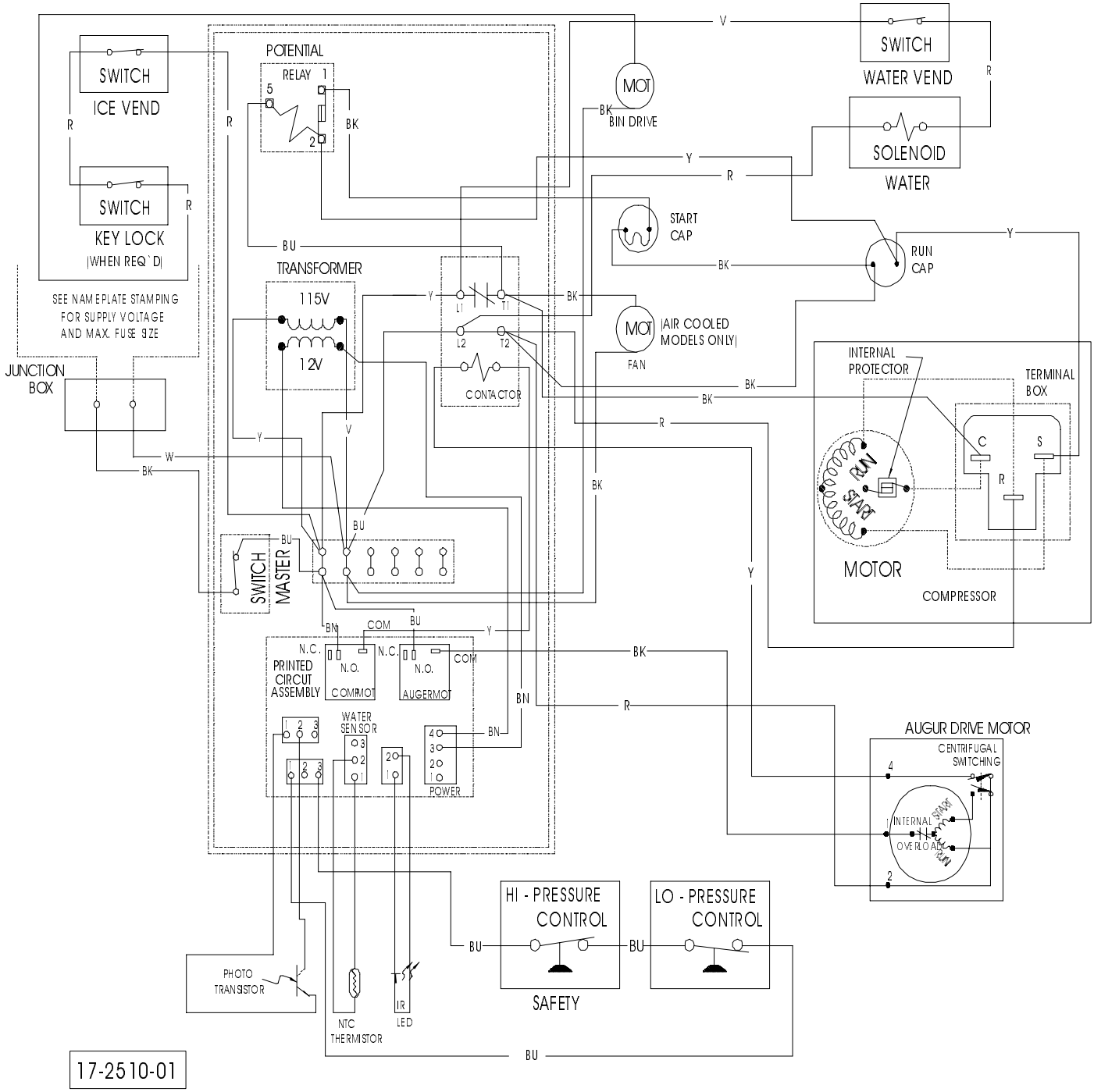

NDE550 & NDE650 SERVICE PARTS

Schematic Diagram for units without Portion Control 115/60/1

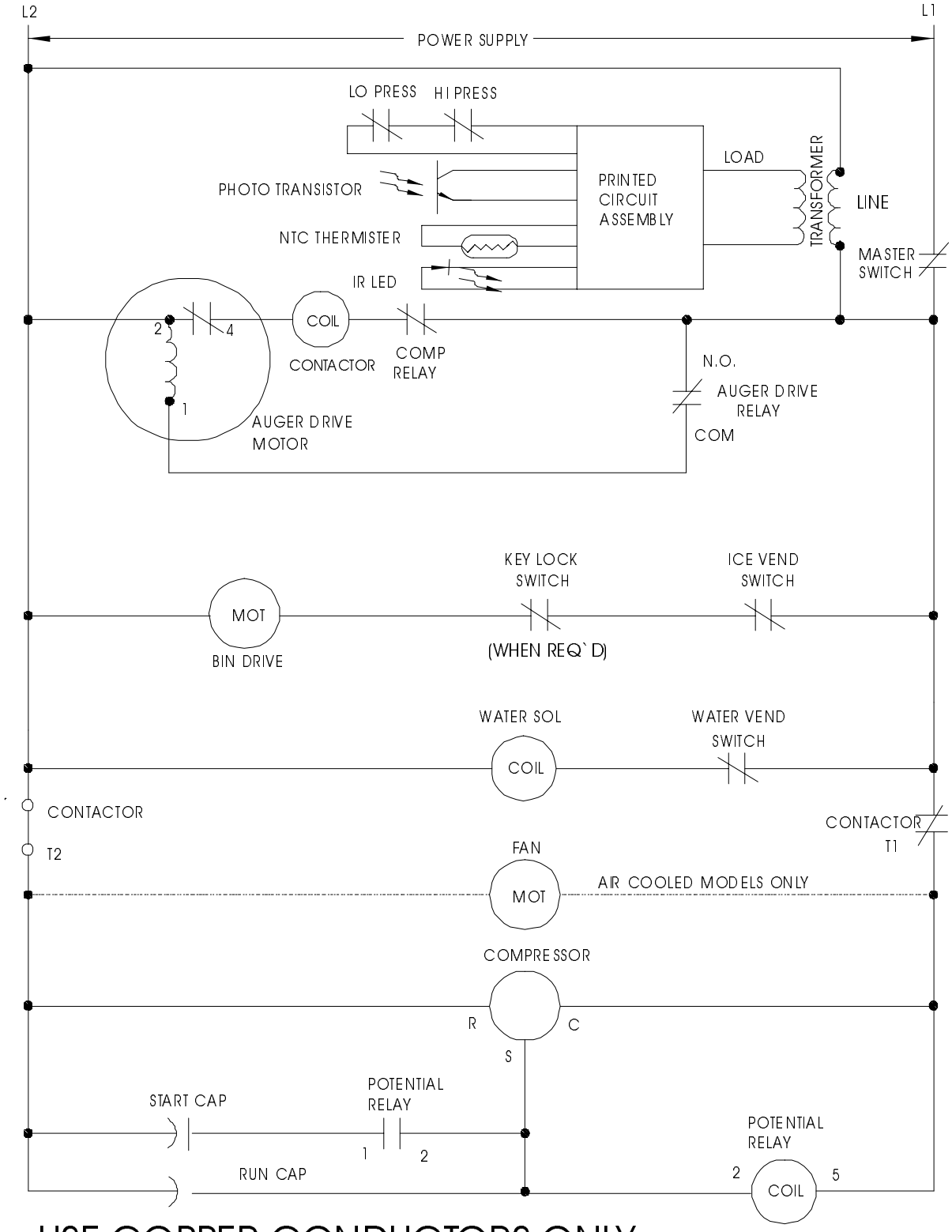

USE COPPER CONDUCTORS ONLY

THIS UNIT MUST BE GROUNDED

ALL CONTROLS SHOWN IN NORMAL ICE MAKING MODE WITH ALL DISPENSING SYSTEMS IN OPERATION.

NDE550 & NDE650 SERVICE PARTS

Wiring Diagram for units wihout Portion Control 230/50/1

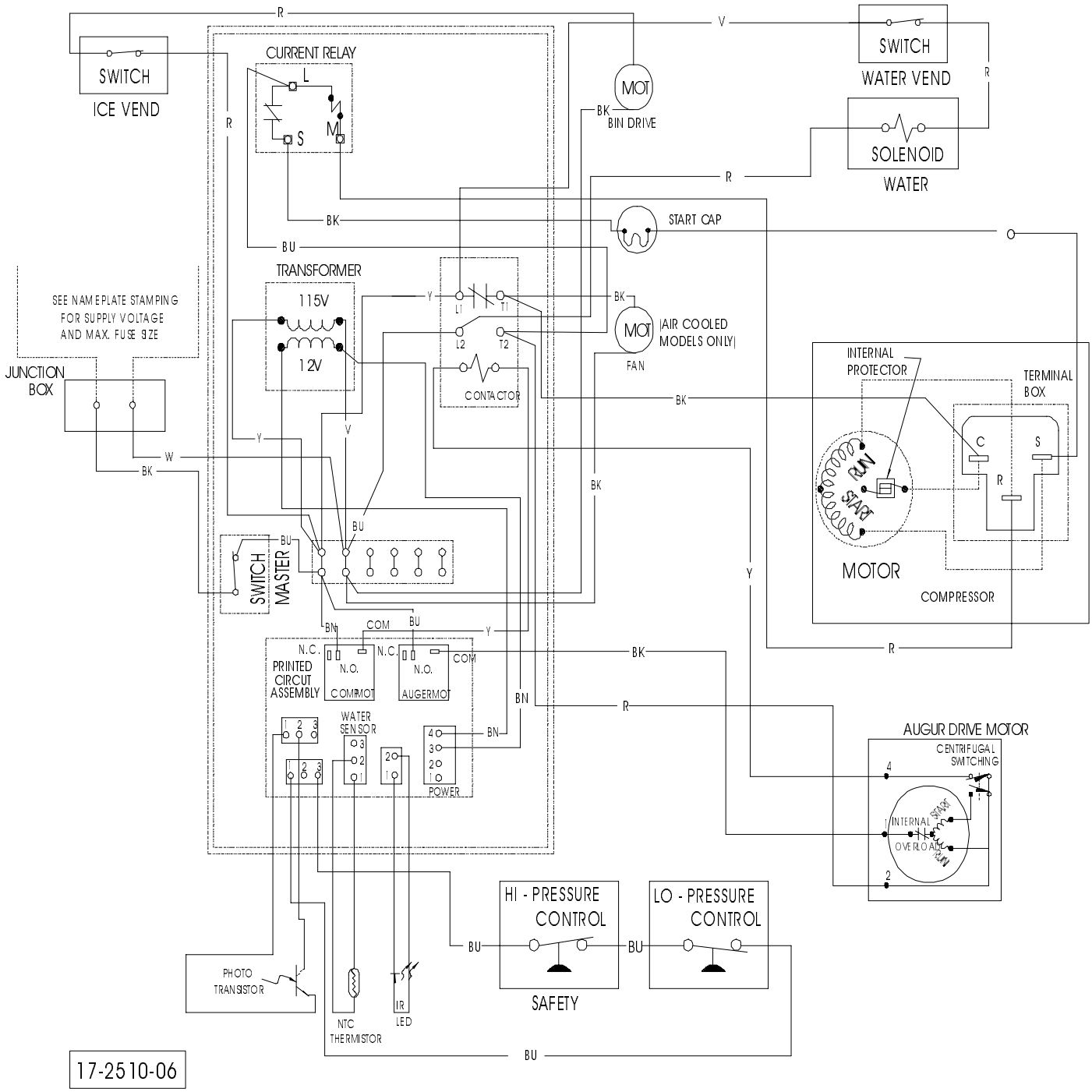

NDE550 & NDE650 SERVICE PARTS

Schematic Diagram for units without Portion Control 230/50/1

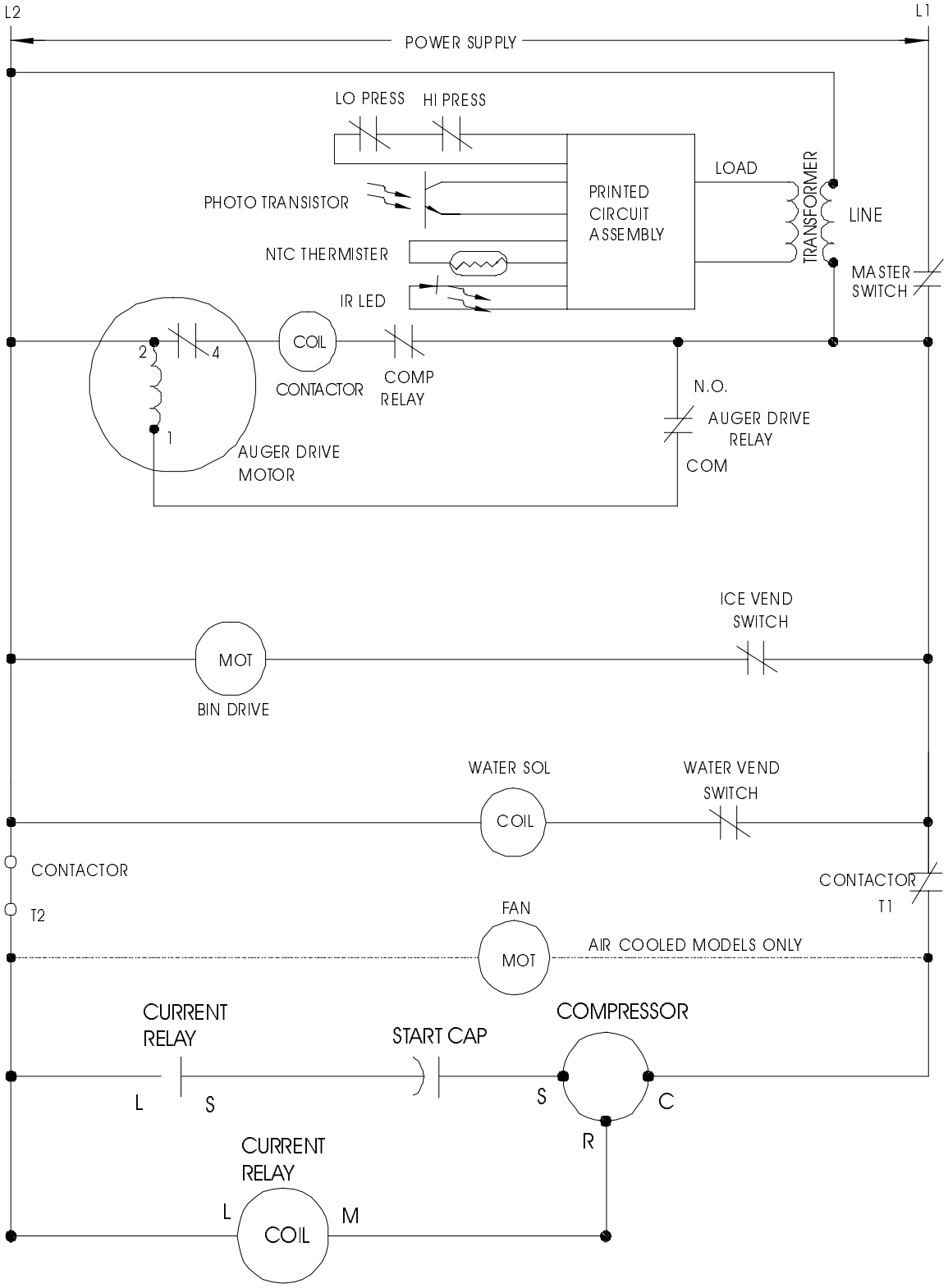

USE COPPER CONDUCTORS ONLY

THIS UNIT MUST BE GROUNDED

ALL CONTROLS SHOWN IN NORMAL ICE MAKING MODE

WITH ALL DISPENSING SYSTEMS IN OPERATION.

NDE550 & NDE650 SERVICE PARTS
NDE550 115/60/1 Wiring Diagram with Portion Control

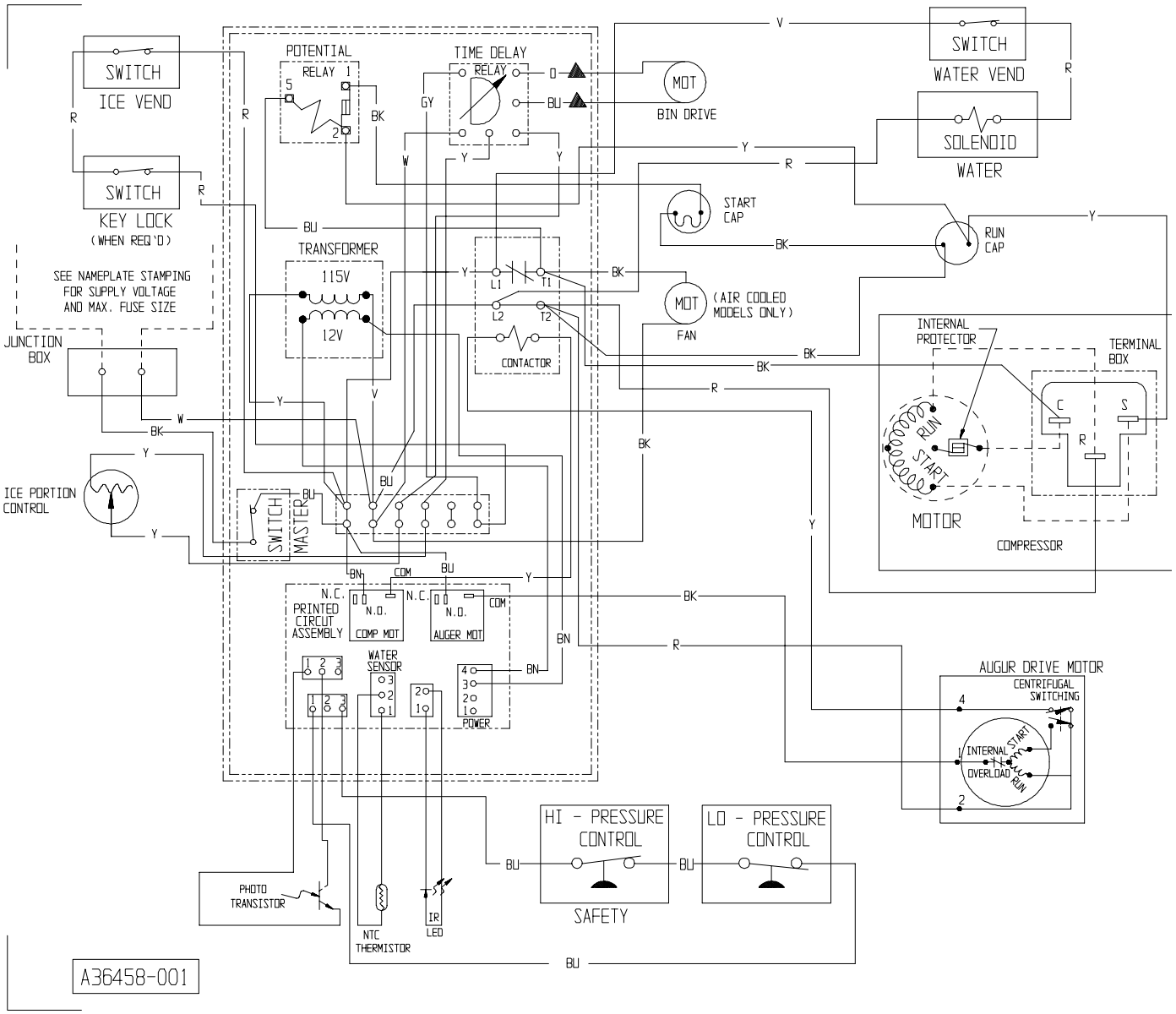

NDE550 & NDE650 SERVICE PARTS
NDE650 115/60/1 Wiring Diagram with Portion Control

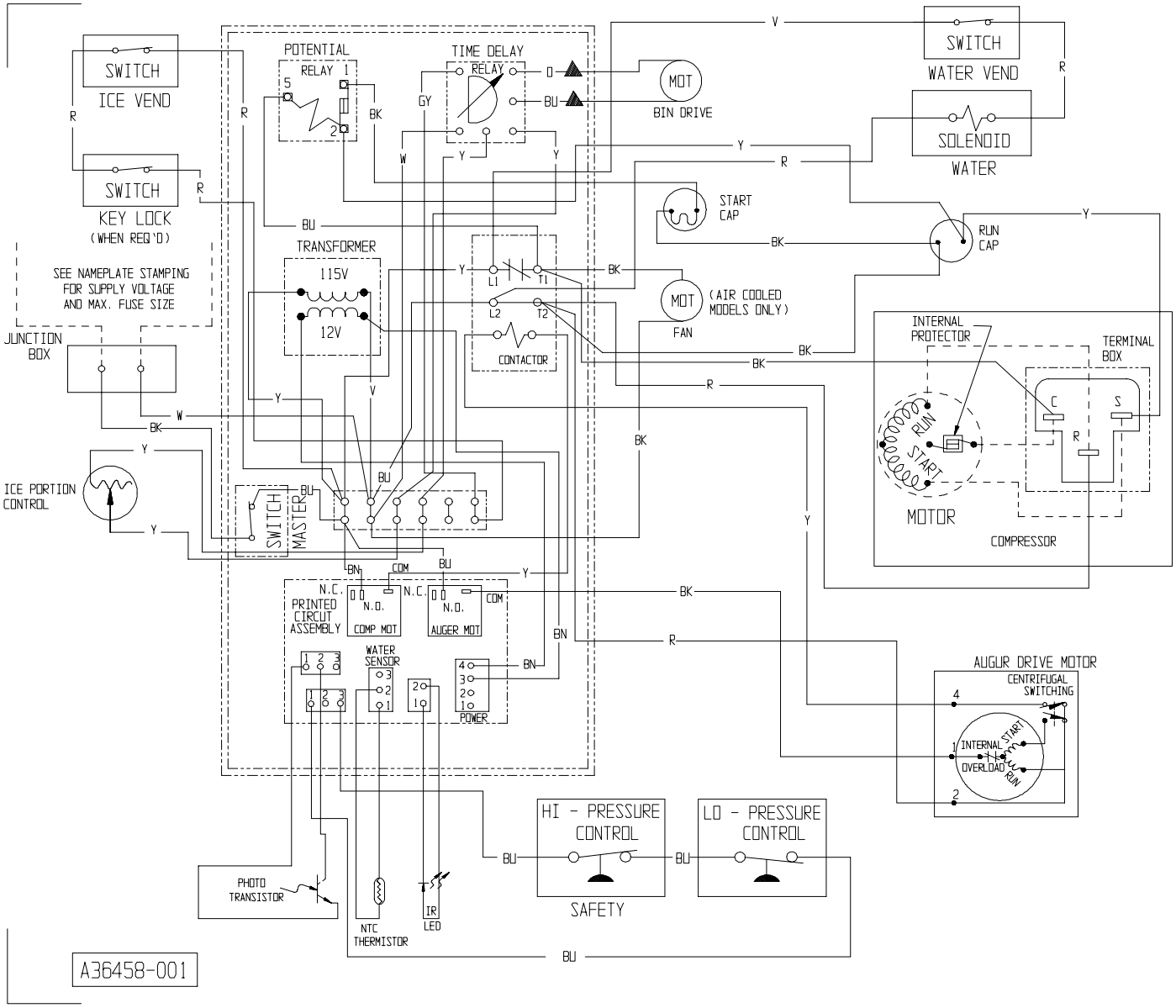

NDE550 & NDE650 SERVICE PARTS
115/60/1 Schematic Diagram with Portion Control

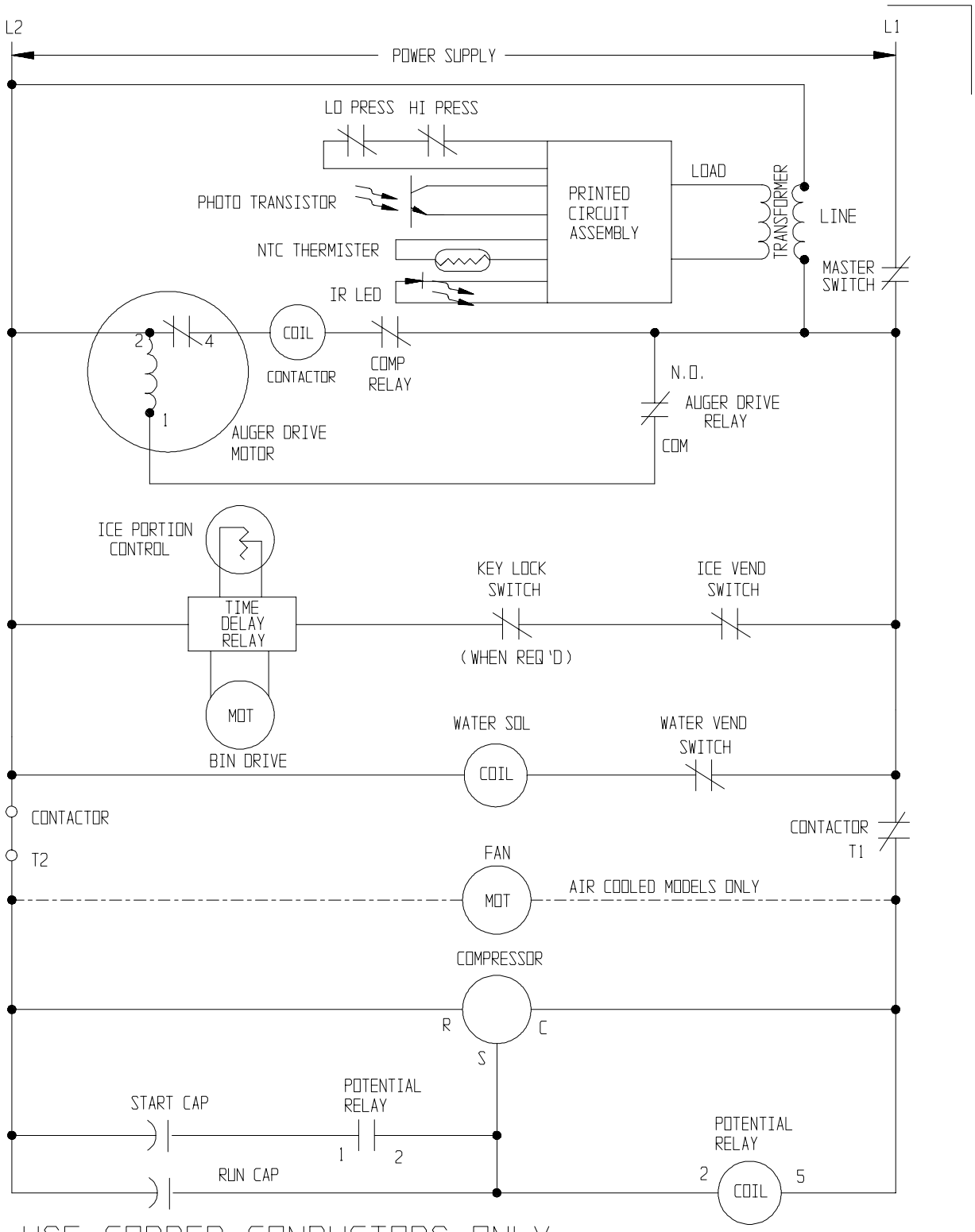

USE COPPER CONDUCTORS ONLY

THIS UNIT MUST BE GROUNDED

ALL CONTROLS SHOWN IN NORMAL ICE MAKING MODE WITH ALL DISPENSING SYSTEMS IN OPERATION.

NDE550 & NDE650 SERVICE PARTS
NDE550 230/50/1 Wiring Diagram with Portion Control

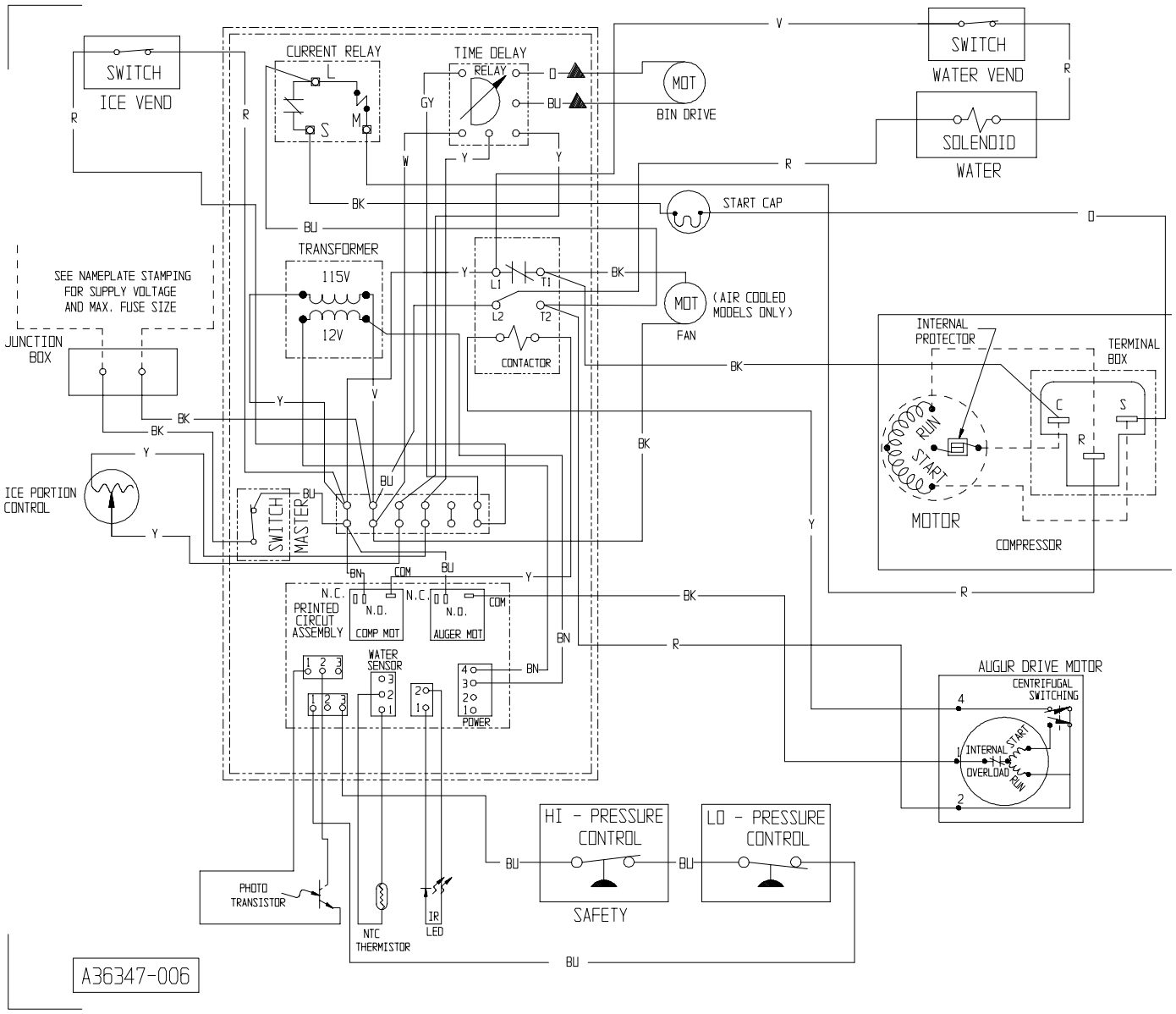

NDE550 & NDE650 SERVICE PARTS
NDE650 230/50/1 Wiring Diagram with Portion Control

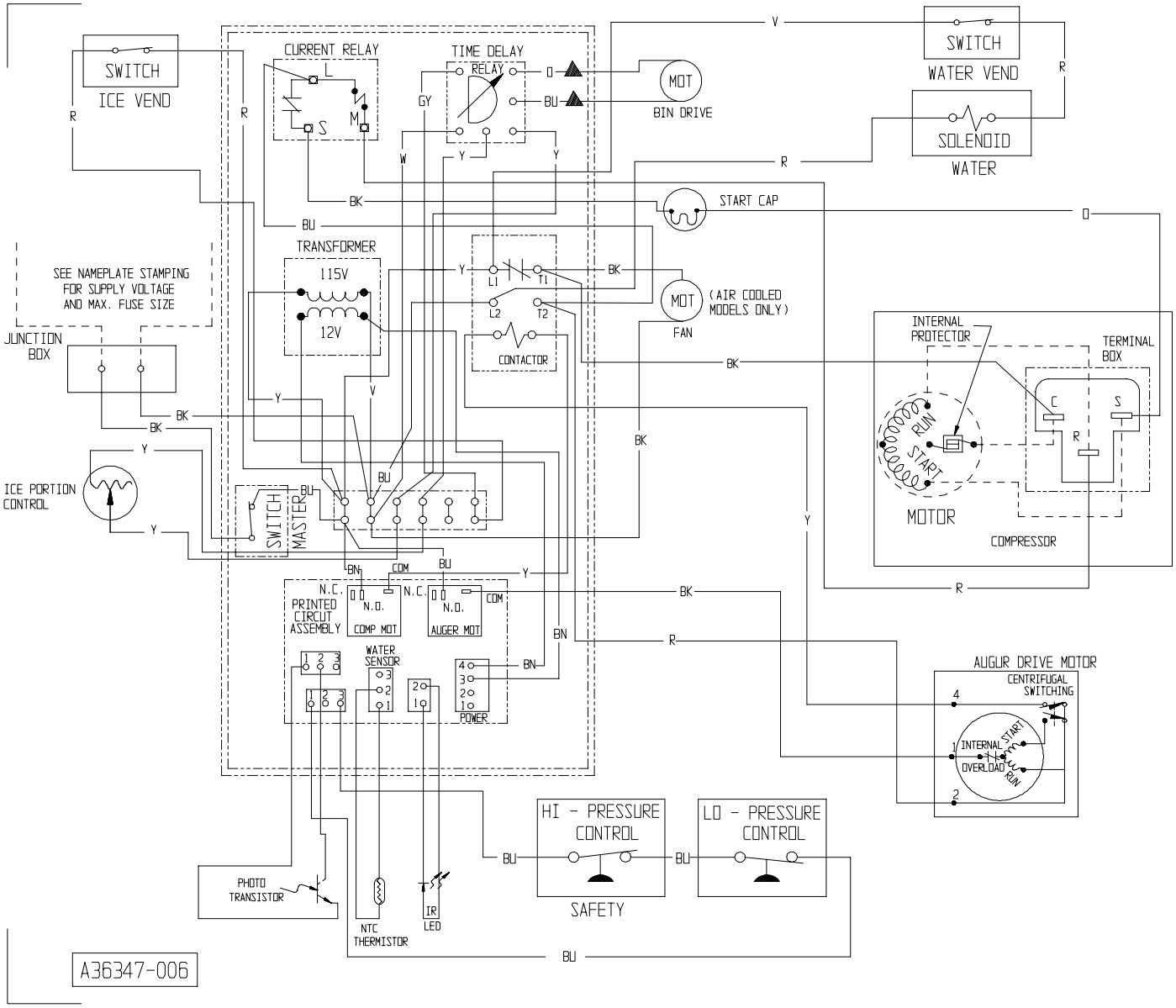

NDE550 & NDE650 SERVICE PARTS
230/50/1 Schematic Diagram with Portion Control

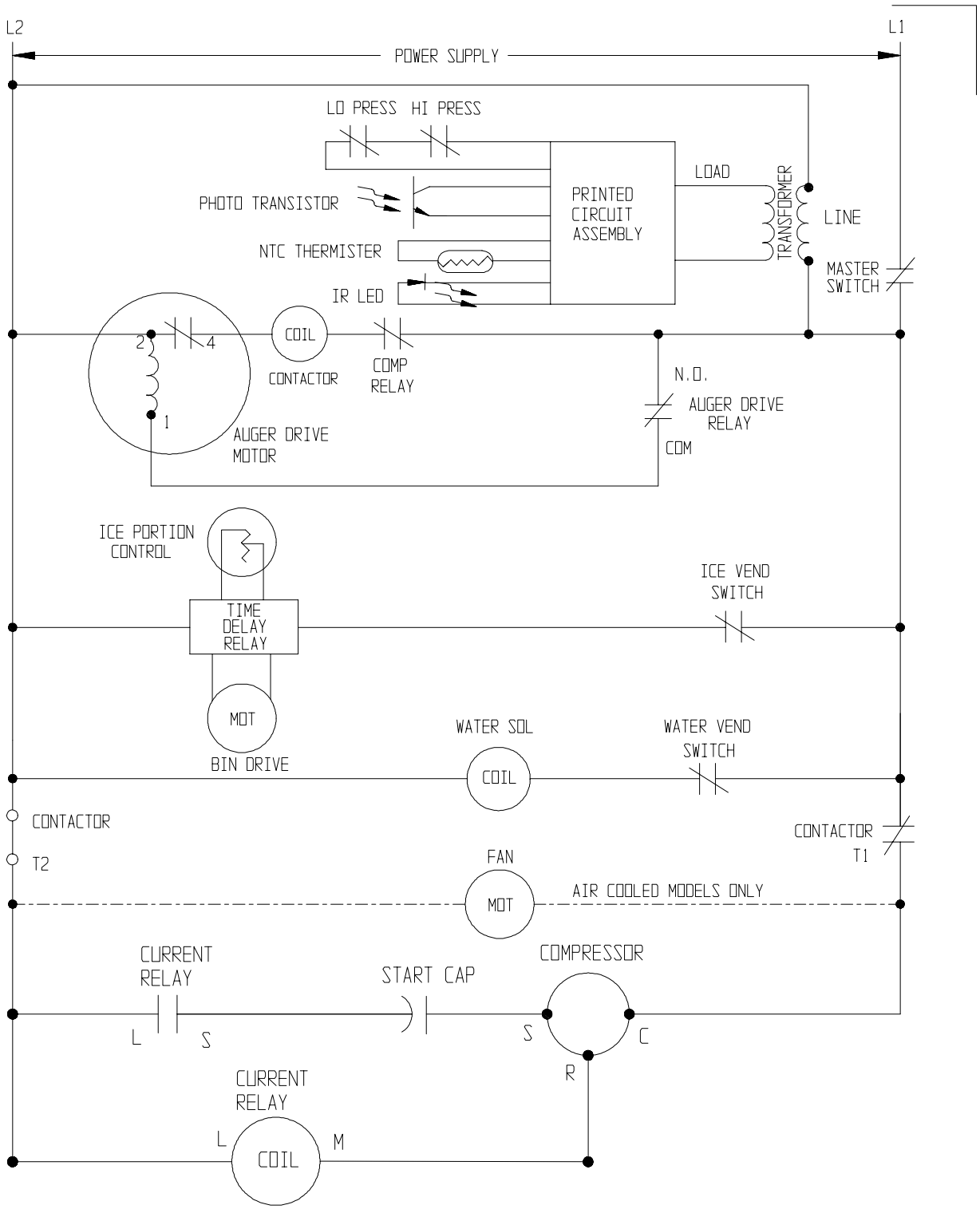

USE COPPER CONDUCTORS ONLY
THIS UNIT MUST BE GROUNDED
ALL CONTROLS SHOWN IN NORMAL ICE MAKING MODE
WITH ALL DISPENSING SYSTEMS IN OPERATION.