SERVICE PARTS LIST FOR MITSUBISHI ELECTRIC PACKAGED AIR-CONDITIONERS

Series : PURY-TMU

REVISED

Sept. 2019

BWE0204A

INDEX
PURY-80TMU PURY-100TMU

Part information update day : 2019/09/09

Please change the old catalog (issued July 2002, No.BWE02040) to this new catalog.
Content of revision : Some of parts are changed.

EXTERNAL PARTS

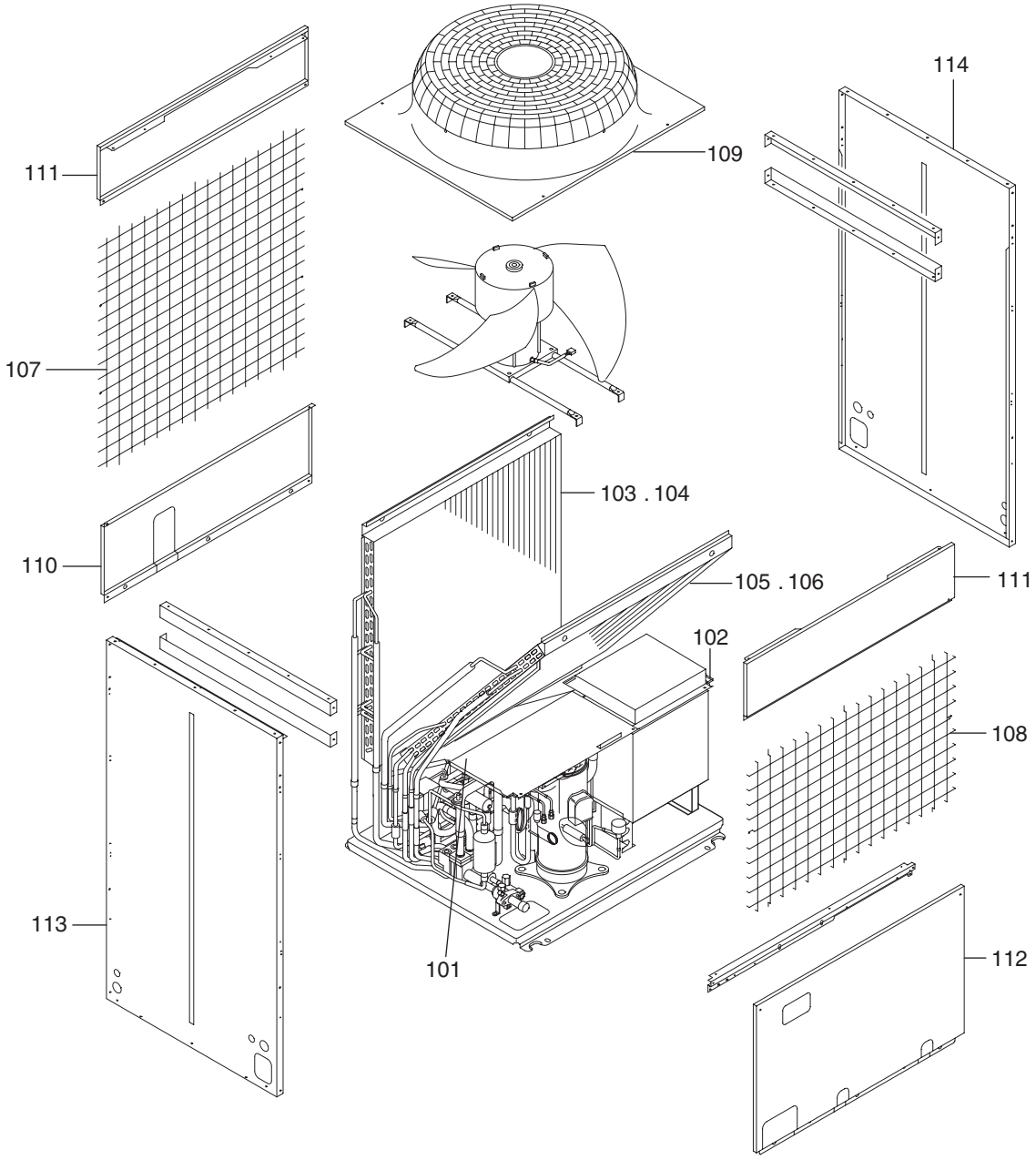

EXTERNAL PARTS

No.	Part No.	Part Name	Spec.	PURY-80TMU	PURY-100TMU					Dwg. No.	Notes for the models	Revision info.
101	R61 H50 667	Partition board L assy		1	1					W875281G09		Chg.
102	R61 L02 668	Partition board R assy		1	1					W640671G29		Chg.
103	R61 Y50 481	Heat exchanger B		1						W263694G29		Chg.
104	R61 Y51 481	Heat exchanger B			1					W263698G18		Chg.
105	R61 Y52 481	Heat exchanger F		1						W263693G68		Chg.
106	R61 Y53 481	Heat exchanger F			1					W263696G64		Chg.
107	R63 A42 638	Guard B assy		1	1					W265789G01		Chg.
108	R63 E66 611	Guard F assy		1	1					W265788G01		Chg.
109	R61 005 118	Fan guard		1	1					KB25A339G01		Chg.
110	R61 Y01 677	Panel B assy		1	1					W615886G16		Chg.
111	R12 001 669	Panel FU		2	2					W633746G09		Chg.
112	R63 Y13 652	Panel F assy		1	1					W857425G50		Chg.
113	R61 G03 661	Panel S assy L		1	1					W625856G14		
114	R61 G03 662	Panel S assy R		1	1					W625856G13		

FUNCTIONAL PARTS

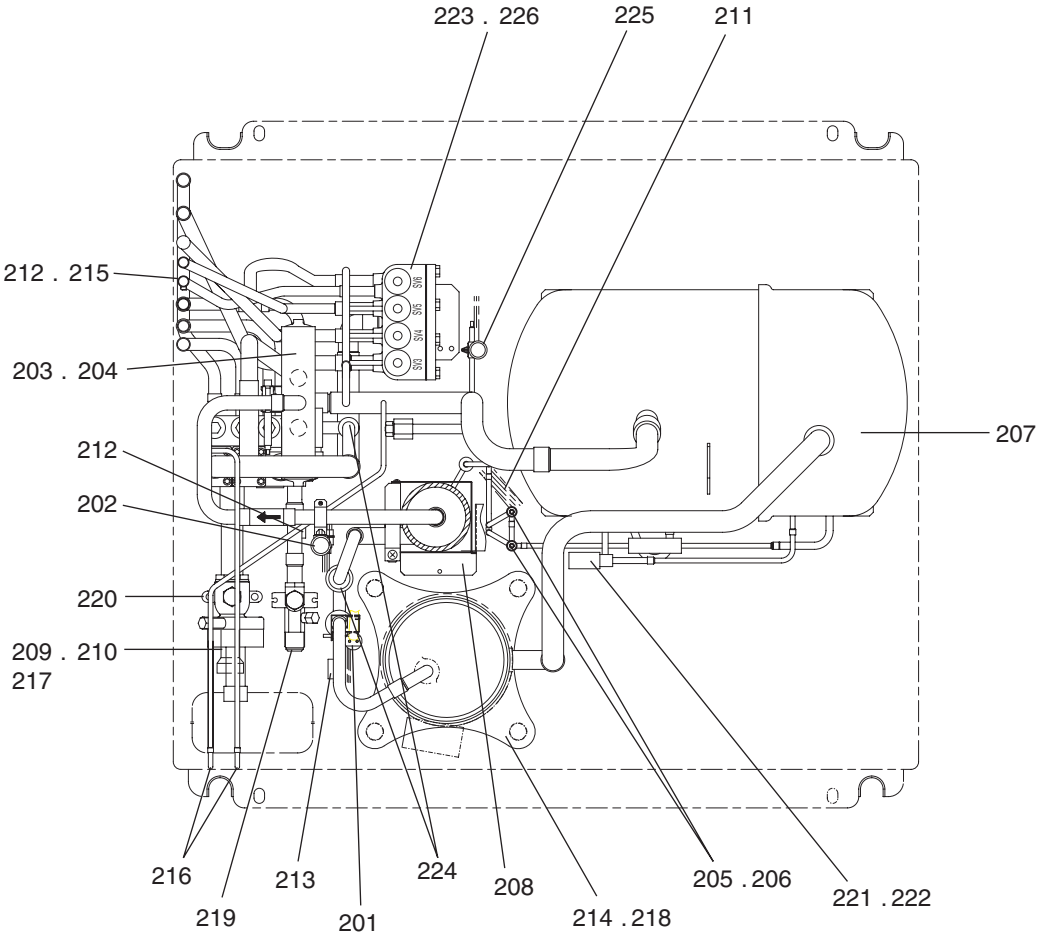

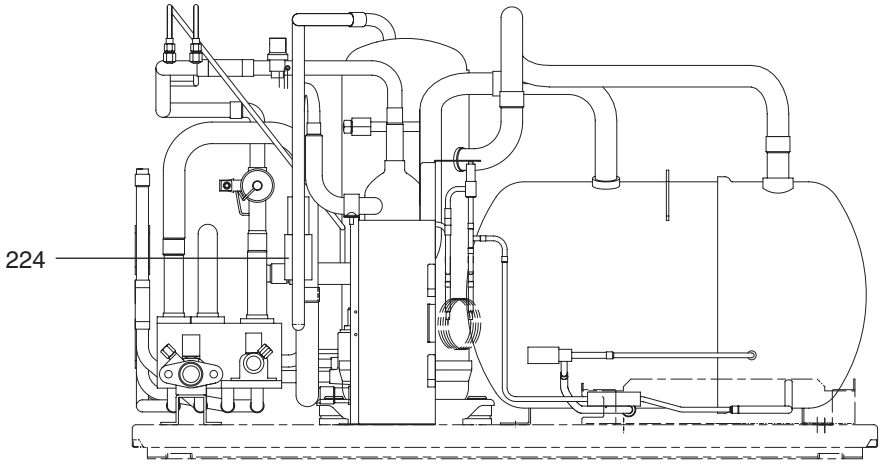

FUNCTIONAL PARTS

No.	Part No.	Part Name	Spec.	PURY-80TMU	PURY-100TMU					Dwg. No.	Notes for the models	Revision info.
201	R61 048 208	Pressure switch	ACB(UL)	1	1					P426309X01	<63H>	Chg.
202	R63 331 288	Pressure sensor		1	1					P419110X01	<63HS>	Chg.
203	R61 003 154	Four way valve	STF-07U	1	1					KB00F029G05		Chg.
204	R61 Y11 242	Four way valve coil	LB69124(UL)	1	1					P633110X01	<21S4>	
205	R61 Y06 232	Solenoid valve	NEV-202DXFU	2	2					P631266X01		
206	R61 Y10 243	Solenoid valve coil	NEV(UL)	2	2					P631267X01	<SV1,2>	
207	R61 Y30 484	Accumulator assy		1	1					W271964G04		
208	R61 Y10 487	Oil separator assy		1	1					W639856G04		
209	R61 E90 494	Pipe assy		1						W619465G04		
210	R61 E91 494	Pipe assy			1					W619465G05		
211	R63 Y07 425	Capillary tube assy	1.2X3-1000	1	1					W883531G01		Chg.
212	R63 670 202	Thermistor	NTH3A14	3	3					P425496X01	<TH5,6,7>	Chg.
213	R63 671 202	Thermistor		1	1					P425439X01	<TH1>	Chg.
214	R69 989 478	Scroll compressor	HHV92FA1-BU	1	1					RF15144G09	<MC>	
215	R61 A45 287	Sensor cover	EVA,12.7D	1	1					P227171X01		
216	R63 800 413	Charging plug		2	2					BA50U666H04		Chg.
217	R61 H50 514	Packing	T/# 1991-NF	1	1					W857909H02		
218	R61 Y08 236	Crankcase heater	208-230V 57W(UL)	1	1					P493947X02	<CH1>	Chg.
219	R61 012 410	Ball valve	3/4	1	1					P636381X01		Chg.
220	R61 Y13 410	Ball valve	1flange	1	1					P636310X02		Chg.
221	R63 G48 401	Linear expansion valve		1	1					P632342X01		Chg.
222	R63 A45 402	Linear expansion valve coil		1	1					P472016X01	<SLEV>	Chg.
223	R63 Y01 232	Solenoid valve	SR10DB	4	4					P631230X01		Chg.
224	R63 F14 418	Check valve		2	2					KG00S484G01		Chg.
225	R63 G35 288	Pressure sensor		1	1					P419129X01	<63LS>	Chg.
226	R61 Y11 243	Solenoid valve coil	SR14D,220V	4	4					P631269X01	<SV3,4,5,6>	

BLOWER PARTS

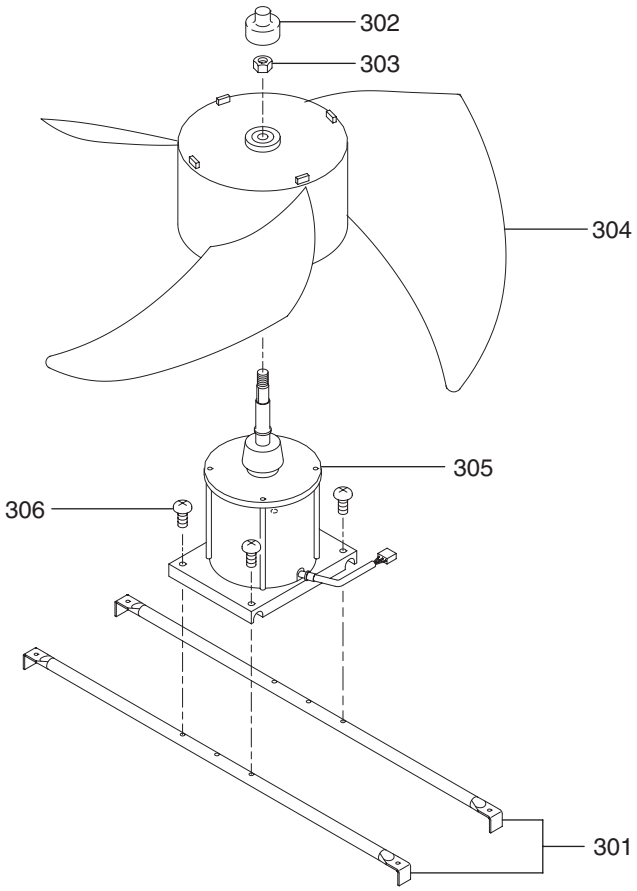

BLOWER PARTS

No.	Part No.	Part Name	Spec.	PURY-80TMU	PURY-100TMU					Dwg. No.	Notes for the models	Revision info.
301	R63 A42 140	Fan stand		2	2					W856127G05		Chg.
302	R61 A69 086	Cap		1	1					P221056X01		
303	R63 A42 122	Nut 16		1	1					P541016X01		Chg.
304	R63 E66 115	Propeller fan	750D	1	1					W872619G01		Chg.
305	R61 Y37 221	Motor	TD380VB UL	1	1					P714865X01	<MF>	
306	R63 E90 087	Screw	6×14	4	4					P521020X01		Chg.

CONTROL BOX PARTS

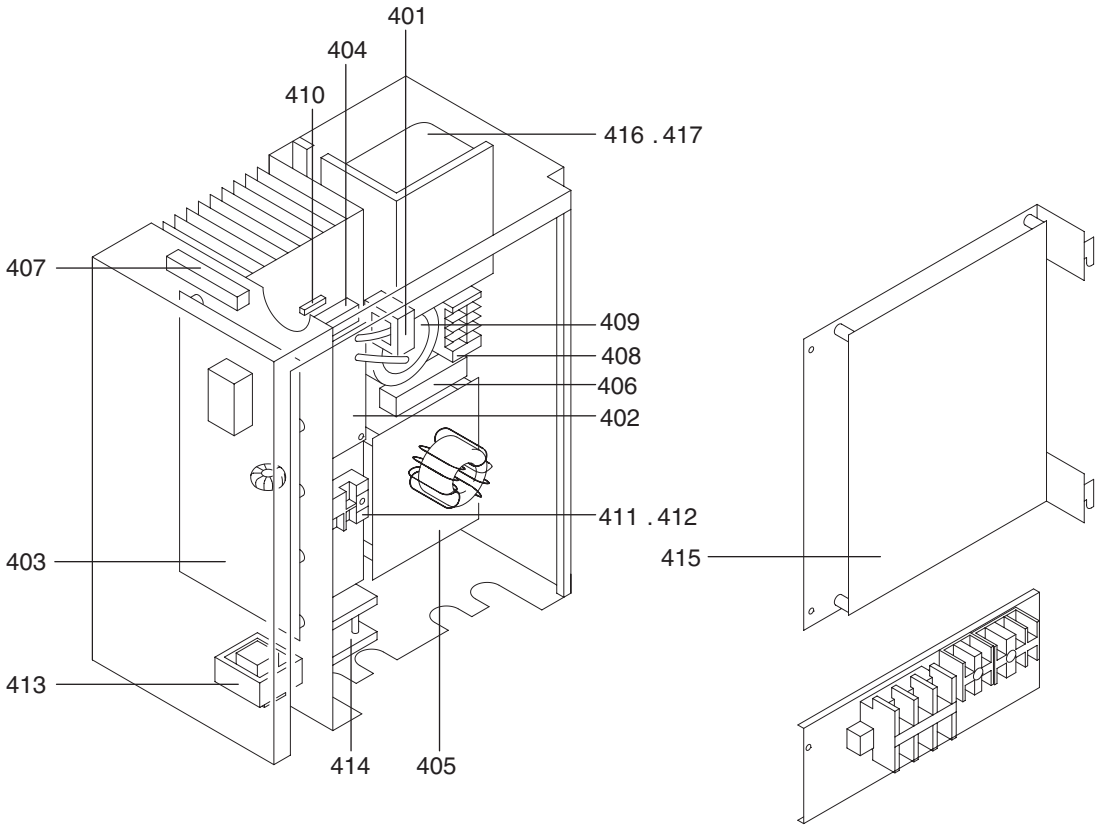

CONTROL BOX PARTS

No.	Part No.	Part Name	Spec.	PURY-80TMU	PURY-100TMU					Dwg. No.	Notes for the models	Revision info.
401	R63 A42 289	Current sensor	HC-TD131V42XP12F	1	1					P419079X03		Chg.
402	R61 658 280	G/A board		1	1					W639914G07		Chg.
403	R61 L41 280	INV board		1	1					W262954G03		Chg.
404	R61 G35 249	IPM	6MBP150RA06055SP	1	1					W848413G21		Chg.
405	R11 970 962	Power board	60PKT5	1	1					P417014X01		Chg.
406	R63 670 234	Resistor	MFS30A220KI	1	1					P411113X01		Chg.
407	R63 A42 234	Resistor	MFS40A111KI	1	1					W237975K23		Chg.
408	R61 A42 225	Relay		1	1					W871555G01		Chg.
409	R63 Y18 252	Capacitor		1	1					KE80H088G11		Chg.
410	R63 F14 201	Thermistor		1	1					P414095X01		Chg.
411	R61 002 318	Diode	DFC60MK80	1						W876941G17		Chg.
412	R61 L73 320	Diode	DF75BA80		1					W876941G10		Chg.
413	R11 017 923	Choke coil		1	1					KE80F888G01		Chg.
414	R61 Y04 300	Fan assy		1	1					P712398X01		Chg.
415	R61 Y93 280	Main board		1	1					W639930G08		
416	R61 005 259	Reactor		1						KG00S351G01		Chg.
417	R11 001 944	Reactor			1					P715425X02		Chg.

MITSUBISHI ELECTRIC CORPORATION

BWE0204A (20190930)