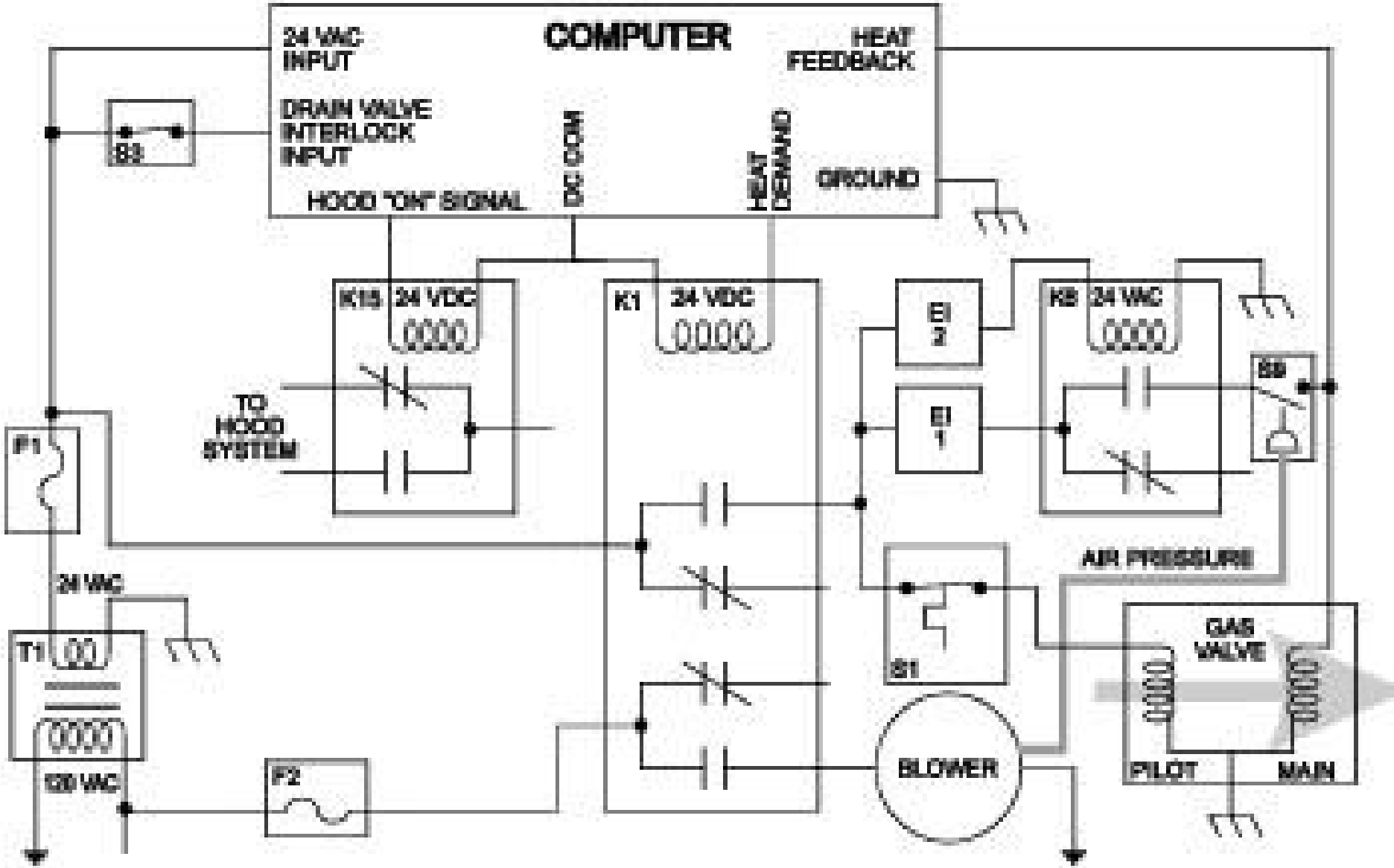
COMPUTER
24 VAC INPUT
HEAT FEEDBACK
DRAIN VALVE INTERLOCK INPUT
DC COM
HEAT DEMAND
GROUND
HOOD "ON" SIGNAL
S3
K15
24 VDC
K1
24 VDC
EI 2
EI 1
K8
24 VAC
S9
TO HOOD SYSTEM
F1
24 VAC
T1
120 VAC
F2
S1
AIR PRESSURE
GAS VALVE
BLOWER
PILOT
MAIN

Split Vat Fryers:

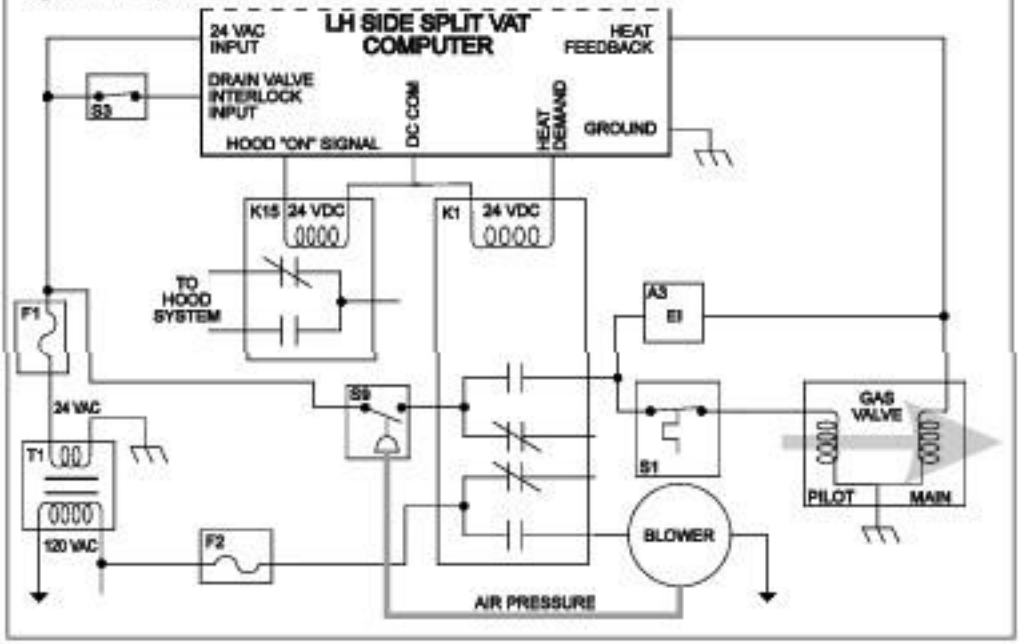

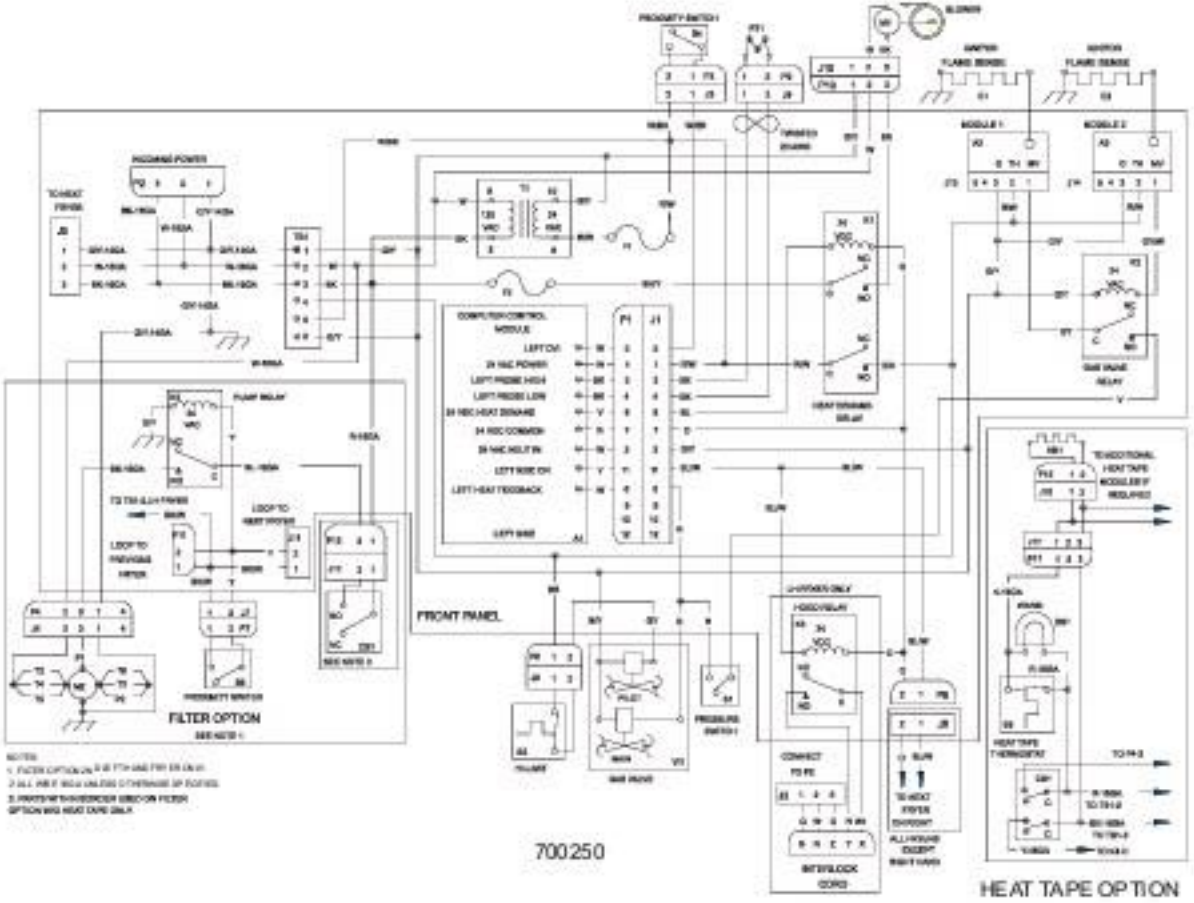
PROXIMITY SWITCH
BLOWER
MOTOR FLAME SENSE
MOTOR FLAME SENSE
MODULE 1
MODULE 2
PROGRAMMING POWER
TO HEAT PRESS
COMPUTER CONTROL MODULE
LEFT CH
24 VAC POWER
LEFT PRESS HIGH
LEFT PRESS LOW
24 VAC HEAT DEMAND
24 VAC COMMON
24 VAC HOLD IN
LEFT SIDE CH
LEFT HEAT FEEDBACK
LEFT SIDE
HEAT DEMAND RELAY
GAS VALVE RELAY
PUMP RELAY
TO TSH (LH PANEL)
LOOP TO HEAT PRESS
LOOP TO PRESSURE HEATER
FRONT PANEL
FILTER OPTION
SEE NOTE 1
PROXIMITY SWITCH
PILOT
MAIN
GAS VALVE
PRESSURE SWITCH
TRANSF
HOSE RELAY
CONNECT TO PS
INTERLOCK CORD
TO HEAT PRESS THERMOSTAT
ALL HOSES EXCEPT RIGHT HAND
OPTIONAL HEAT TAPE MODULE(S) REQUIRED
HEAT TAPE THERMOSTAT
TO TH-2
HEAT TAPE OPTION

700250

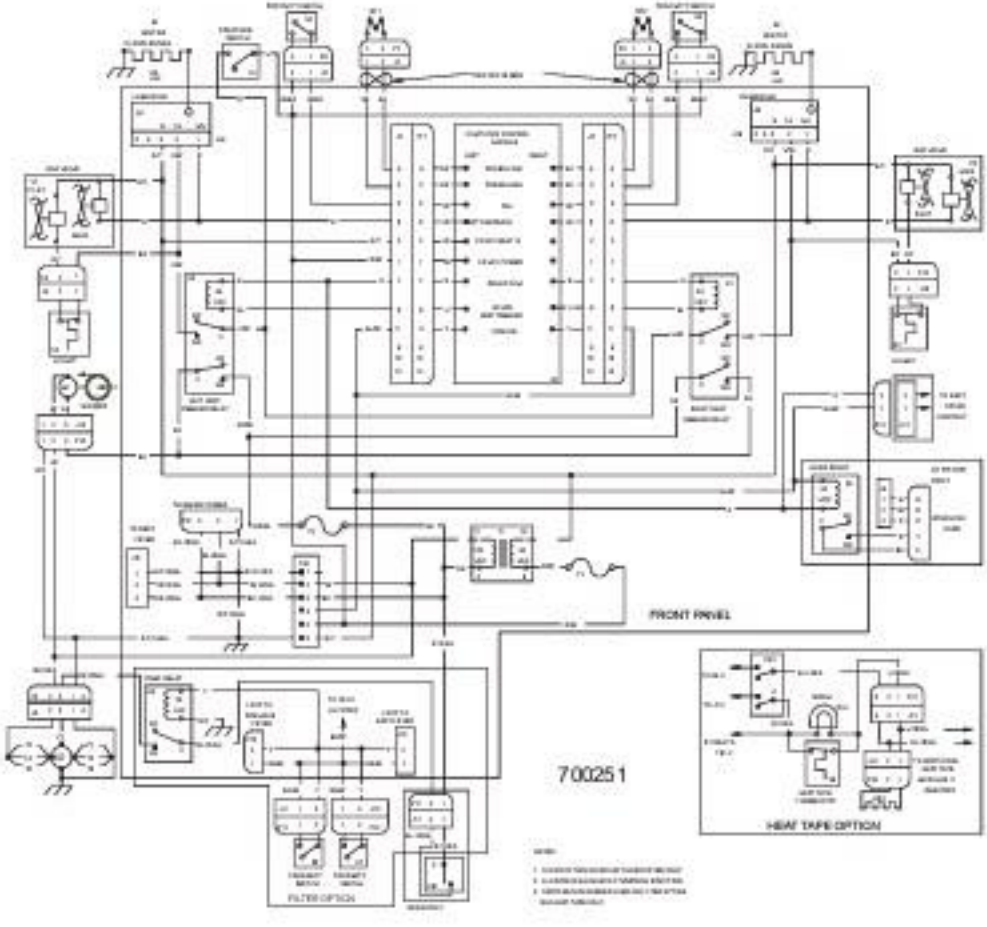
FRONT PANEL
700251
HEAT TAPE OPTION
FILTER OPTION