Model SC180 Series Super-Chil Water Refrigeration Unit Parts List for Models

SC180A04

MODEL SC180 BASE PARTS LIST

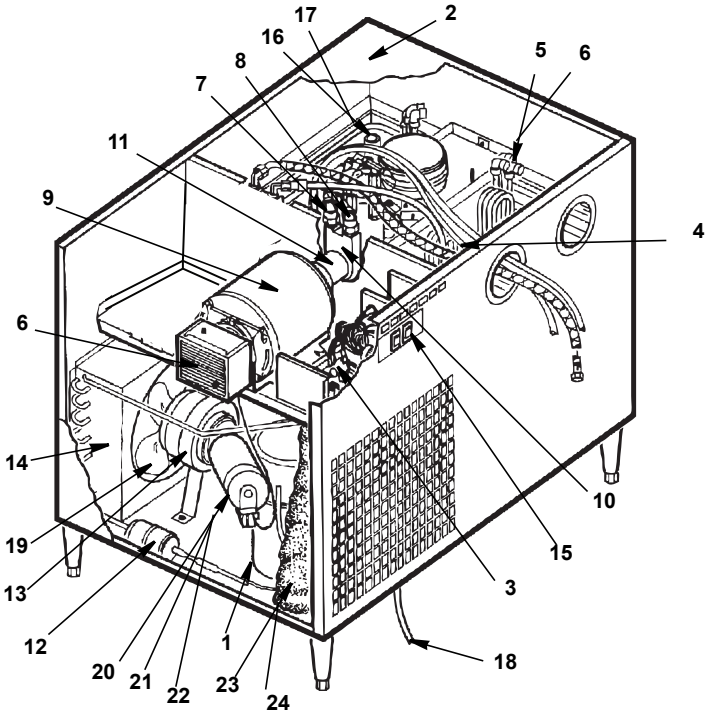

Part Numbers:
SS902829-161

DESCRIPTION		PART NO.
1	**Compressor**	
	a. 1/3 hp, 120 VAC, 1 Phase , 60 Hz, R-404A, Domestic	8251793
	b. 1/3 hp, 220 VAC, 1 Phase, 50 Hz , R-404A, International	00215881
2	Cover	00217786
3	**Liquid Level Control**	
	a. 1/3 hp, 120 VAC , NCC, Domestic	00206182
	b. 1/3 hp, 220 VAC , NCC, International	00206695
4	Adapter, 3/8” OD Tube x 5/16” Tube, S-Seal	00208796
5	Elbow, 3/8” Tube x 5/16” Tube, S-Seal	00208800
6	Cover, 3/8” OD Tube Collet, Plastic	00208803
7	Elbow, 112" OD x 1/2 OD Tube, John Guest	00210048
8	Adapter, 3/8” Barb x 1/2 OD Stem	00217015
9	Motor 113 hp, 110-120/200-240 VAC, 50/60 Hz	00213596
10	Pump, 50 GPH (189 LPH), without Relief, Stainless Steel	00702906
11	Clamp Assembly, Coupling	00705000
12	Drier, 1 7/8” Diameter x 3 3/4” X 1/4” Outlets	00216755
13	**Motor, Fan**	
	a. 120 VAC, 60 Hz, 9 Watts, Domestic	8251893
	b. 230 VAC, 50/60 Hz, 9 Watts, International	00216102
14	Condenser, 1/3 hp	00755489
15	Switch, Single Pole Single Throw, 16 Amp, 3/4 hp, Rocker	00804437
16	O-ring, 3/8” ID x 3/4” OD, Ntrl	00850127
17	Stand Pipe	3002883
18	Drain Hose	RM931423
19	Blade, Condenser Fan	2416253
20	**Compressor Start Relay**	
	a. Domestic	020003406
	b. International	00215967
21	**Compressor Start Capacitor,**	
	a. Domestic	020003408
	b. International	00215969
22	**Compressor Overload Protector**	
	a. Domestic	020003407
	b. International	00215971
23	Heat Exchanger	00215822
24	Accumulator, Vertical	00208594

MODEL SC180 AGITATOR & ICE BANK CONTROL

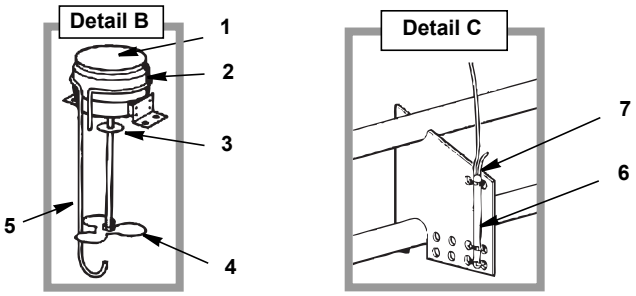

Part Numbers:
SS902829-161

DESCRIPTION	PART NO.
Detail B (Agitator Motor)	
1 Motor, Agitator	
a. 15 Watts, 120 VAC, 60 Hz, 24" Lead, Domestic	00754331
b. 15 Watts , 220 VAC, 50/60 Hz, 24" Lead, International	00754335
2 Tab Clamp	00859119
3 Washer, Water Slinger	00377102
4 Blade, Agitator, 112 Pitch	00206557
5 Heat Sink	00200911
Detail C (Ice Bank Control)	
6 Electronic Ice Bank Control	
a. Retrofit Kit, 120 VAC , 50/60 Hz (Domestic units only)	00219491
b. Retrofit Kit, 230 VAC , 50/60 Hz (International units only)	00219492
7 Bracket, Ice Bank Control Bulb	00216048