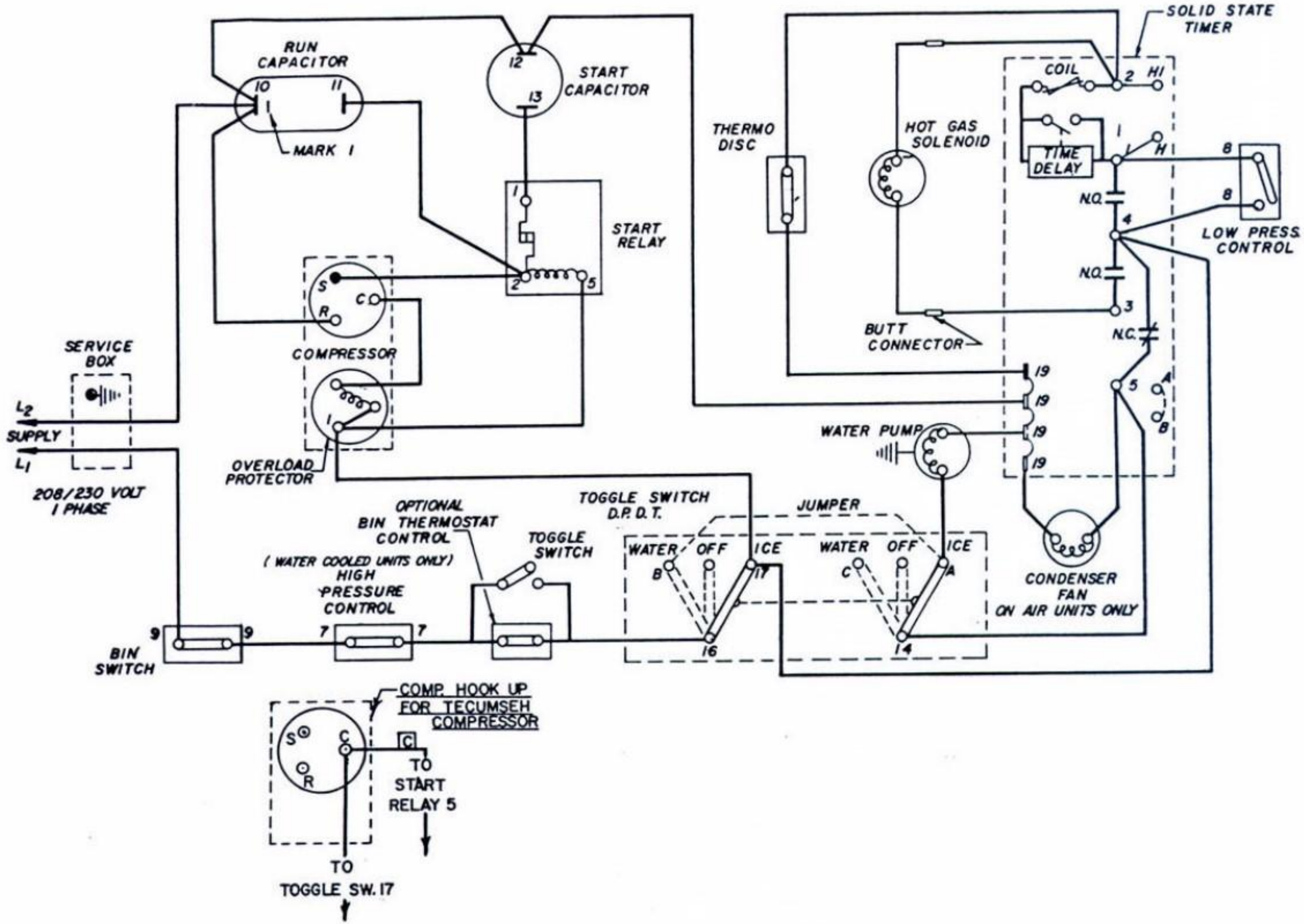
RUN CAPACITOR
10
11
MARK 1
12
13
START CAPacitor
START RELAY
1
2
5
S
C
R
COMPRESSOR
OVERLOAD PROTECTOR
SERVICE BOX
L2
SUPPLY
L1
208/230 VOLT 1 PHASE
THERMO DISC
HOT GAS SOLENOID
SOLID STATE TIMER
COIL
2
HI
TIME DELAY
1
H
8
8
LOW PRESS. CONTROL
N.O.
4
N.O.
3
N.C.
BUTT CONNECTOR
19
19
19
19
5
A
B
WATER PUMP
CONDENSER FAN ON AIR UNITS ONLY
OPTIONAL BIN THERMOSTAT CONTROL
(WATER COOLED UNITS ONLY)
HIGH PRESSURE CONTROL
TOGGLE SWITCH
TOGGLE SWITCH D.P.D.T.
JUMPER
WATER
OFF
ICE
B
17
16
WATER
OFF
ICE
C
A
14
9
9
BIN SWITCH
7
7
COMP. HOOK UP FOR TECUMSEH COMPRESSOR
S
C
R
C
TO START RELAY 5
TO TOGGLE SW. 17

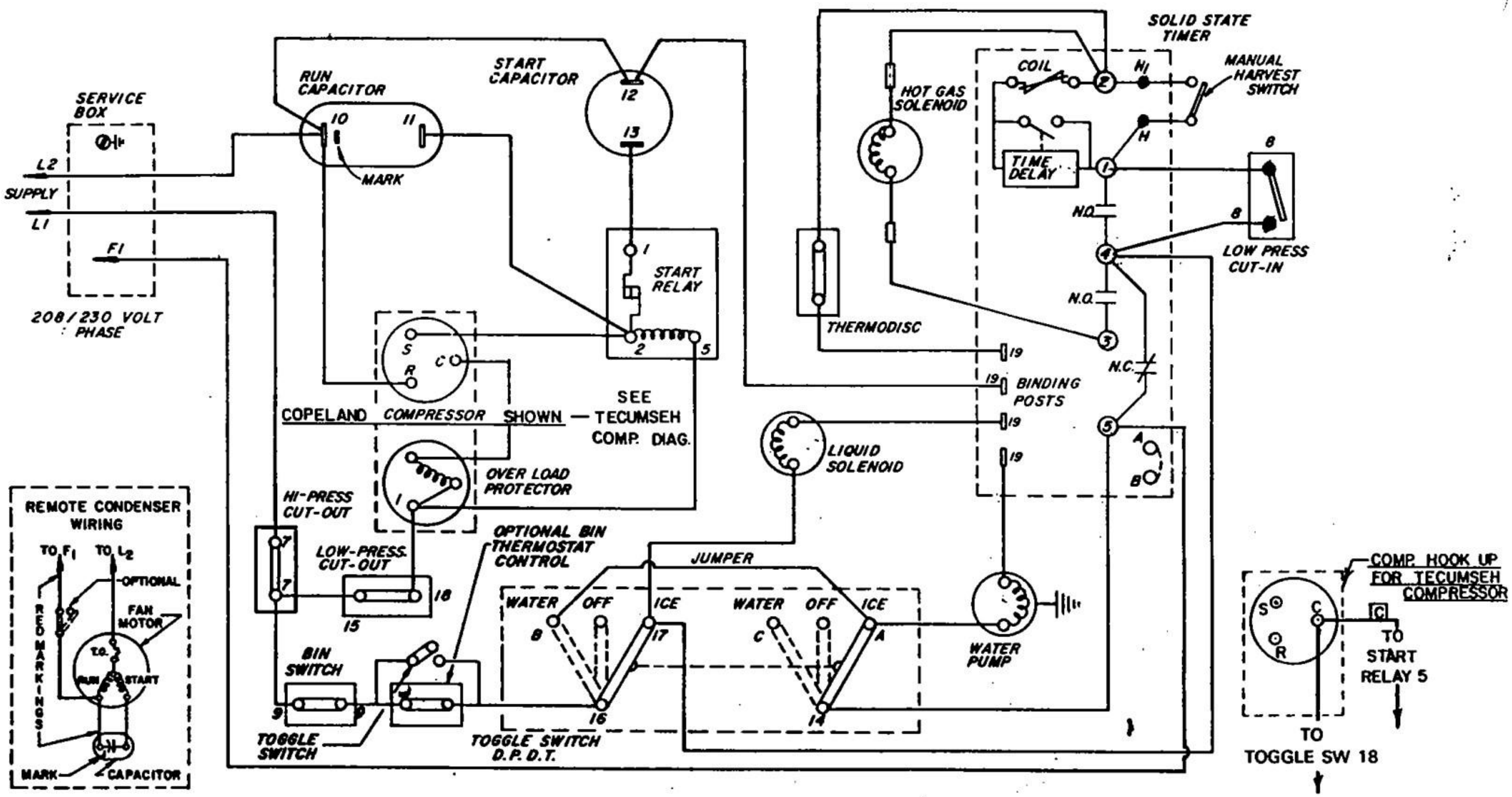
SERVICE BOX
L2
SUPPLY
L1
F1
208/230 VOLT 1 PHASE
RUN CAPACITOR
10
11
MARK
START CAPACITOR
12
13
START RELAY
1
2
5
S
R
C
COPELAND COMPRESSOR SHOWN — SEE TECUMSEH COMP. DIAG.
OVER LOAD PROTECTOR
HI-PRESS CUT-OUT
7
LOW-PRESS. CUT-OUT
15
18
BIN SWITCH
9
TOGGLE SWITCH
OPTIONAL BIN THERMOSTAT CONTROL
TOGGLE SWITCH D.P.D.T.
WATER
OFF
ICE
B
17
16
JUMPER
C
A
14
LIQUID SOLENOID
WATER PUMP
THERMODISC
HOT GAS SOLENOID
SOLID STATE TIMER
COIL
N1
MANUAL HARVEST SWITCH
H
TIME DELAY
N.O.
N.C.
LOW PRESS CUT-IN
8
19
BINDING POSTS
A
B
REMOTE CONDENSER WIRING
TO F1
TO L2
OPTIONAL
FAN MOTOR
T.O.
RUN
START
RED MARKINGS
MARK
CAPACITOR
COMP. HOOK UP FOR TECUMSEH COMPRESSOR
TO START RELAY 5
TO TOGGLE SW 18

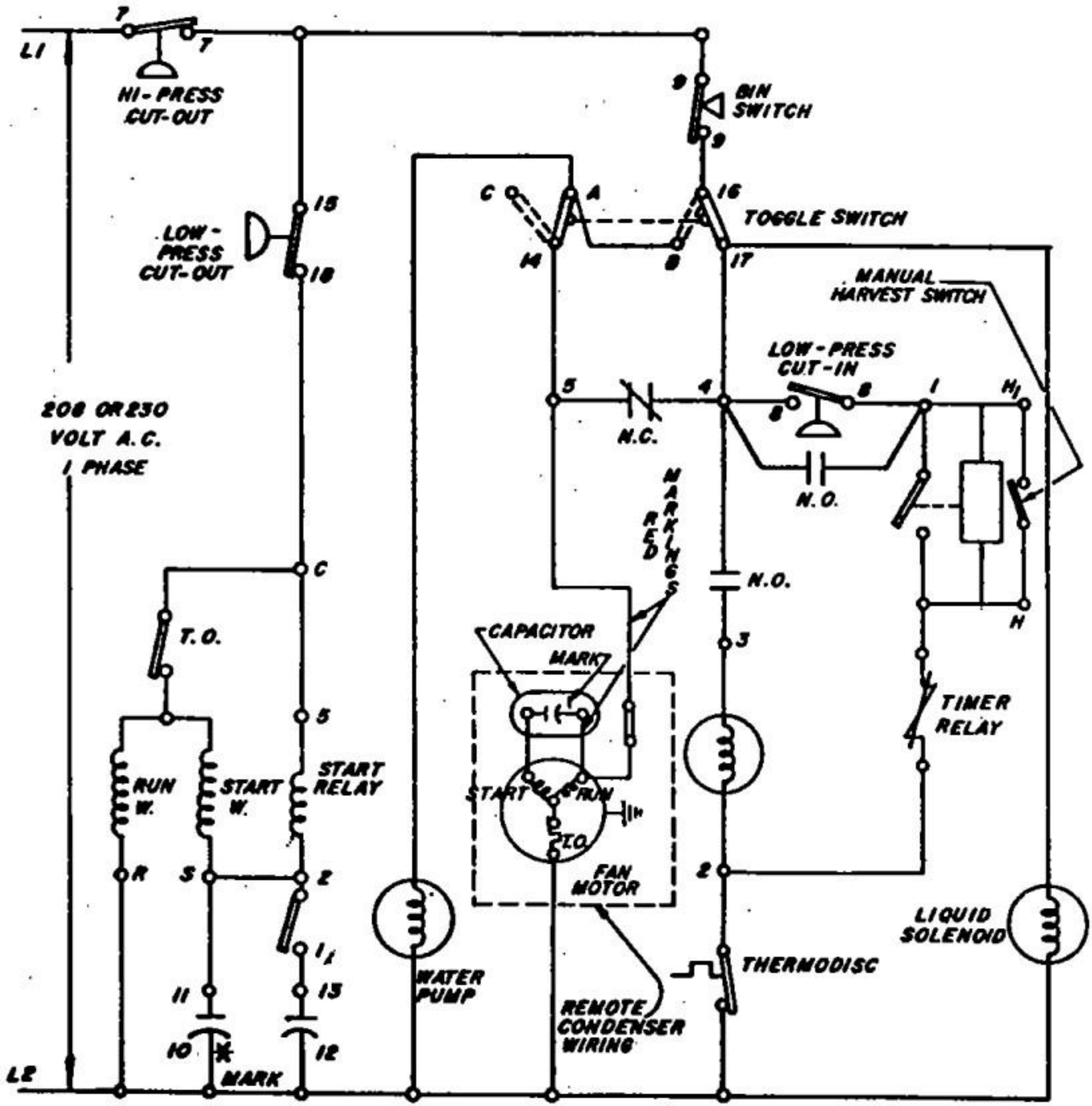

REVISION D

D681371-4
81-0495-3