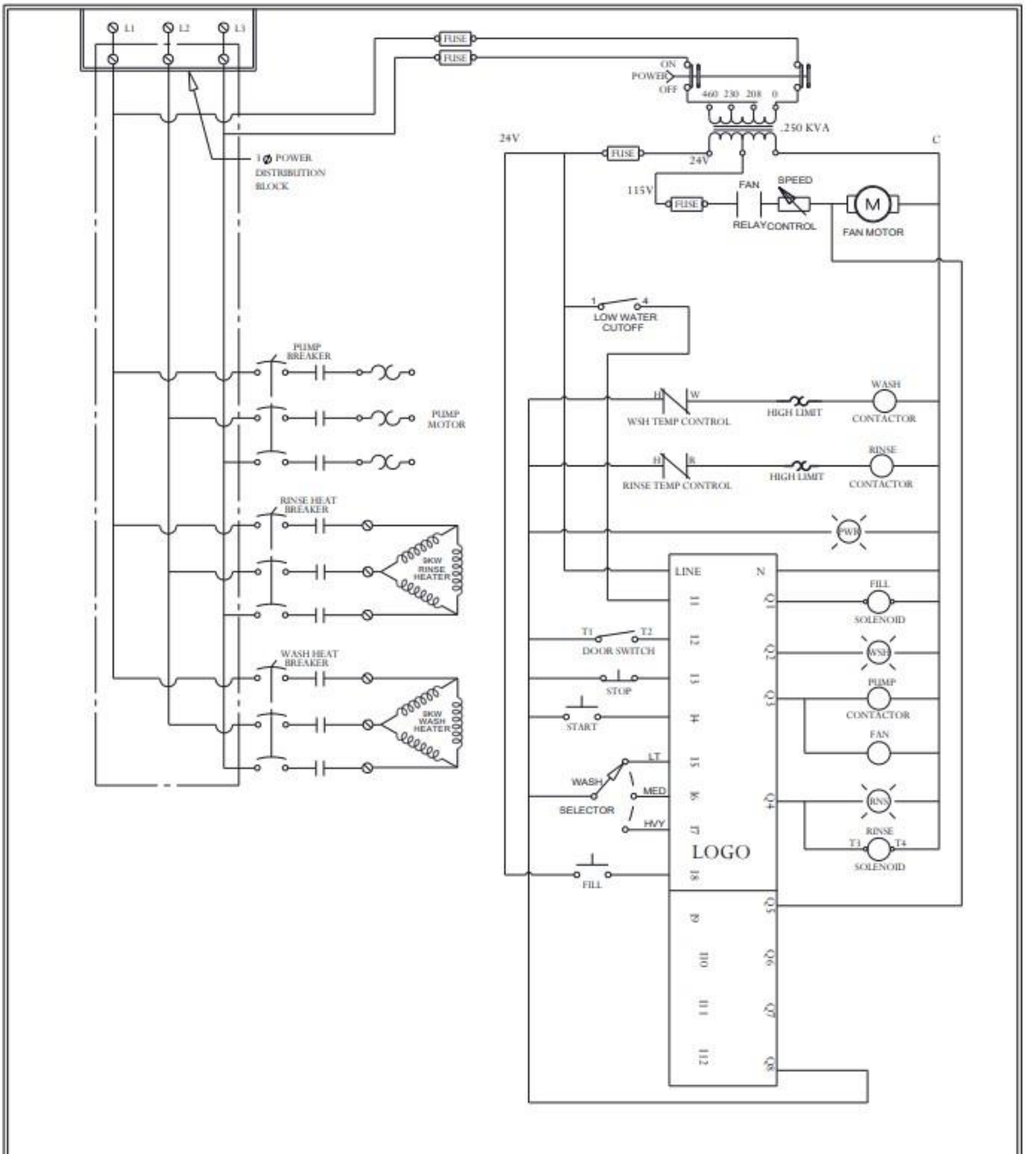
L1
L2
L3
FUSE
FUSE
ON
POWER
OFF
460 230 208 0
.250 KVA
24V
C
FUSE
24V
115V
FUSE
FAN
RELAY
SPEED
CONTROL
M
FAN MOTOR
1 Ø POWER
DISTRIBUTION
BLOCK
1
4
LOW WATER
CUTOFF
PUMP
BREAKER
PUMP
MOTOR
H
W
WSH TEMP CONTROL
HIGH LIMIT
WASH
CONTACTOR
H
R
RINSE TEMP CONTROL
HIGH LIMIT
RINSE
CONTACTOR
RINSE HEAT
BREAKER
5KW
RINSE
HEATER
PWR
LINE
N
I1
I2
I3
I4
I5
I6
I7
I8
I9
I10
I11
I12
Q1
Q2
Q3
Q4
Q5
Q6
Q7
Q8
FILL
SOLENOID
T1
T2
DOOR SWITCH
WSH
STOP
PUMP
CONTACTOR
START
FAN
LT
WASH
MED
SELECTOR
HVY
RNS
RINSE
T1
T4
SOLENOID
LOGO
FILL
WASH HEAT
BREAKER
5KW
WASH
HEATER

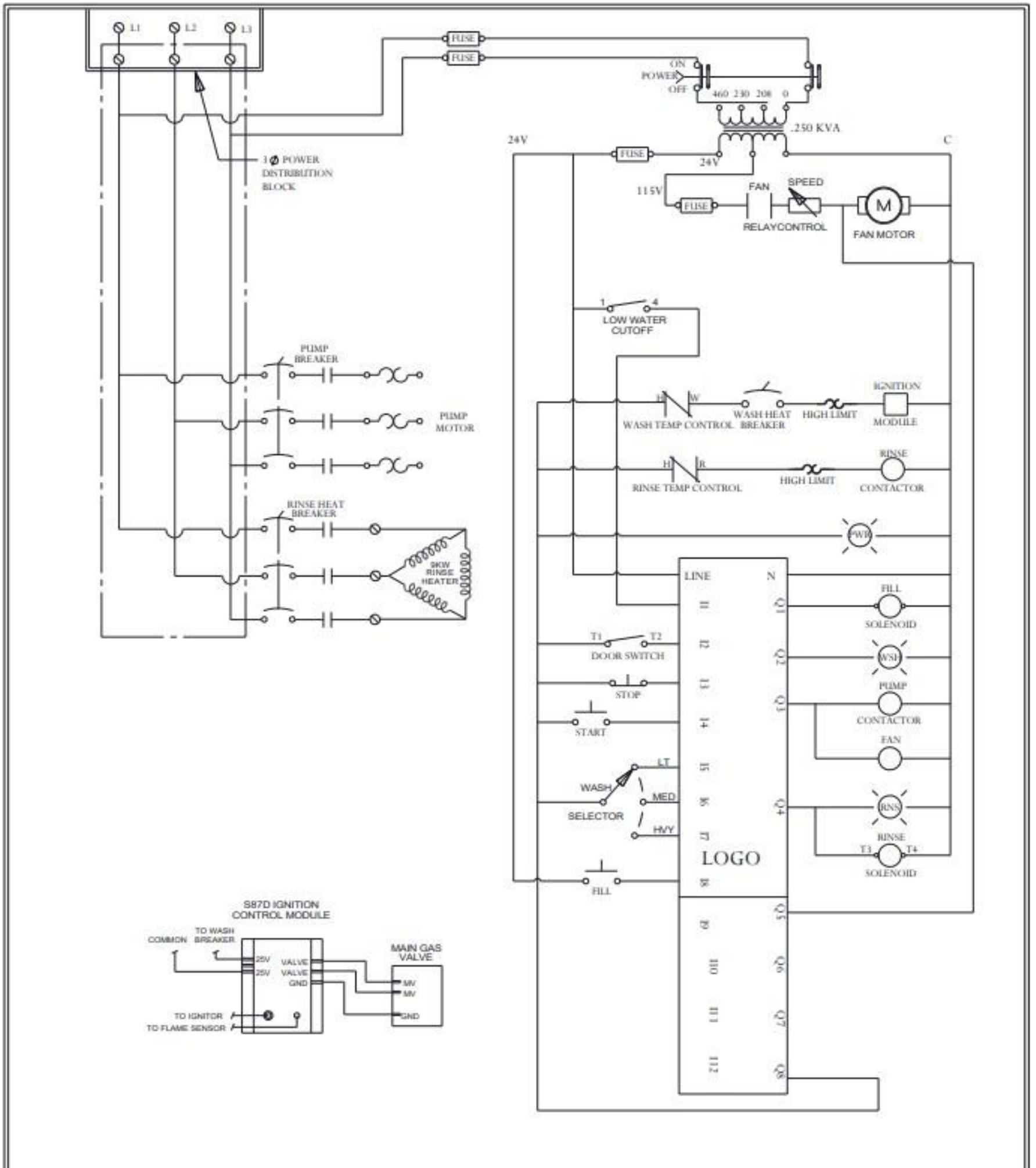
L1
L2
L3
FUSE
FUSE
ON
POWER
OFF
460 230 208 0
.250 KVA
24V
C
FUSE
24V
115V
FUSE
FAN
SPEED
RELAYCONTROL
M
FAN MOTOR
1 Ø POWER DISTRIBUTION BLOCK
1
4
LOW WATER CUTOFF
PUMP BREAKER
PUMP MOTOR
H
W
WASH TEMP CONTROL
WASH HEAT BREAKER
HIGH LIMIT
IGNITION MODULE
H
R
RINSE TEMP CONTROL
HIGH LIMIT
RINSE CONTACTOR
RINSE HEAT BREAKER
5KW RINSE HEATER
PWR
LINE
N
I1
I2
I3
I4
I5
I6
I7
I8
I9
I10
I11
I12
Q1
Q2
Q3
Q4
Q5
Q6
Q7
Q8
FILL SOLENOID
WSH
PUMP CONTACTOR
FAN
RNS
RINSE SOLENOID
T3
T4
T1
T2
DOOR SWITCH
STOP
START
LT
WASH
MED
SELECTOR
HVY
LOGO
FILL
S87D IGNITION CONTROL MODULE
COMMON
TO WASH BREAKER
25V
25V
VALVE
VALVE
GND
MAIN GAS VALVE
MV
MV
GND
TO IGNITOR
TO FLAME SENSOR