Lochinvar®
HIGH EFFICIENCY BOILERS & WATER HEATERS

Replacement Parts List

PARTS & SERVICE DEPARTMENT
Nashville, Tennessee
615-889-8900 • Fax: 615-882-2918
parts_team@lochinvar.com
www.Lochinvar.com

Knight

Heating Boilers

KB 81 thru 286

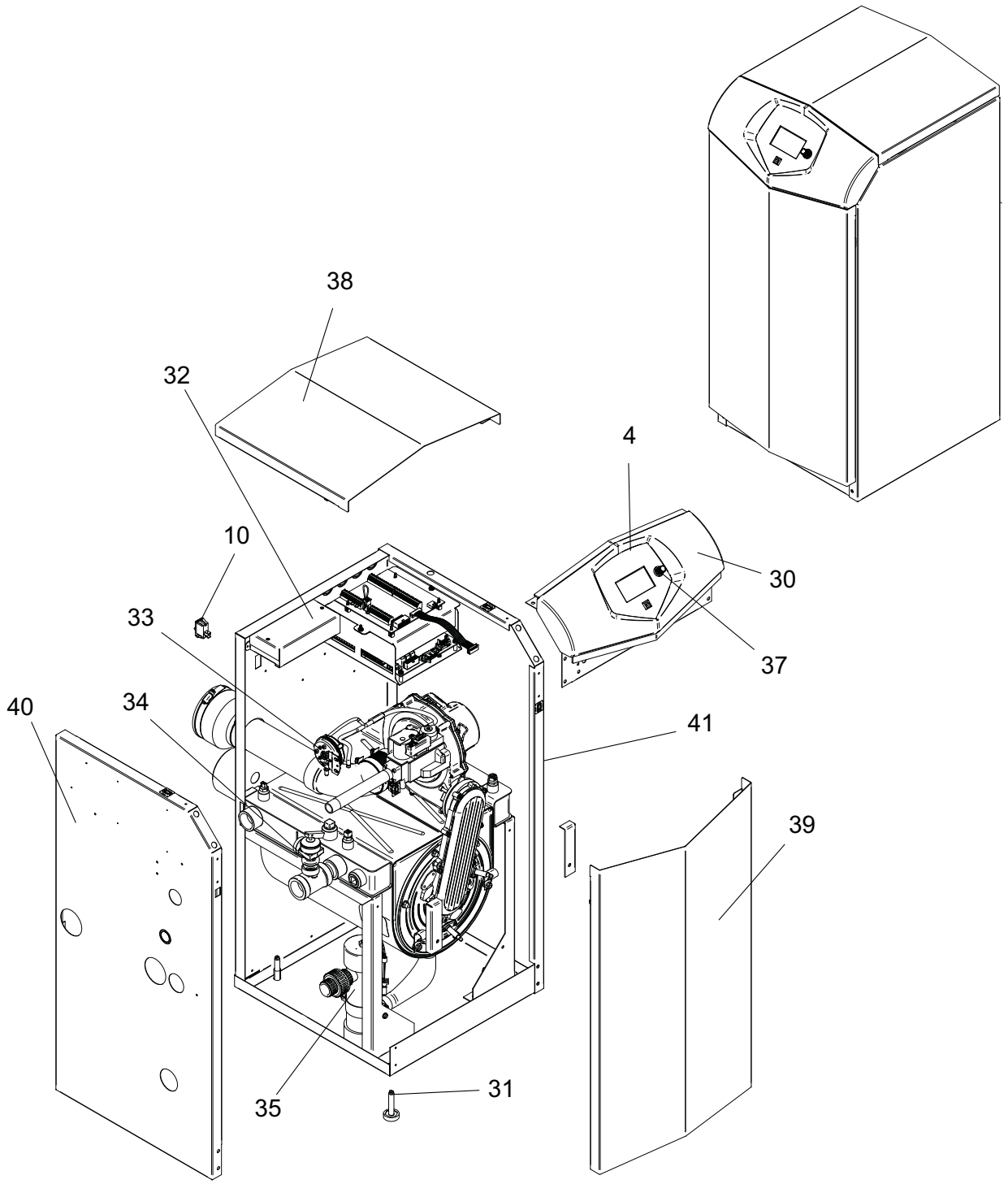

HEAT EXCHANGER 81-211

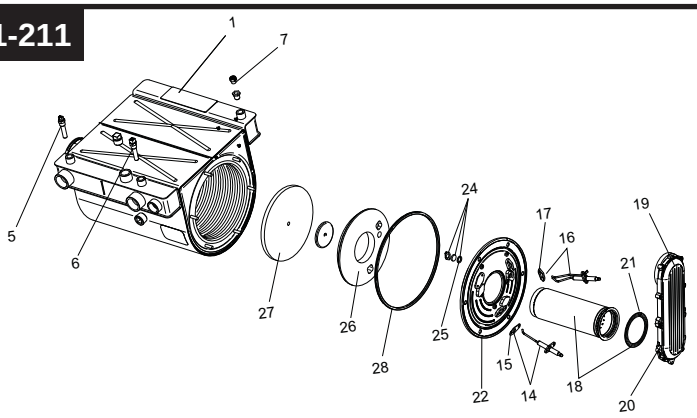

HEAT EXCHANGER 286

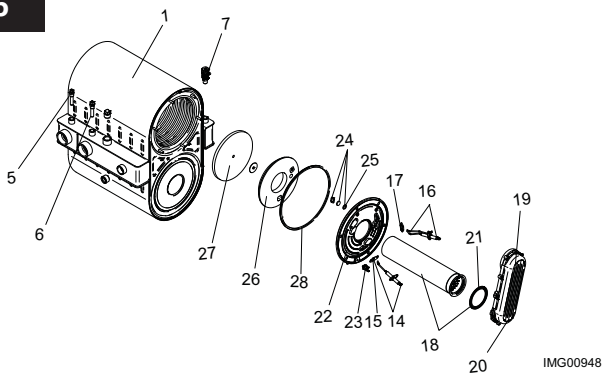

GAS TRAIN 81-211

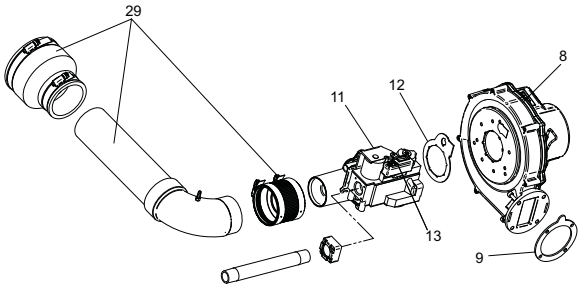

GAS TRAIN 286

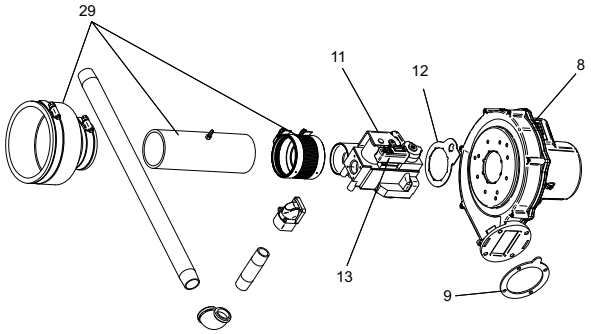

CONTROL PANEL

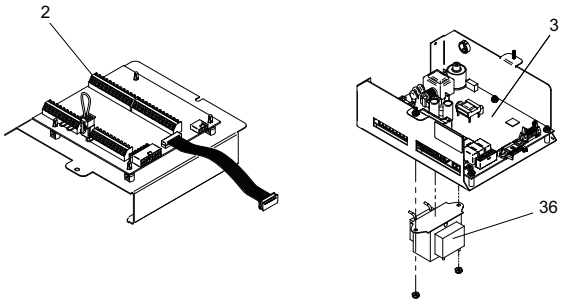

ITEM NO.	PART NO.	DESCRIPTION	MODEL
		HEAT EXCHANGER ASSEMBLY	
1	100147452	HEAT EXCHANGER	KB 081
1	100147453	HEAT EXCHANGER	KB 106
1	100147454	HEAT EXCHANGER	KB 151
1	100147455	HEAT EXCHANGER	KB 211
1	100147456	HEAT EXCHANGER	KB 286
		CONTROLS	
2	100208459	LOW VOLTAGE CONNECTION BOARD	ALL
3	100167799	INTEGRATED CONTROL PRIOR TO H10	KB 81-286
3	100167819	INTEGRATED CONTROL BEGINNING H10	KB 81-286
3	100167800	HIGH ALTITUDE INTEGRATED CONTROL PRIOR TO H10	KB 81-286
3	100167820	HIGH ALTITUDE INTEGRATED CONTROL BEGINNING H10	KB 81-286
4	100208458	USER INTERFACE CONTROL	ALL
–	100158021	USER INTERFACE OVERLAY	ALL
5	100208549	INLET SENSOR	ALL
6	100208544	OUTLET/HIGH LIMIT SENSOR	ALL
7	100167445	AIR VENT VALVE	ALL
8	100145003	FAN ASSEMBLY	KB 081 & 106
8	100145004	FAN ASSEMBLY	KB 151
8	100145005	FAN ASSEMBLY	KB 211
8	100145006	FAN ASSEMBLY	KB 286
9	100208764	GASKET/ BLOWER	KB 081, 106 & 211
9	100208101	GASKET/ BLOWER	KB 151 & 286
10	100208242	ON/OFF SWITCH	ALL
		GAS VALVES	
11	100172007	GAS VALVE ASSEMBLY	KBN081
11	100172002	GAS VALVE ASSEMBLY	KBN106
11	100172003	GAS VALVE ASSEMBLY	KBN151
11	100172004	GAS VALVE ASSEMBLY	KBN211
11	100172005	GAS VALVE ASSEMBLY	KBN286
12	100208760	GAS VALVE GASKET	KBN081-286
13	100208324	GAS VALVE SWITCH	ALL
		PILOT & BURNER ASSEMBLIES	
14	100165930	FLAME SENSOR W/GASKET	ALL
15	100208091	GASKET, FLAME SENSOR	ALL
16	100165929	IGNITOR W/GASKET	ALL
17	100208086	GASKET, IGNITOR	ALL
18	100135275	BURNER W/ GASKET	KB 081
18	100135307	BURNER W/ GASKET	KB 106
18	100135308	BURNER W/ GASKET	KB 151
18	100135309	BURNER W/ GASKET	KB 211
18	100135310	BURNER W/ GASKET	KB 286
19	100173791	GAS/AIR ARM ASSEMBLY W/GASKET	KB 081
19	100173795	GAS/AIR ARM ASSEMBLY W/GASKET	KB 106
19	100173796	GAS/AIR ARM ASSEMBLY W/GASKET	KB 151
19	100173792	GAS/AIR ARM ASSEMBLY W/GASKET	KB 211/286
20	100208763	GASKET - GAS / AIR ARM ASSEMBLY	ALL
21	100208085	GASKET, BURNER	ALL
22	100173794	HEAT EXCHANGER ACCESS DOOR KIT	ALL
23	100094572	HEX DOOR TEMP SWITCH BEGINNING SN# F14	KB 286
		MISCELLANEOUS	
24	100163249	SIGHT GLASS	ALL
25	100208762	GASKET/ SIGHT GLASS	ALL
26	100208060	BURNER PLATE, INSULATION, DOOR	ALL
27	100208061	DIVIDER PLATE, INSULATION BAFFLE	ALL
28	100208088	GASKET DOOR RUBBER	ALL
29	100163250	AIR INLET KIT	KB 081-106
29	100163251	AIR INLET KIT	KB 151
29	100163252	AIR INLET KIT	KB 211
29	100163253	AIR INLET KIT	KB 286
30	100208320	DISPLAY BEZEL	ALL
31	100134788	LEVELING LEG	ALL
32	100163053	HIGH VOLTAGE CONNECTION BOARD	ALL
33	100166098	PRESSURE SWITCH	KB 081
33	100208377	PRESSURE SWITCH	KB 106, 151 & 286
		PLEASE HAVE MODEL AND SERIAL NUMBER WHEN ORDERING PARTS	

ITEM NO.	PART NO.	DESCRIPTION	MODEL
		MISCELLANEOUS (CONTINUED)	
33	100208378	PRESSURE SWITCH	KB 211
34	100208449	RELIEF VALVE 30 PSI	ALL
35	100163241	CONDENSATE TRAP	KB 081-211
35	100163244	CONDENSATE TRAP	KB 286
36	100208230	TRANSFORMER	ALL
37	100162600	KNOB, FLUTED W/ SKIRT	ALL
–	100208808	FUSE, 0.8 AMP	ALL
–	100208231	FUSE, 3.15 AMP	ALL
–	100208232	FUSE, 5 AMP	ALL
–	100208653	FLOW SWITCH	ALL
–	100208834	OUTDOOR AIR SENSOR	ALL
–	100208243	BLOCKED DRAIN SWITCH	ALL
–	100208152	GAUGE TRIOMETER, 75# PSI	ALL
–	100170642	FLUE TEMP SENSOR KIT	ALL
–	100208652	MRLWCO WITH TEST	ALL
–	100157719	ALARM BELL	ALL
–	100157718	SYSTEM SENSOR	ALL
–	100159006	LP CONVERSION KIT	KBN081
–	100159007	LP CONVERSION KIT	KBN106
–	100159008	LP CONVERSION KIT	KBN151
–	100159009	LP CONVERSION KIT	KBN211
–	100159010	LP CONVERSION KIT	KBN286
–	100189053	KIT FLUE COLLAR 3"	KB 081-211
–	100189054	KIT FLUE COLLAR 4"	KB 286
–	100157626	HEAT EXCHANGER CLEANING KIT	KB 081-106
–	100157627	HEAT EXCHANGER CLEANING KIT	KB 151-286
–	100163204	BIRD SCREEN KIT 3"	KB 081-211
–	100163205	BIRD SCREEN KIT 4"	KB 286
–	100208569	BULBWELL 1/4"	ALL
–	100208552	SYSTEM SENSOR	ALL
–	100148402	LIMIT, HEAT EXCHANGER OVER TEMP	KB 286
–	100208625	HARNESS, CONNECTION BOARD	ALL
–	100172813	HARNESS, POWER	ALL
–	100208627	HARNESS, GAS VALVE	ALL
–	100208628	HARNESS, UNIT	KB 081-211
–	100072936	HARNESS, UNIT	KB 286
–	100208636	CABLE, RIBBON	ALL
–	100208620	HARNESS, SPARK ELECTRODE	KB 081-106 & 286
–	100208621	HARNESS, SPARK ELECTRODE	KB 151 & 211
–	100208622	HARNESS, FLAME SENSE ELECTRODE	ALL
		PUMPS	
–	100166434	PUMP	KB 081-211
–	100166410	PUMP, HIGH ALTITUDE	KB 081-211
–	100166435	PUMP	KB 286
		JACKET ASSEMBLY	
38	100269740	JACKET, TOP	KB 081 - 106
38	100150355	JACKET, TOP	KB 151
38	100149840	JACKET, TOP	KB 211
38	100149825	JACKET, TOP	KB 286
39	100189055	JACKET, FRONT	KB 081 - 211
39	100189056	JACKET, FRONT	KB 286
40	100149867	JACKET, LEFT SIDE	KB 081
40	100149868	JACKET, LEFT SIDE	KB 106
40	100149869	JACKET, LEFT SIDE	KB 151
40	100149870	JACKET, LEFT SIDE	KB 211
40	100149871	JACKET, LEFT SIDE	KB 286
41	100150215	JACKET, RIGHT SIDE	KB 081 - 106
41	100150222	JACKET, RIGHT SIDE	KB 151
41	100150233	JACKET, RIGHT SIDE	KB 211
41	100150244	JACKET, RIGHT SIDE	KB 286

PLEASE HAVE MODEL AND SERIAL NUMBER WHEN ORDERING PARTS

©-08/17-Printed in U.S.A.