NO.	71149
ISSUED:	AUG. 30, 1999
REVISED:	APRIL 4, 2001

HOSHIZAKI AMERICA, INC.

HOSHIZAKI
MODULAR CRESCENT CUBER

MODELS

KML-450MAF
KML-450MWF
KML-450MAH
KML-450MWH

PARTS LIST

KML-450MAF	J-0	Jan., 1999
	K-0	Dec., 1999
	L-0	Dec., 2000
KML-450MWF	J-0	Jan., 1999
	K-0	Dec., 1999
	L-0	Dec., 2000
KML-450MAH	L-0	March, 2001
	L-1	March, 2001
KML-450MWH	L-0	March, 2001

MATERIAL ABBREVIATIONS

ALUMINUM

AL	=	Aluminum

COPPER

CU	=	Copper

PLASTIC

ABS	=	Acrylonitrile -butadiene - styrene
AC	=	Polyacetal
EVA	=	Ethylene vinyl acetate
PA	=	Polyamide = Nylon
PC	=	Polycarbonate
PE	=	Polyethylene
PES	=	Polyester
PETP	=	Polyethylene terephthalate = Tetlon
PP	=	Polypropylene
PS	=	Polystyrene
PIFE	=	Polytetrafluoroethylene = Teflon
PUR	=	Polyurethane
PVC	=	Polyvinyl chloride

RUBBER

VN	=	Vinyl Nitrile
EPDM	=	EP rubber
NBR	=	Nitrile butadiene rubber
NR	=	Natural rubber
NP	=	Neoprene
SI.R	=	Silicone rubber
SY.R	=	Synthetic rubber
EPH	=	Epichlorohydrin

STEEL

GS	=	Galvanized steel
SS	=	Stainless steel
PS	=	Plated steel
PAS	=	Primed steel

AUXILIARY CODE

Ex.1 K-0

- 0: Parts are the same as in the preceding year.
- K: "K" is the tenth in alphabetical order with "I" skipped. So, "K" indicates "2000".

Ex.2 L-0

- L: "L" is the next in alphabetical order. So, "L" indicates "2001".

Ex.3 L-1

- 1: Each time a part is replaced by a non-interchangeable part during a year, this number advances.

(Note) - = Part deleted.

x = Part deleted and replaced by interchangeable "o" part.

o = New part for "x" in the same auxiliary code.

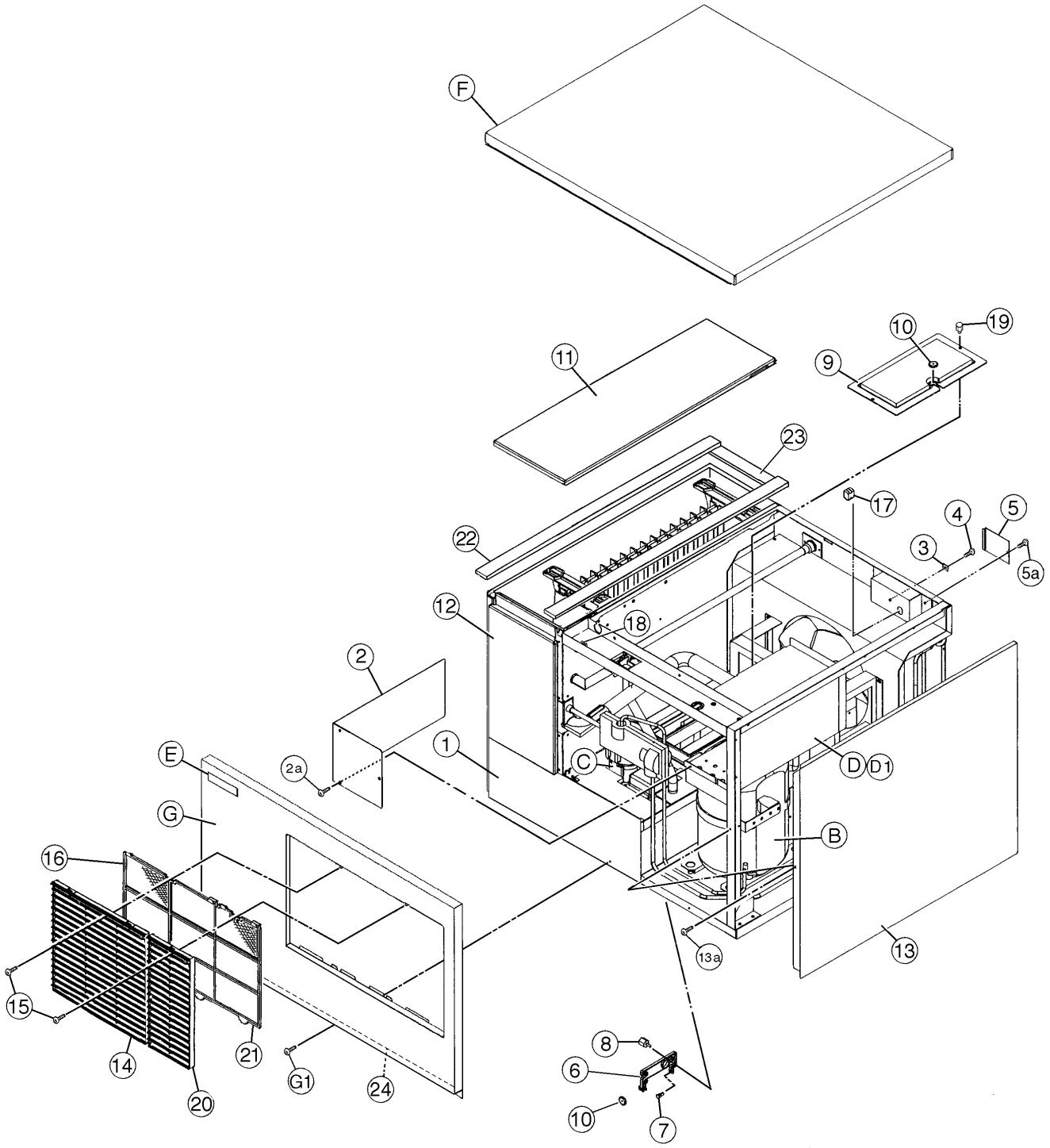
F
11
10
19
9
23
17
4
5
3
5a
22
12
18
2
1
E
2a
C
D
D1
G
B
16
13a
13
15
14
21
G1
24
20
8
6
10
7

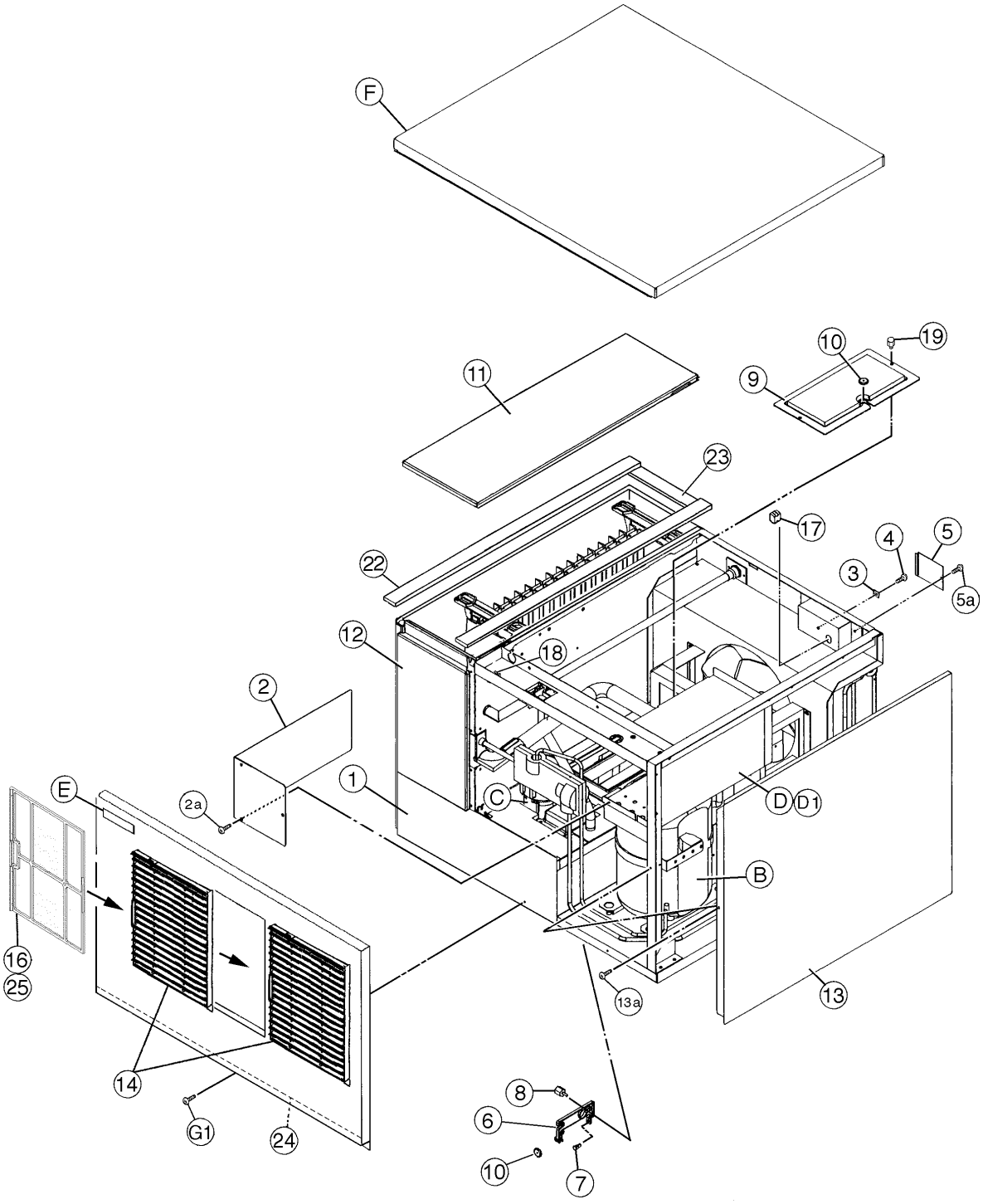
F
11
10
19
9
23
17
4
5
3
5a
22
12
18
2
1
E
2a
C
D
D1
B
16
25
13a
13
14
G1
24
8
6
10
7

MODEL: KML-450MAF, KML-450MAH TITLE: A. ICE CUBER ASSEMBLY								
INDEX NO.	DESCRIPTION	MATERIAL OR MODEL NUMBER	PART NUMBER	REQUIRED NUMBER				
				MAF		MAH		
				J-0 K-0	L-0	L-0	L-1	
B	REFRIGERATION CIRCUIT	-	1A0412A01	1	1	1	1	
C	WATER CIRCUIT	-	1A0438A01	1	1	1	1	
D	CONT. BOX ASSEMBLY	-	2A1519A01	1	1			
		-	2A2154A01			1	1	
D1	T2 SCREW	4X8	7P31-0408	3	3	3	3	
E	LABEL LOCATION	-	3A1339A01	1	1			
		-	3A1922A01			1	1	
F	TOP PANEL ASSEMBLY	-	3A0674A01	1	1			
		-	3A1862A01			1	1	
G	FRONT PANEL	-	3A1273A01	1	1			
		-	3A1859A01			1	1	
G1	TRUSS HEAD SCREW	4X8, SS	7C32-0408	1	1	1	1	
1	EVAP. CASE	HS-1014	2A1449G01	1	1			
		-	2A2113G01			1	1	
2	CONT. BOX COVER	GS	3A0594-01	1	1			
		GS	3A1828-01			1	1	
2a	T2 SCREW	4X8	7P31-0408	3	3	3	3	
3	SQUARE WASHER	BRASS	433537-02	1	1	1	1	
4	SCREW - GROUNDING	BRASS	433304-02	1	1	1	1	
5	JUNCTION BOX COVER	GS	433410-01	1	1	1	1	
5a	T2 SCREW	4X8	7P31-0408	1	1	1	1	
6	THERMOSTAT EXTENSION BRACKET	SS	4A1722-01	1	1	1	1	
7	SPACER	PE	443545-01	1	1	1	1	
8	THUMBSCREW	SS, ABS	415949G03	2	2	2	2	
9	BIN CONT. COVER	GS	3A0664G01	1	1	1	1	
10	CAPILLARY RING	EP RUBBER	425307-01	2	2	2	2	
11	TOP INSULATION	PP	215730G01	1	1	1	1	
12	FRONT INSULATION	PP	2A0664G01	1	1	1	1	

MODEL: **KML-450MAF, KML-450MAH** TITLE: **A. ICE CUBER ASSEMBLY**								
INDEX NO.	DESCRIPTION	MATERIAL OR MODEL NUMBER	PART NUMBER	REQUIRED NUMBER				
				MAF		MAH		
				J-0 K-0	L-0	L-0	L-1	
13	SIDE PANEL (R)	SS	2A1456G01	1	1			
		SS	2A2111G01			1	1	
13a	T2 SCREW	4X8, SS	7P32-0408	1	1	1	1	
14	LOUVER (B)	ABS	103121-05	1	1			
		-	1A0548-01			2	2	
15	TAPPING SCREW (BLACK)	STEEL, 4X8	433954-01	2	2	-		
16	AIR FILTER (B)	ABS	208283G03	1	1			
		-	2A2063G01			2	2	
17	BUSHING	SR-34-2	420472-05	1	1	1	1	
18	WIRE SADDLE	VWS4238-C	4A0338-02	2	2	2	2	
19	THUMBSCREW	SS, ABS	415949G04	2	2	2	2	
20	LOUVER (C)	ABS	103122-03	1	1	-		
21	AIR FILTER (C)	ABS	208284G01	1	1	-		
22	GASKET	L=655	4A0808L02	2	2	2	2	
23	GASKET	L=190	4A0808L02	1	1	1	1	
24	GASKET	L=762	4A0808L02		1	1	1	
25	PUSH RETAINER	-	4A2414-01			6	6	

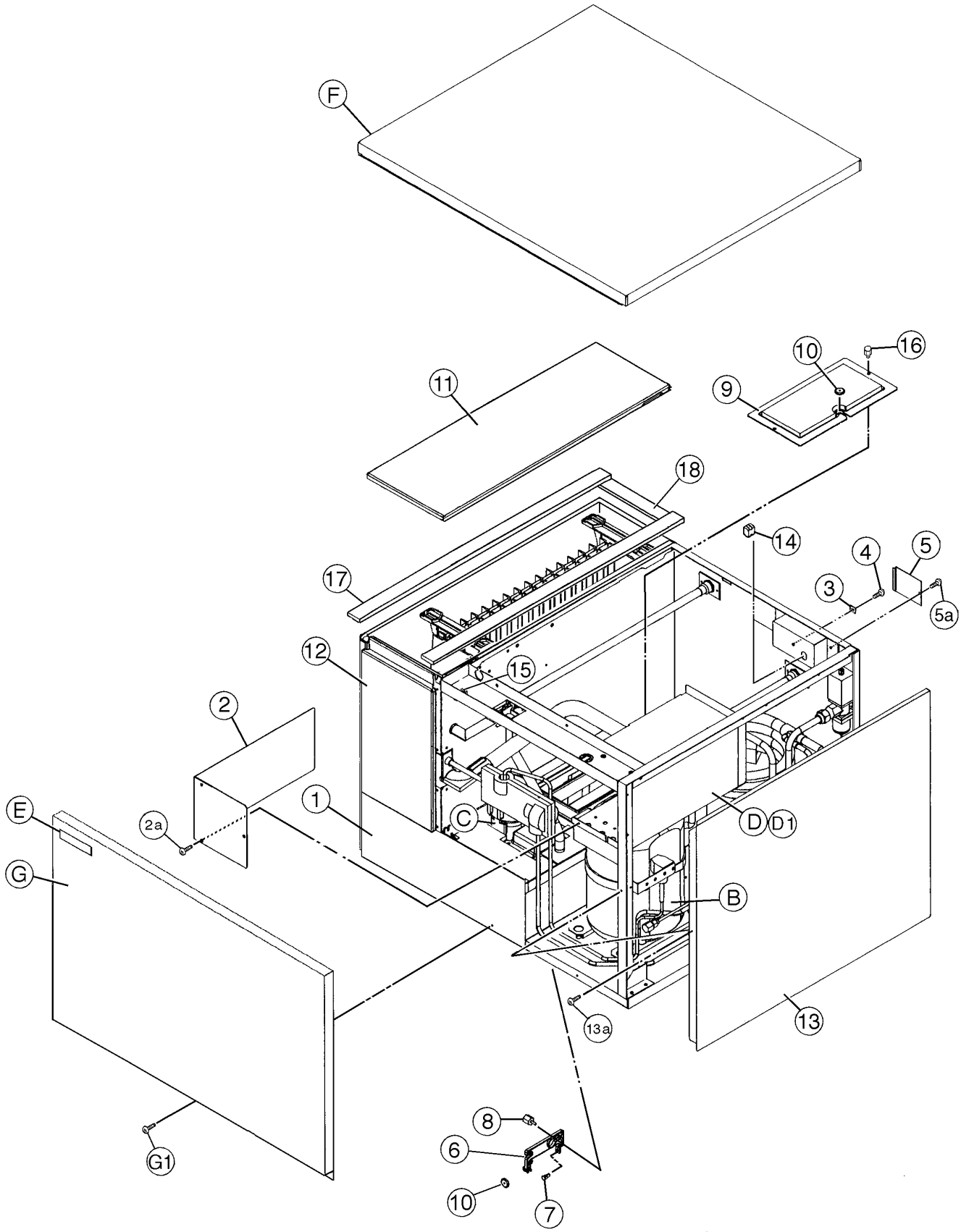
F
11
10
16
9
18
14
4
5
3
5a
17
12
15
2
1
E
2a
C
D
D1
G
B
13a
13
8
6
10
7
G1

MODEL: KML-450MWF, KML-450MWH TITLE: A. ICE CUBER ASSEMBLY								
INDEX NO.	DESCRIPTION	MATERIAL OR MODEL NUMBER	PART NUMBER	REQUIRED NUMBER				
				MWF		MWH		
				J-0 K-0	L-0	L-0		
B	REFRIGERATION CIRCUIT	-	1A0413A02	1	1	1		
C	WATER CIRCUIT	-	1A0438A01	1	1	1		
D	CONT. BOX ASSEMBLY	-	2A1519A02	1	1			
		-	2A2154A02			1		
D1	T2 SCREW	4X8	7P31-0408	3	3	3		
E	LABEL LOCATION	-	3A1341A01	1	1			
		-	3A1923A01			1		
F	TOP PANEL ASSY	-	3A0674A01	1	1			
		-	3A1862A01			1		
G	FRONT PANEL	-	3A1273A02	1	1			
		-	3A1859A02			1		
G1	TRUSS HEAD SCREW	4X8, SS	7C32-0408	2	2	2		
1	EVAP. CASE	HS-1014	2A1449G01	1	1			
		-	2A2113G01			1		
2	CONT. BOX COVER	GS	3A0594-01	1	1			
		GS	3A1828-01			1		
2a	T2 SCREW	4X8	7C31-0408	3	3	3		
3	SQUARE WASHER	BRASS	433537-02	1	1	1		
4	SCREW - GROUNDING	BRASS	433304-02	1	1	1		
5	JUNCTION BOX COVER	GS	433410-01	1	1	1		
5a	T2 SCREW	4X8	7P31-0408	1	1	1		
6	THERMOSTAT EXTENSION BRACKET	SS	4A1722-01	1	1	1		
7	SPACER	PE	443545-01	1	1	1		
8	THUMBSCREW	SS, ABS	415949G03	2	2	2		
9	BIN CONT COVER	GS	3A0664G01	1	1	1		
10	CAPILLARY RING	EP RUBBER	425307-01	2	2	2		
11	TOP INSULATION	PP	215730G01	1	1	1		
12	FRONT INSULATION	PP	2A0664G01	1	1	1		

MODEL: KML-450MWF, KML-450MWH TITLE: A. ICE CUBER ASSEMBLY								
INDEX NO.	DESCRIPTION	MATERIAL OR MODEL NUMBER	PART NUMBER	REQUIRED NUMBER				
				MWF		MWH		
				J-0 K-0	L-0	L-0		
13	SIDE PANEL (R)	SS	2A1456G01	1	1	1		
		SS	2A2111G01			1		
13a	T2 SCREW	4X8, SS	7P32-0408	1	1	1		
14	BUSHING	SR-30-1	420472-03	1	1	1		
15	WIRE SADDLE	VWS4238-C	4A0338-02	2	2	2		
16	THUMBSCREW	SS, ABS	415949G04	2	2	2		
17	GASKET	L=655	4A0808L02	2	2	2		
18	GASKET	L=190	4A0808L02	1	1	1		

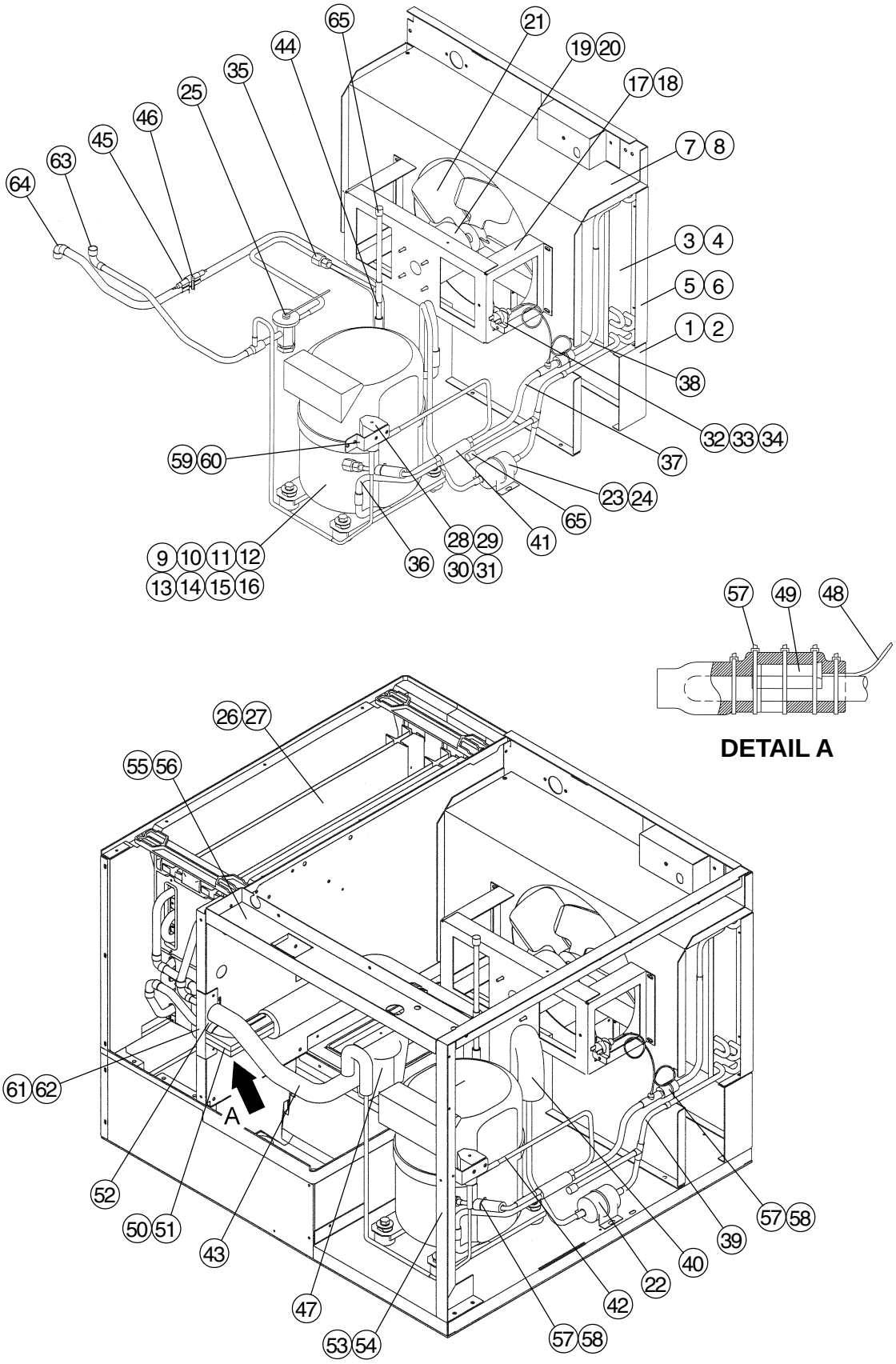
65
21
19 20
44
35
17 18
25
46
45
7 8
63
64
3 4
5 6
1 2
38
32 33 34
37
59 60
23 24
65
41
28 29
30 31
36
9 10 11 12
13 14 15 16
57 49 48
DETAIL A
26 27
55 56
61 62
A
52
50 51
43
47
53 54
57 58
42
22
40
39
57 58

MODEL: KML-450MAF, KML-450MAH TITLE: B. REFRIGERATION CIRCUIT								
INDEX NO.	DESCRIPTION	MATERIAL OR MODEL NUMBER	PART NUMBER	REQUIRED NUMBER				
				MAF		MAH		
				J-0 K-0	L-0	L-0	L-1	
1	COND. SUPPORT	GS	3A0589-01	1	1	1	1	
2	T2 SCREW	4X8	7P31-0408	5	5	5	5	
3	CONDENSER	S-0799	2A0640-01	1	1	1	1	
4	T2 SCREW	4X8	7P31-0408	3	3	3	3	
5	BARRIER	GS	4A0932-01	1	1	1	1	
6	T2 SCREW	4X8	7P31-0408	2	2	2	2	
7	SHROUD	GS	3A0597G01	1	1	1	1	
8	T2 SCREW	4X8	7P31-0408	5	5	5	5	
9	COMPRESSOR	RS55C2E-CAA-219	4A1843-01	1	1	1	1	
10	TERMINAL COVER	COMP. ACCESSORY	4A1843F01	1	1	1	1	
11	SPRING CLIP	COMP. ACCESSORY	4A1843F02	1	1	1	1	
12	PROTECTOR	COMP. ACCESSORY	4A1877-01	1	1	1	1	
13	PROTECTOR HOLDER	COMP. ACCESSORY	4A1843F04	1	1	1	1	
14	BOLT	8X45	437889-01	4	4	4	4	
15	SPACER	027-0072-02	434404-01	1	1	1	1	
16	GROMMET	527-0039-04	434403-01	4	4	4	4	
17	FAN MOTOR BRACKET	GS	2A0181-01	1	1	1	1	
18	HEX HEAD BOLT W/WASHER (LF)	5X12	7B0130512	4	4	4	4	
19	FAN MOTOR	U90B1 7190-1031	440911-01	1	1	1	1	
20	SELF LOCKING NUT	NO. 8-32	7N21I0832	4	4	4	4	
21	FAN BLADE	AD10CW32	444898-01	1	1	1	1	
22	DRIER	CW-0325-S	4A1413-01	1	1	1	1	
23	DRIER BRACKET	GS	4A0807-01	1	1	1	1	
24	T2 SCREW	4X8	7P31-0408	2	2	2	2	
25	EXP. VALVE	AN ¾ SW65	4A1870-01	1	1	1	1	
26	EVAPORATOR ASSY	-	2A0717G01	1	1	1	1	
27	T2 SCREW	4X16	7P31-0416	4	4	4	4	
28	VALVE BODY	70	440352-01	1	1	1	1	
29	COIL-VALVE	ABS-25-1-HD-2	440353-01	1	1	1	1	

MODEL: KML-450MAF, KML-450MAH TITLE: B. REFRIGERATION CIRCUIT								
INDEX NO.	DESCRIPTION	MATERIAL OR MODEL NUMBER	PART NUMBER	REQUIRED NUMBER				
				MAF		MAH		
				J-0 K-0	L-0	L-0	L-1	
30	BOLT	-	440353F01	1	1	1	1	
31	TRUSS HEAD SCREW	4X8	7C31-0408	2	2	2	2	
32	PRESSURE SWITCH	ACB-1UB09	433441-07	1	1	1	1	
33	PRESSURE SWITCH BRACKET	GS	434938-01	1	1	1	1	
34	T2 SCREW	4X8	7P31-0408	1	1	1	1	
35	ACCESS VALVE	FV180D001	446715-01	x2				
		-	457729-01	o2	2	2	2	
36	COPPER TUBE (A) - HIGH SIDE	COPPER	4A1846-01	1	1	1	1	
37	COPPER TUBE (B) - HIGH SIDE	COPPER	3A1317-01	1	1	1	1	
38	COPPER TUBE (C) - HIGH SIDE	COPPER	3A1316G01	1	1	1	1	
39	COPPER TUBE (D) - HIGH SIDE	COPPER	3A1311G01	1	1	1	1	
40	HEAT EXCHANGER	COPPER	2A1498G01	1	1	1	1	
41	STRAINER	-	4A0397-01	1	1	1	1	
42	COPPER TUBE (A) - HOT GAS	COPPER	4A1878-01	1	1	1	1	
43	COPPER TUBE (B) - HOT GAS	COPPER	2A1505G01	1	1	1	1	
44	COPPER TUBE (A) – ACCESS VALVE	COPPER	3A1323G01	1	1	1	1	
45	HOLDER / EXP. VALVE – 1/2	SS	3A0112-01	1	1	1	1	
46	CLAMP	SS	443461-02	1	1	1	1	
47	EXPANSION VALVE COVER	PE FOAM	4A1168-01	1	1	1	1	
48	THERMISTOR	-	429006-03	1	1	1	1	
49	HOLDER - THERMISTOR	COPPER	427430-01	1	1	1	1	
50	INSULATION – THERMISTOR (A)	PE FOAM	439368-01	1	1	1	1	
51	INSULATION – THERMISTOR (B)	PE FOAM	439368-02	1	1	1	1	
52	INSULATED RUBBER TUBE	EPDM	4A1008G01	1	1	1	1	
53	FRAME (A)	GS	2A0645-01	1	1	1	1	
54	T2 SCREW	4X8	7P31-0408	4	4	4	4	
55	FRAME (B)	GS	3A0595-01	1	1	1	1	
56	T2 SCREW	4X8	7P31-0408	4	4	4	4	
57	CABLE TIE	CV-200	7920-0010	14	14	14	14	

MODEL: KML-450MAF, KML-450MAH TITLE: B. REFRIGERATION CIRCUIT								
INDEX NO.	DESCRIPTION	MATERIAL OR MODEL NUMBER	PART NUMBER	REQUIRED NUMBER				
				MAF		MAH		
				J-0 K-0	L-0	L-0	L-1	
58	INSULATION TUBE	L=30	7762-1020	2	2	2	2	
59	LINE VALVE BRACKET	GS	4A1406-01	1	1	1	1	
60	T2 SCREW	4X8	7P31-0408	2	2	2	2	
61	INSULATION HOLDER	SS	3A1084-01	1	1	1	1	
62	T2 SCREW	4X8	7P31-0408	2	2	2	2	
63	ELBOW	COPPER	4A1059-01	1	1	1	1	
64	ELBOW	COPPER	417395-03	1	1	1	1	
65	ENDCAP	-	4A1413F01	2	2	2	2	

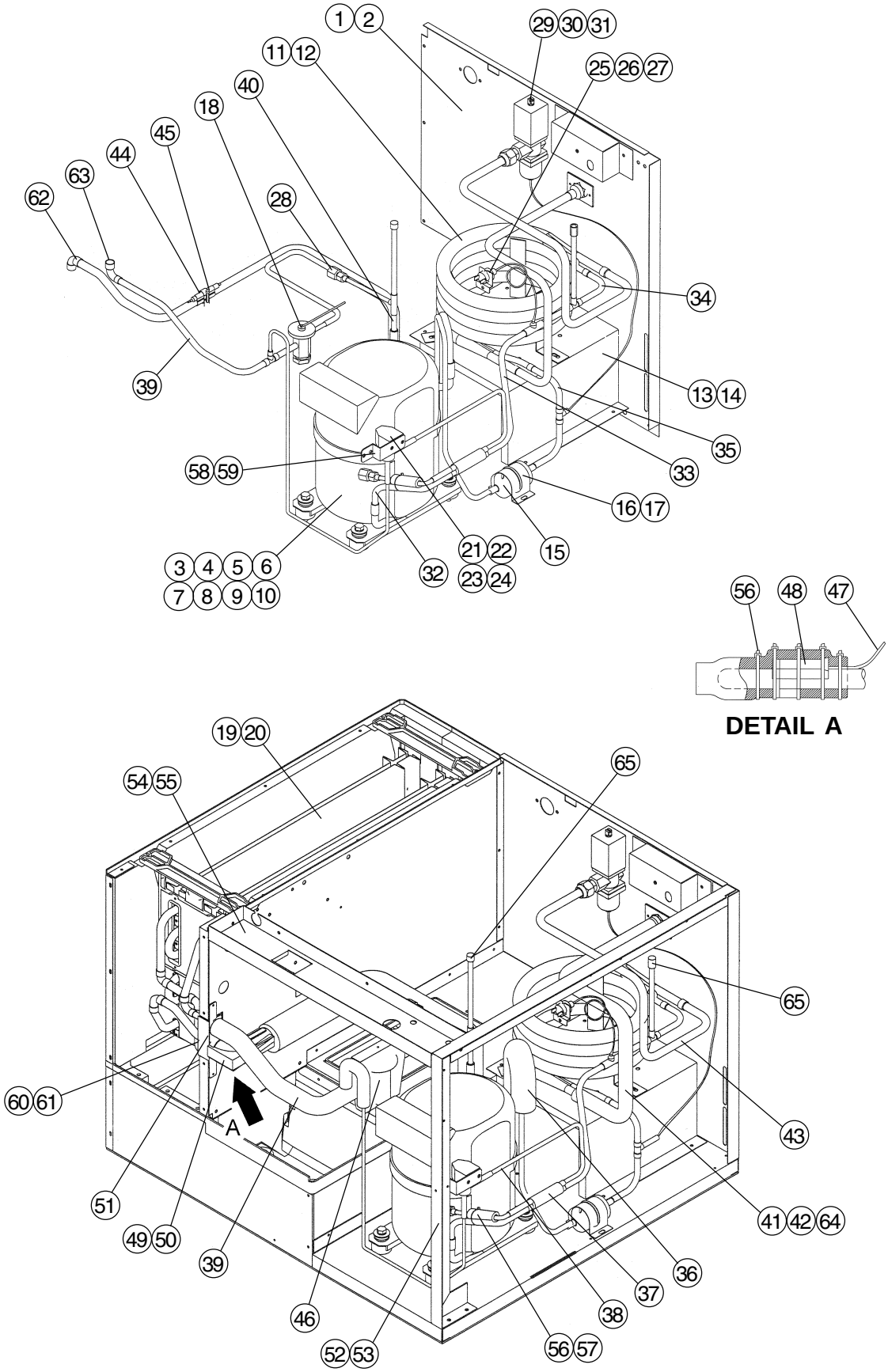
1 2
29 30 31
11 12
25 26 27
40
18
45
44
63
62
28
34
39
13 14
35
33
58 59
16 17
21 22
15
3 4 5 6
7 8 9 10
32
23 24
56 48 47
DETAIL A
19 20
65
54 55
65
60 61
A
43
51
41 42 64
49 50
39
36
37
38
46
56 57
52 53

MODEL: KML-450MWF, KML-450MWH TITLE: B. REFRIGERATION CIRCUIT								
INDEX NO.	DESCRIPTION	MATERIAL OR MODEL NUMBER	PART NUMBER	REQUIRED NUMBER				
				MWF		MWH		
				J-0 K-0	L-0	L-0	L-1	
1	REAR PANEL (B)	GS	3A0630G03	1	1	1	1	
2	T2 SCREW	4X8	7P31-0408	9	9	9	9	
3	COMPRESSOR	RS55C2E-CAA-219	4A1843-01	1	1	1	1	
4	TERMINAL COVER	COMP. ACCESSORY	4A1843F01	1	1	1	1	
5	SPRING CLIP	COMP. ACCESSORY	4A1843F02	1	1	1	1	
6	PROTECTOR	COMP. ACCESSORY	4A1877-01	1	1	1	1	
7	PROTECTOR HOLDER	COMP. ACCESSORY	41843F04	1	1	1	1	
8	BOLT	8X45	437889-01	4	4	4	4	
9	SPACER	027-0072-02	434404-01	4	4	4	4	
10	GROMMET	527-0039-04	434403-01	4	4	4	4	
11	CONDENSER	H-1 ¼-I	2A1429-01	1	1	1	1	
12	HEX HEAD BOLT W/WASHER (LF)	4X12	7B0230412	3	3	3	3	
13	COND. SUPPORT	GS	2A1470-01	1	1	1	1	
14	T2 SCREW	4X8	7P31-0408	4	4	4	4	
15	DRIER	CW-0325-S	4A1413-01	1	1	1	1	
16	DRIER BRACKET	GS	4A0807-01	1	1	1	1	
17	T2 SCREW	4X8	7P31-0408	2	2	2	2	
18	EXP. VALVE	AN ¾ SW65	4A1870-01	1	1	1	1	
19	EVAPORATOR ASSY	-	2A0717G01	1	1	1	1	
20	T2 SCREW	SS, 4X16	7P32-0416	4	4	4	4	
21	VALVE BODY	70	440352-01	1	1	1	1	
22	COIL VALVE	ABS-25-1-HD-2	440353-01	1	1	1	1	
23	BOLT	-	440353F01	1	1	1	1	
24	TRUSS HEAD SCREW	4X8	7C31-0408	2	2	2	2	
25	PRESSURE SWITCH	ACB-1UB04	433441-05	1	1	1	1	
26	PRESSURE SWITCH BRACKET	GS	434938-01	1	1	1	1	
27	T2 SCREW	4X8	7P31-0408	1	1	1	1	

MODEL: **KML-450MWF, KML-450MWH** TITLE: **B. REFRIGERATION CIRCUIT**								
INDEX NO.	DESCRIPTION	MATERIAL OR MODEL NUMBER	PART NUMBER	REQUIRED NUMBER				
				MWF		MWH		
				J-0 K-0	L-0	L-0	L-1	
28	ACCESS VALVE	FV18OD001	446715-01	x2				
		-	457729-01	o2	2	2	2	
29	WATER REGULATOR	V46DA-3	4A0911-03	1	1	1	1	
30	TRUSS HEAD SCREW	4X6	7C31-0406	2	2	2	2	
31	MALE CONNECTOR	BRASS	4A1087-01	1	1	1	1	
32	COPPER TUBE (A)-HIGH SIDE	COPPER	4A1846-01	1	1	1	1	
33	COPPER TUBE (B)-HIGH SIDE	COPPER	4A1859-01	1	1	1	1	
34	COPPER TUBE (C)-HIGH SIDE	COPPER	3A1282G01	1	1	1	1	
35	COPPER TUBE (D)-HIGH SIDE	COPPER	3A1288G01	1	1	1	1	
36	HEAT EXCHANGER	COPPER	2A1498G01	1	1	1	1	
37	STRAINER	-	4A0397-01	1	1	1	1	
38	COPPER TUBE (A)-HOT GAS	COPPER	4A1878-01	1	1	1	1	
39	COPPER TUBE (B)-HOT GAS	COPPER	2A1502G01	1	1	1	1	
40	COPPER TUBE (A)-ACCESS VALVE	COPPER	3A1323G01	1	1	1	1	
41	COPPER TUBE (A)	COPPER	3A1519G01	1	1	1	1	
42	T2 SCREW	4X8	7P31-0408	2	2	2	2	
43	COPPER TUBE (B)	COPPER	3A1453G01	1	1	1	1	
44	HOLDER/EXP VALVE-1/2	SS	3A0112-01	1	1	1	1	
45	CLAMP	SS	443461-01	1	1	1	1	
46	EXPANSION VALVE COVER	PE FOAM	4A1168-01	1	1	1	1	
47	THERMISTOR	-	429006-03	1	1	1	1	
48	HOLDER-THERMISTOR	COPPER	427430-01	1	1	1	1	
49	INSULATION-THERMISTOR (A)	PE FOAM	439368-01	1	1	1	1	
50	INSULATION-THERMISTOR (B)	PE FOAM	439368-02	1	1	1	1	
51	INSULATED RUBBER TUBE	EPDM	4A1008G01	1	1	1	1	
52	FRAME (A)	GS	2A0645-01	1	1	1	1	
53	T2 SCREW	4X8	7P31-0408	4	4	4	4	
54	FRAME (B)	GS	3A0595-01	1	1	1	1	
55	T2 SCREW	4X8	7P31-0408	4	4	4	4	

MODEL: **KML-450MWF, KML-450MWH** TITLE: **B. REFRIGERATION CIRCUIT**								
INDEX NO.	DESCRIPTION	MATERIAL OR MODEL NUMBER	PART NUMBER	REQUIRED NUMBER				
				MWF		MWH		
				J-0 K-0	L-0	L-0	L-1	
56	CABLE TIE	CV-200	7920-010	14	14	14	14	
57	INSULATION TUBE	L=30	7762-1020	2	2	2	2	
58	LINE VALVE BRACKET	GS	4A1406-01	1	1	1	1	
59	T2 SCREW	4X8	7P31-0408	2	2	2	2	
60	INSULATION HOLDER	SS	3A1084-01	1	1	1	1	
61	T2 SCREW	4X8	7P31-0408	2	2	2	2	
62	ELBOW	COPPER	4A1059-01	1	1	1	1	
63	ELBOW	COPPER	417395-03	1	1	1	1	
64	INSULATION TUBE	L=670	7762-1323	1	1	1	1	
65	ENDCAP	-	4A1413F01	2	2	2	2	

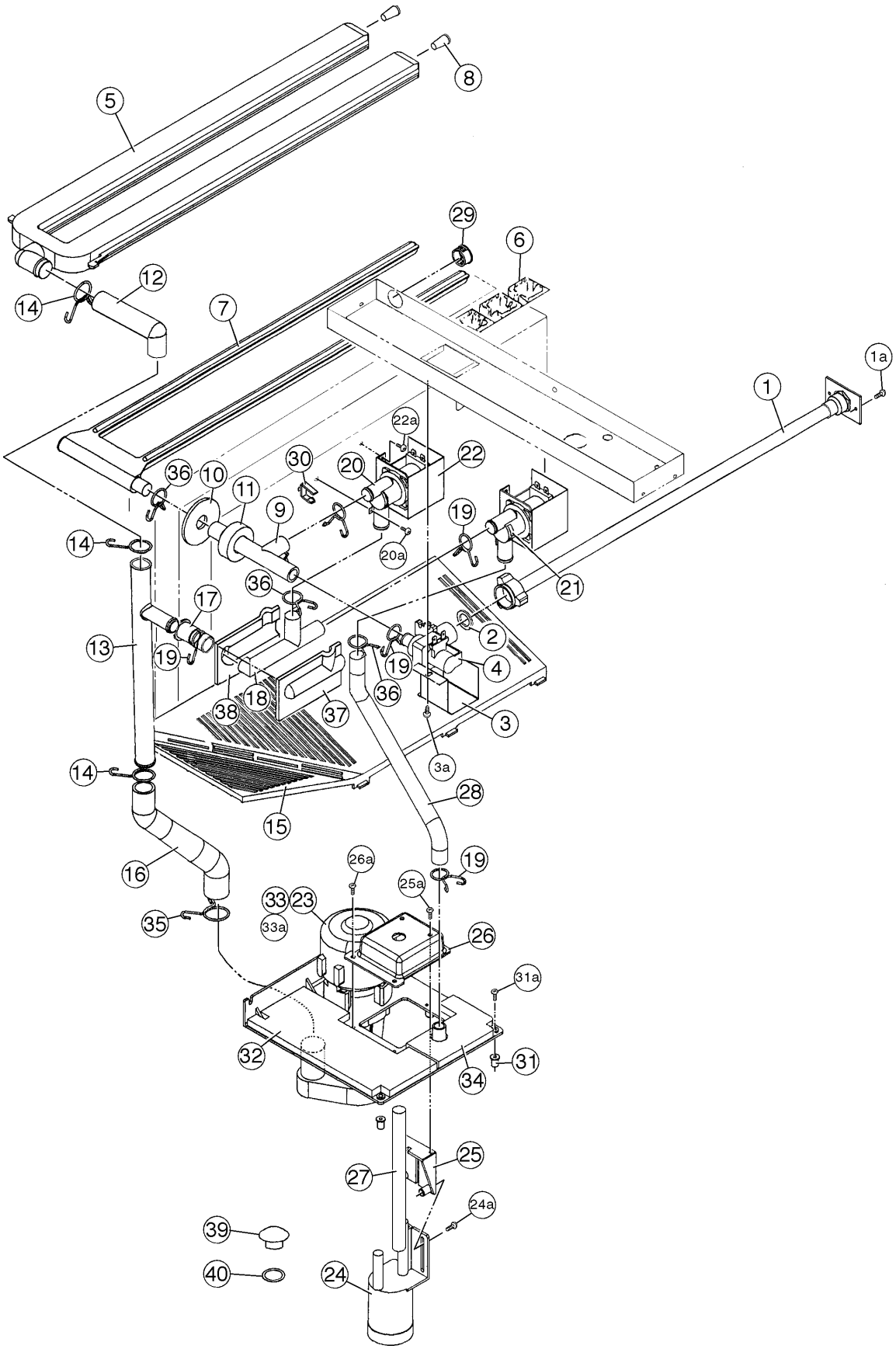
5
8
29
6
12
14
7
1a
1
22a
22
30
20
36
10
11
9
19
20a
21
14
36
17
2
13
19
19
4
18
36
38
37
3
3a
14
28
15
16
26a
19
25a
33
23
33a
35
26
31a
32
31
34
25
27
24a
39
40
24

MODEL: KML-450MAF, MWF, MAH, MWH TITLE: C. WATER CIRCUIT								
INDEX NO.	DESCRIPTION	MATERIAL OR MODEL NUMBER	PART NUMBER	REQUIRED NUMBER				
				M_F		M_H		
				J-0 K-0	L-0	L-0	L-1	
1	WATER SUPPLY PIPE	COPPER	4A0768G04	1	1	1	1	
1a	T2 SCREW	4X8	7P31-0408	2	2	2	2	
2	RUBBER GASKET	NR	413854-03	1	1	1	1	
3	WATER VALVE BRACKET	GS	321443-01	1	1	1	1	
3a	T2 SCREW	4X8	7P31-0408	1	1	1	1	
4	WATER VALVE	J248-072	3U0111-04	1	1	1	1	
5	SPRAY TUBE	PE	1A0260-02	1	1	1	1	
6	SPRAY GUIDE (A)	PE	208586-01	6	6	6	6	
7	WATER SUPPLY TUBE	PE	2A0079-01	1	1	1	1	
8	PLUG	EPDM	4A0176-01	2	2	2	2	
9	WATER SUPPLY TEE	SANTOPRENE	4A1006-01	1	1	1	1	
10	FLANGE	EPDM	439267-01	1	1	1	1	
11	INSULATION (E)	PE FOAM	4A0392-01	1	1	1	1	
12	ELBOW	SANTOPRENE	4A0393-01	1	1	1	1	
13	CONNECTING PIPE	PE	3A1335-01	1	1	1	1	
14	HOSE CLAMP	SS, 25 mm	427443-03	3	3	3	3	
15	CUBE GUIDE (A)	ABS	2A0660-01	1	1	1	1	
16	PUMP HOSE	EPDM	4A1007-01	1	1	1	1	
17	RUBBER RING	EPDM	4A1004-01	1	1	1	1	
18	BYPASS HOSE	SANTOPRENE	4A1005-01	1	1	1	1	
19	HOSE CLAMP	SS, 18 mm	427443-05	5	5	5	5	
20	SOLENOID VALVE	207CB-GS1873	439322-01	2	2	2	2	
20a	T2 SCREW	4X8	7P31-0408	4	4	4	4	
21	ARROW LABEL	PES	4A0096-01	1	1	1	1	
22	SOLENOID COVER	GS	4A0996-01	2	2	2	2	
22a	T2 SCREW	4X8	7P31-0408	4	4	4	4	
23	PUMP	-	2A0749-01	1	1	1	1	

MODEL: KML-450MAF, MWF, MAH, MWH TITLE: C. WATER CIRCUIT								
INDEX NO.	DESCRIPTION	MATERIAL OR MODEL NUMBER	PART NUMBER	REQUIRED NUMBER				
				M_F		M_H		
				J-0 K-0	L-0	L-0	L-1	
24a	T2 SCREW	4X8, SS	7P32-0408	2	2	2	2	
25	FLOAT SWITCH BRACKET	ABS	327757-01	1	1	1	1	
25a	T2 SCREW	4X12, SS	7P32-0412	2	2	2	2	
26	FLOAT SWITCH COVER	ABS	3A0665-01	1	1	1	1	
26a	T2 SCREW	4X12, SS	7P32-0412	2	2	2	2	
27	VINYL HOSE	L=150	7716-1216	1	1	1	1	
28	SILICONE HOSE	L=295	7730-1519	1	x1			
	VINYL HOSE	L=295	7716-1519		o1	1	1	
29	BUSHING	OCB-875	428394-04	1	1	1	1	
30	WIRE SADDLE	VWS4238-C	4A0338-02	8	8	8	8	
31	WELL NUT	347011	4A1070-01	2	2	2	2	
31a	TRUSS HEAD SCREW	4X16, SS	7C32-0416	4	4	4	4	
32	INSULATION (A) – PUMP BRACKET	PE FOAM	4A1052-01	1	1	1	1	
33	TOOTH WASHER	ZINC, M4	7R21-0400	1	1	1	1	
33a	TRUSS HEAD SCREW	4X16	7C31-0416	1	1	1	1	
34	INSULATION (B) – PUMP BRACKET	PE FOAM	4A1053-01	1	1	1	1	
35	HOSE CLAMP	SS, 27 mm	427443-08	1	1	1	1	
36	HOSE CLAMP	SS. 20 mm	427443-06	3	3	3	3	
37	INSULATION (A1) – BYPASS HOSE	NP	4A1259-01	1	1	1	1	
38	INSULATION (A2) – BYPASS HOSE	NP	4A1260-01	1	1	1	1	
39	DRAIN	POLYACETAL	309246-01	1	1	1	1	
40	O-RING	1AP15	7611-P015	1	1	1	1	

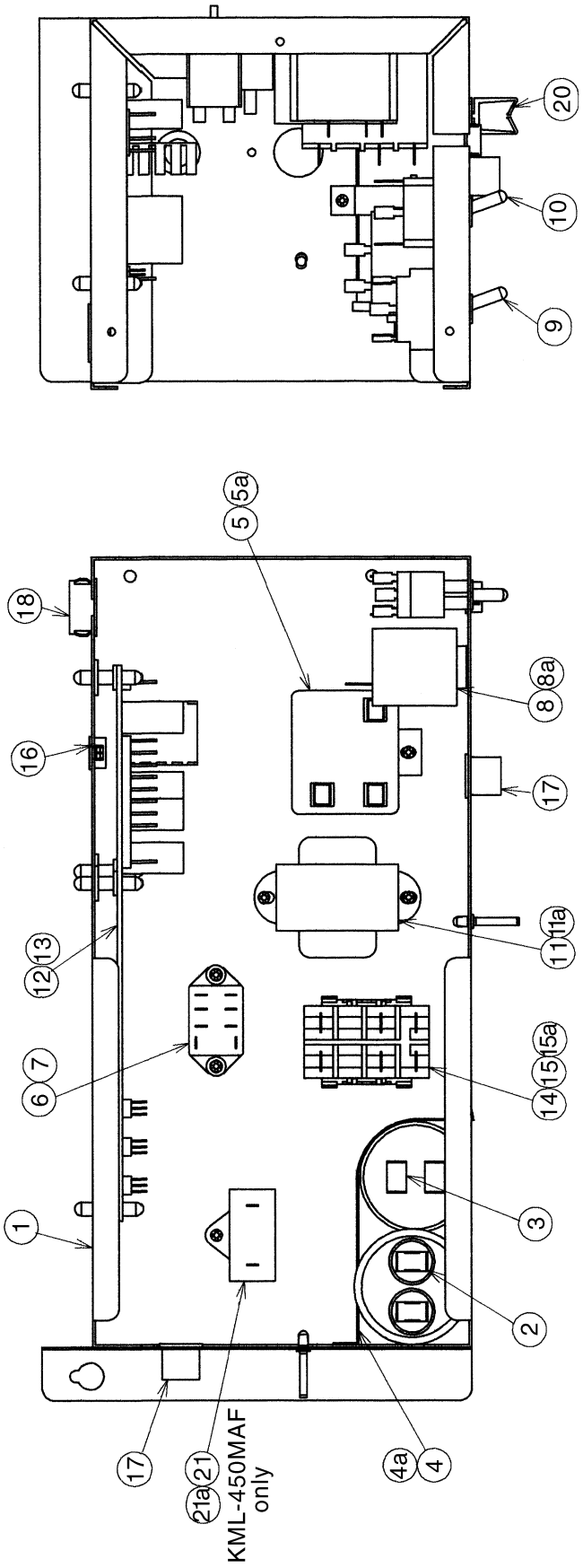
20
10
9
5
5a
18
8
8a
16
17
11
11a
12
13
6
7
14
15
15a
1
3
2
17
21
21a
KML-450MAF
only
4a
4
19
16
20

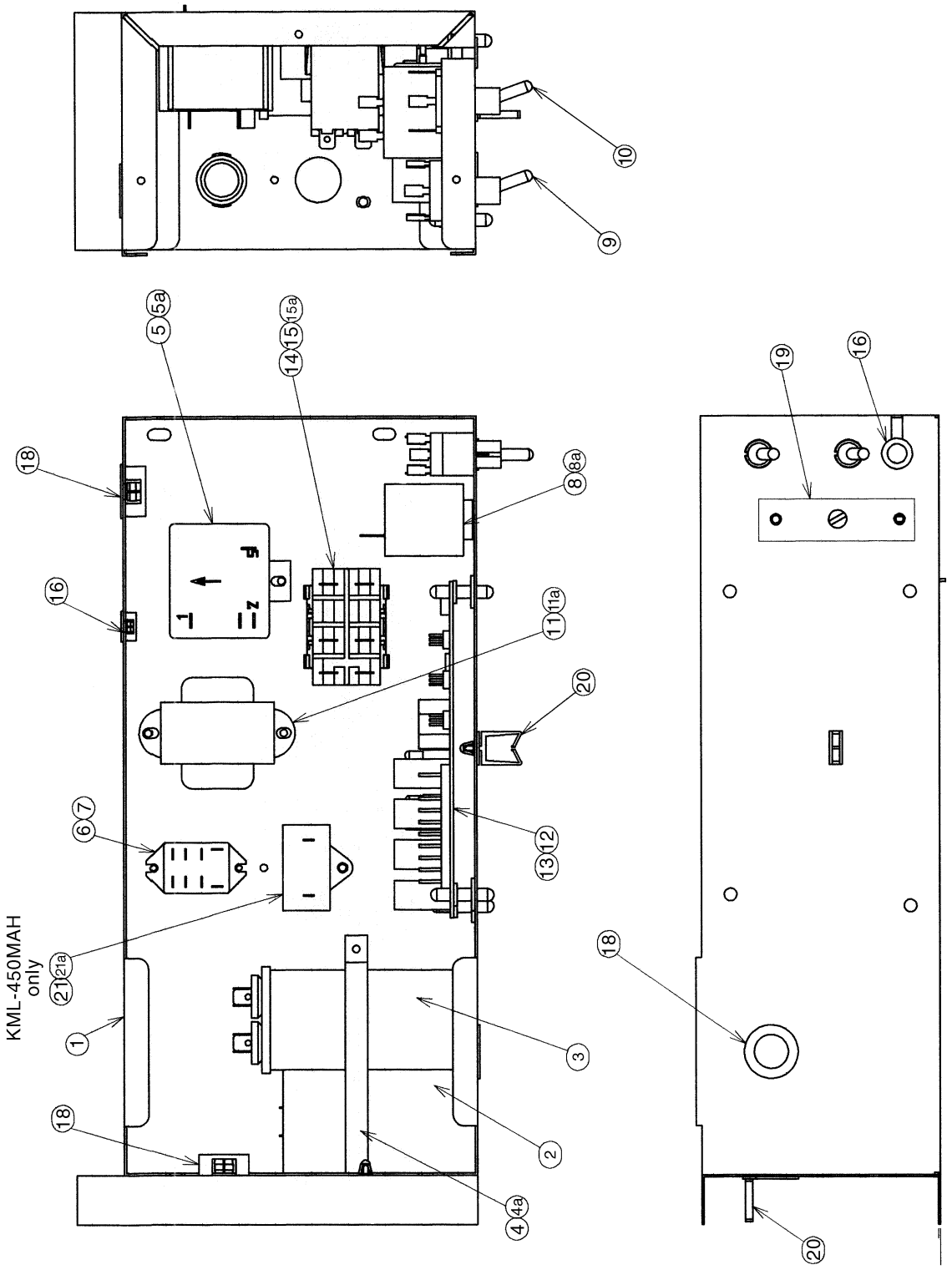
10
9
5
5a
14
15
15a
18
8
8a
16
11
11a
20
6
7
13
12
KML-450MAH
only
21
21a
1
3
2
4
4a
19

MODEL: **KML-450MAF, KML-450MAH** TITLE: **D. CONTROL BOX ASSEMBLY**								
INDEX NO.	DESCRIPTION	MATERIAL OR MODEL NUMBER	PART NUMBER	REQUIRED NUMBER				
				MAF		MAH		
				J-0 K-0	L-0	L-0	L-1	
1	CONTROL BOX	GS	3A0602G01	1	1			
		GS	3A1824G01			1	1	
2	CAPACITOR	25µf 370 VAC	439943-02	1	1	1	1	
3	CAPACITOR - STARTING	189-227µf 330V	3A0076-12	1	1	1	1	
4	STRAP	GS	434580-08	1	1	1	1	
4a	T2 SCREW	4X8	7P31-0408	1	1	1	1	
5	STARTER	3ARR3CT24S5	4A0875-01	1	x1			
		-	4A1107-13		o1	1	1	
5a	T2 SCREW	4X8	7P31-0408	1	1	1	1	
6	RELAY	LY2F 120 VAC	406132-07	1	1	1	1	
7	TAPPING SCREW	3X8	431415-01	2	2	2	2	
8	THERMOSTAT	A30-3815-00	4A0824-01	1	1	1	1	
8a	TRUSS HEAD SCREW	4X8	7C31-0408	1	1	1	1	
9	TOGGLE SWITCH	7563K6	443119-01	1	1	1	1	
10	TOGGLE SWITCH	8966K211	4A0985-01	1	1	1	1	
11	TRANSFORMER	26D285H	3A0172-01	1	1	1	1	
11a	T2 SCREW	4X8	7P31-0408	2	2	2	2	
12	CONTROLLER BOARD	HOS001A	2A1410-01	1	1	1	1	
13	BOARD SUPPORT	CBLS37-M	4A0336-03	4	4	4	4	
14	MAGNETIC CONTACTOR	VC20	428393-01	1	1	1	1	
15	BRACKET	BW 9154	428393F01	1	1	1	1	
15a	T2 SCREW	4X8	7P31-0408	2	2	2	2	
16	BUSHING	OCB-500	428394-02	2	2	2	2	
17	BUSHING	OCB-625	428394-03	2	2	-		
18	BUSHING	OCB-875	428394-04	1	1	3	3	
19	CONTROL LABEL	PES FILM	4A1758-01	1	1	1	1	
20	WIRE SADDLE	VWS4238-C	4A0338-02	2	2	2	2	
21	CAPACITOR	5µf 250 VAC	443192-02	1	1	1	1	
21a	T2 SCREW	4X8	7P31-0408	1	1	1	1	

MODEL: KML-450MWF, KML-450MWH TITLE: D. CONTROL BOX ASSEMBLY								
INDEX NO.	DESCRIPTION	MATERIAL OR MODEL NUMBER	PART NUMBER	REQUIRED NUMBER				
				MWF		MWH		
				J-0 K-0	L-0	L-0		
1	CONTROL BOX	GS	3A0602G01	1	1			
		GS	3A1824G01			1		
2	CAPACITOR	25µf 370 VAC	439943-02	1	1	1		
3	CAPACITOR - STARTING	189-227µf 330V	3A0076-12	1	1	1		
4	STRAP	GS	434580-08	1	1	1		
4a	T2 SCREW	4X8	7P31-0408	1	1	1		
5	STARTER	3ARR3CT24S5	4A0875-01	1	x1			
		-	4A1107-13		o1	1		
5a	T2 SCREW	4X8	7P31-0408	1	1	1		
6	RELAY	LY2F 120 VAC	406132-07	1	1	1		
7	TAPPING SCREW	3X8	431415-01	2	2	2		
8	THERMOSTAT	A30-3815-00	4A0824-01	1	1	1		
8a	TRUSS HEAD SCREW	4X8	7C31-0408	2	2	2		
9	TOGGLE SWITCH	7563K6	443119-01	1	1	1		
10	TOGGLE SWITCH	8966K211	4A0985-01	1	1	1		
11	TRANSFORMER	26D285H	3A0172-01	1	1	1		
11a	T2 SCREW	4X8	7P31-0408	2	2	2		
12	CONTROLLER BOARD	HOS001A	2A1410-01	1	1	1		
13	BOARD SUPPORT	CBLS37-M	4A0336-03	4	4	4		
14	MAGNETIC CONTACTOR	VC20	428393-01	1	1	1		
15	BRACKET	BW 9154	428393F01	1	1	1		
15a	T2 SCREW	4X8	7P31-0408	2	2	2		
16	BUSHING	OCB-500	428394-02	2	2	2		
17	BUSHING	OCB-625	428394-03	2	2	-		
18	BUSHING	OCB-875	428394-04	1		3		
19	CONTROL LABEL	PES FILM	4A1758-01	1	1	1		
20	WIRE SADDLE	VWS4238-C	4A0338-02	2	2	2		

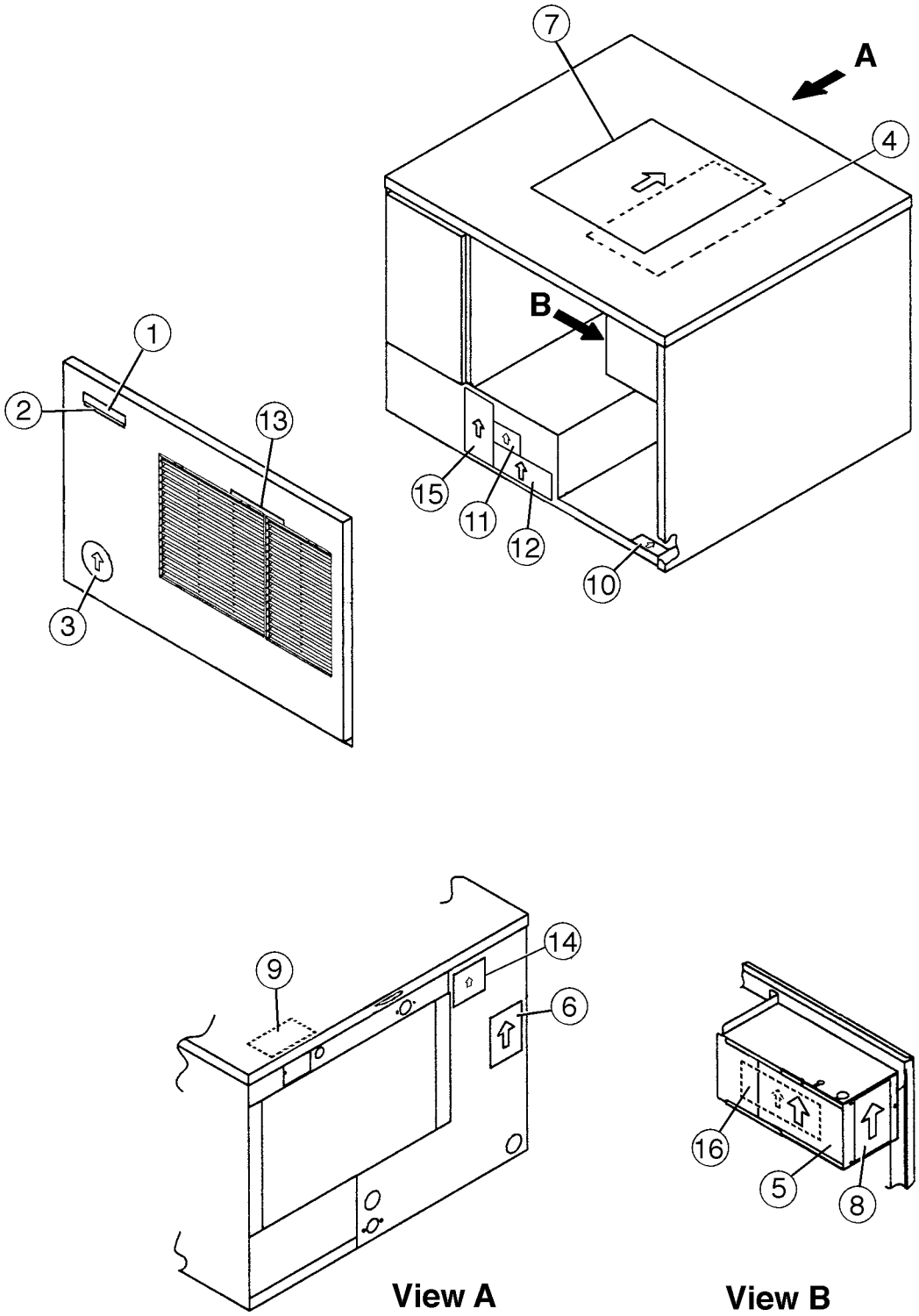
7
A
4
B
1
2
13
15
11
12
10
3
9
14
6
16
5
8
View A
View B

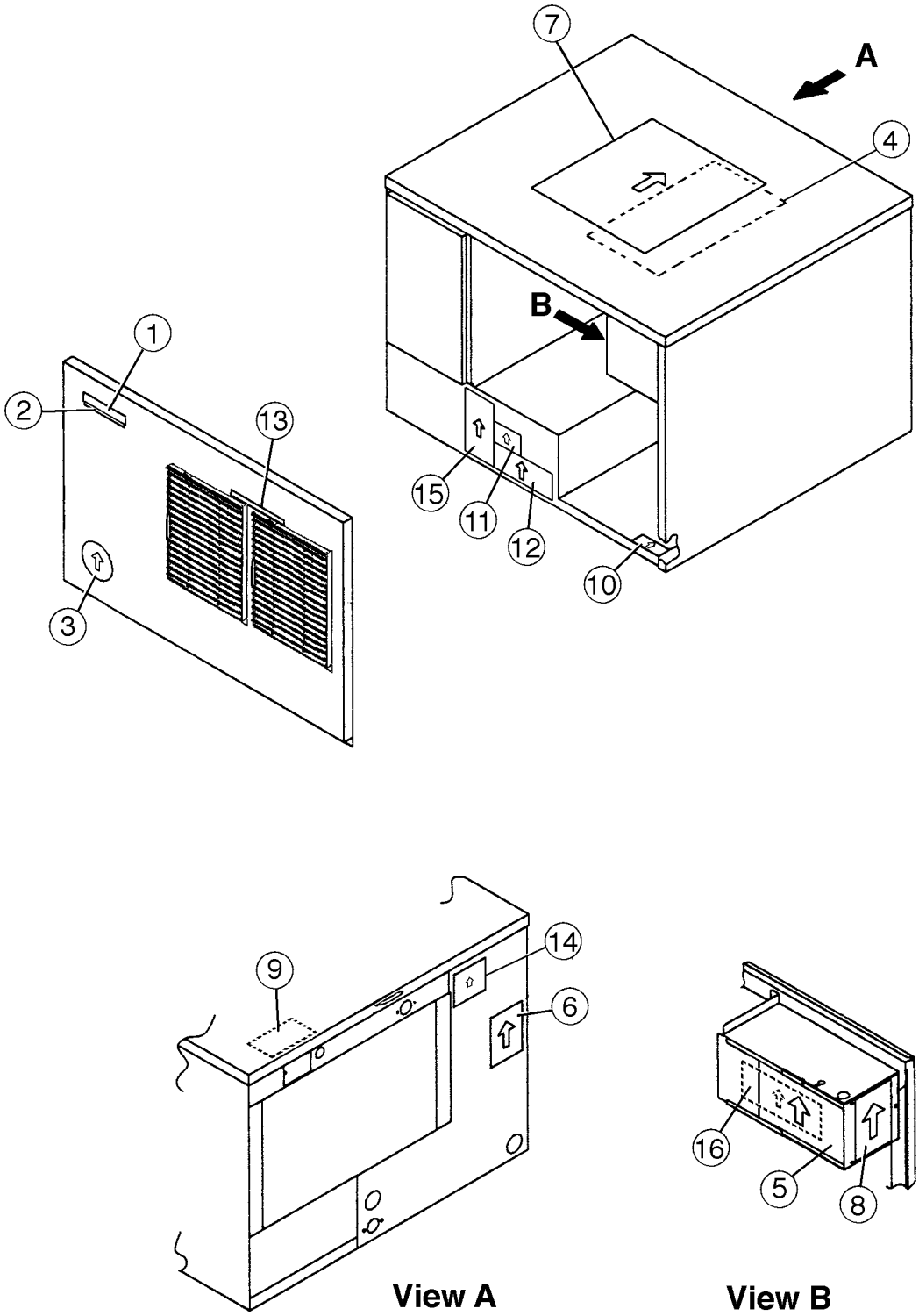
7
A
4
B
1
2
13
15
11
12
10
3
9
14
6
16
5
8
View A
View B

MODEL: KML-450MAF, KML-450MAH TITLE: E. LABEL LOCATION								
INDEX NO.	DESCRIPTION	MATERIAL OR MODEL NUMBER	PART NUMBER	REQUIRED NUMBER				
				MAF		MAH		
				J-0 K-0	L-0	L-0	L-1	
1	EMBLEM	PETP FILM	4A0560-01	1	1	1	1	
2	MODEL NUMBER LABEL	PETP FILM	4A1233-47	1	1			
		PETP FILM	4A2356-56			1	1	
3	LABEL - PENGUIN - HA (R)	PETP FILM	4A0526-01	1	1			
4	MAINTENANCE LABEL	PVC FILM	3A0878-01	1	1			
		PVC FILM	3A1873-01			1	1	
5	WIRING LABEL	PVC FILM	3A1324-01	1	1	1	1	
6	NAMEPLATE	PES FILM	4A1900-01	1	1			
		PES FILM	4A2432-01			1	1	
7	INSTRUCTION SHEET	PAPER	2A1253-01	1	1			
		PAPER	2A2156-01			1	1	
8	MANUAL LABEL	PVC FILM	4A1090-01	1	1	1	1	
9	TAG - WARNING: ELECTRICAL CONNECTION	PAPER	435005-01	1	1	1	1	
10	LABEL – R404A	PES FILM	4A0960-01	1	1	1	1	
11	CAUTION LABEL (F)	PVC FILM	439146-01	1	1	1	1	
12	CAUTION LABEL (K)	PVC FILM	439150-01	1	1	1	1	
13	LABEL - AIR FILTER	PETP FILM	426177-01	1	1	1	1	
14	INSTRUCTION LABEL	PVC FILM	444575-01	1	1	1	1	
15	RATING LABEL	PES FILM	4A1901-01	1	1			
		PES FILM	4A2433-01			1	1	
16	LABEL- CONTROL BOARD	PVC FILM	3A1272-01	1	1	1	1	

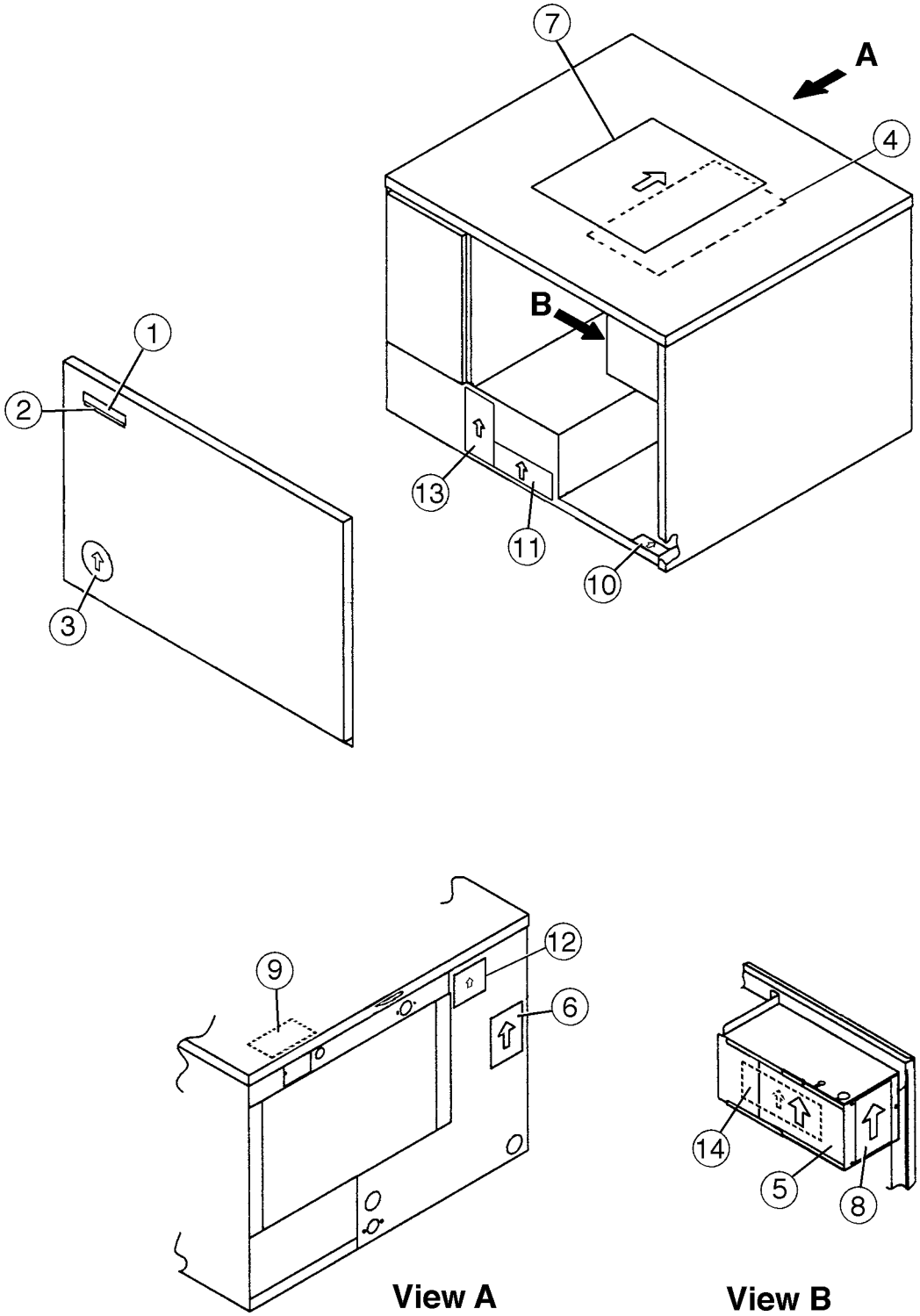
7
A
4
B
1
2
13
11
10
3
9
12
6
14
5
8
View A
View B

MODEL: **KML-450MWF, KML-450MWH** TITLE: **E. LABEL LOCATION**								
INDEX NO.	DESCRIPTION	MATERIAL OR MODEL NUMBER	PART NUMBER	REQUIRED NUMBER				
				MWF		MWH		
				J-0 K-0	L-0	L-0		
1	EMBLEM	PETP FILM	4A0560-01	1	1	1		
2	MODEL NUMBER LABEL	PETP FILM	4A1233-48	1	1			
		PETP FILM	4A2356-57			1		
3	LABEL - PENGUIN - HA (R)	PETP FILM	4A0526-01	1	1	1		
4	MAINTENANCE LABEL	PVC FILM	3A0878-01	1	1			
		PVC FILM	3A1873-01			1		
5	WIRING LABEL	PVC FILM	3A1324-01	1	1	1		
6	NAMEPLATE	PES FILM	4A1902-01	1	1			
		PES FILM	4A2434-01			1		
7	INSTRUCTION SHEET	PAPER	2A1253-01	1	1			
		PAPER	2A2156-01			1		
8	MANUAL LABEL	PVC FILM	4A1090-01	1	1	1		
9	TAG - WARNING: ELECTRICAL CONNECTION	PAPER	435005-01	1	1	1		
10	LABEL – R404A	PES FILM	4A0960-01	1	1	1		
11	CAUTION LABEL (K)	PVC FILM	439150-01	1	1	1		
12	INSTRUCTION LABEL	PVC FILM	444575-01	1	1	1		
13	RATING LABEL	PES FILM	4A1903-01	1	1			
		PES FILM	4A2435-01			1		
14	LABEL-CONTROL BOARD	PES FILM	3A1272-01	1	1	1		

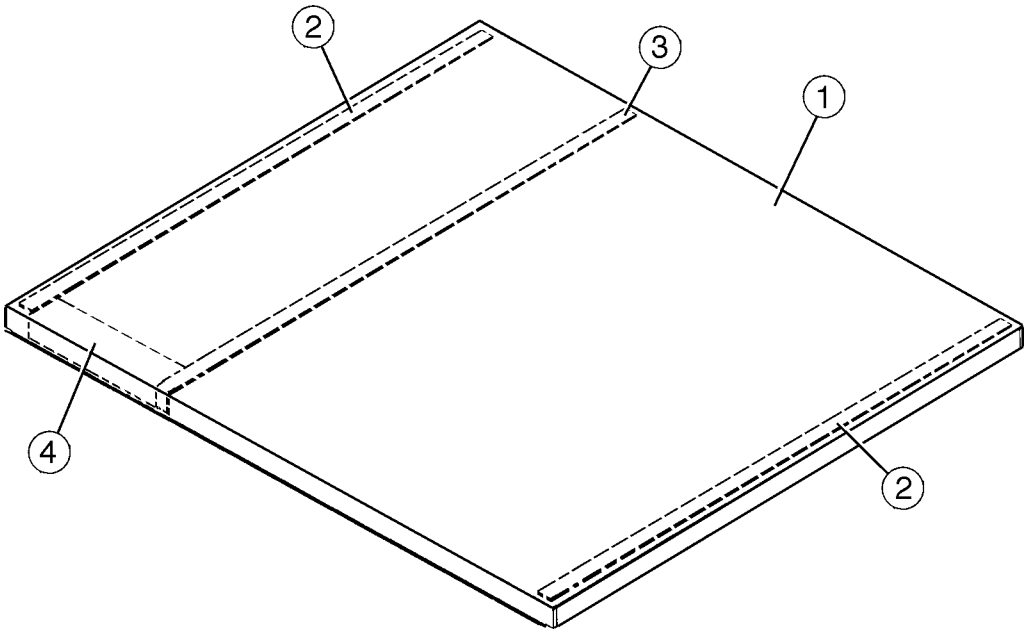
2
3
1
4
2

MODEL: KML-450MAF, MWF, MAH, MWH TITLE: F. TOP PANEL ASSEMBLY								
INDEX NO.	DESCRIPTION	MATERIAL OR MODEL NUMBER	PART NUMBER	REQUIRED NUMBER				
				M_F		M_H		
				J-0 K-0	L-0	L-0	L-1	
1	TOP PANEL	SS	213543-01	1	1			
		SS	2A2110-01			1	1	
2	GASKET	PVC	427014-04	2	2	2	2	
3	GASKET (A)	NORMOUNT V710	324859-03	1	1	1	1	
4	INSULATION	PE FOAM	438012-01	1	1	1	1	

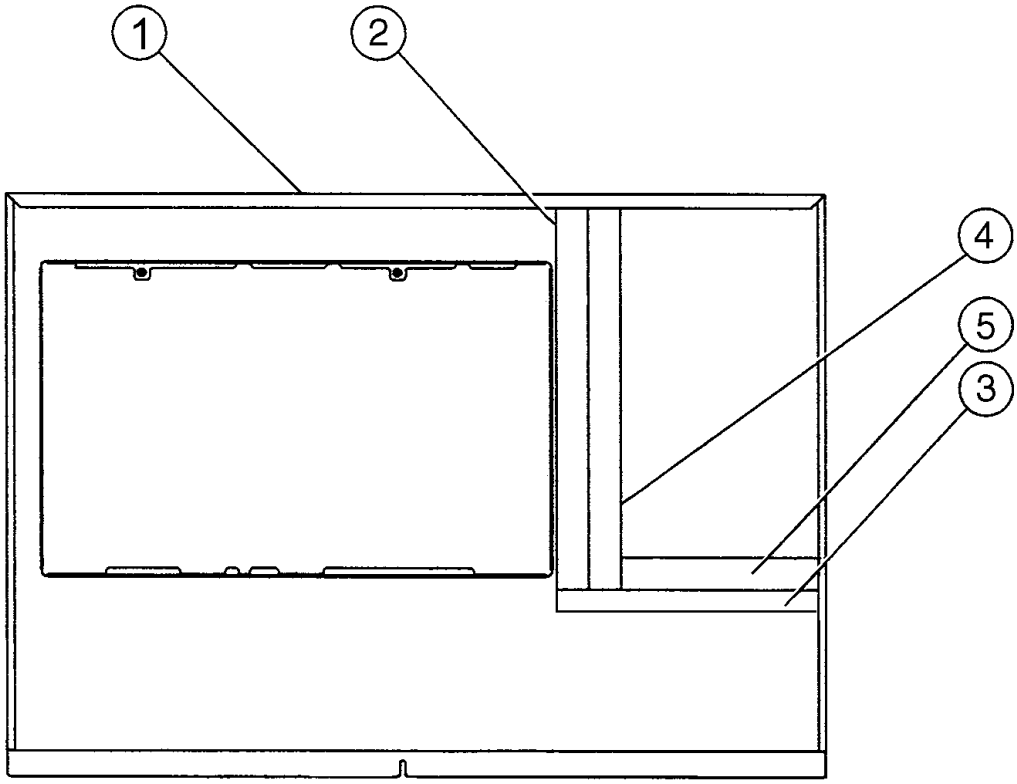
1
2
4
5
3

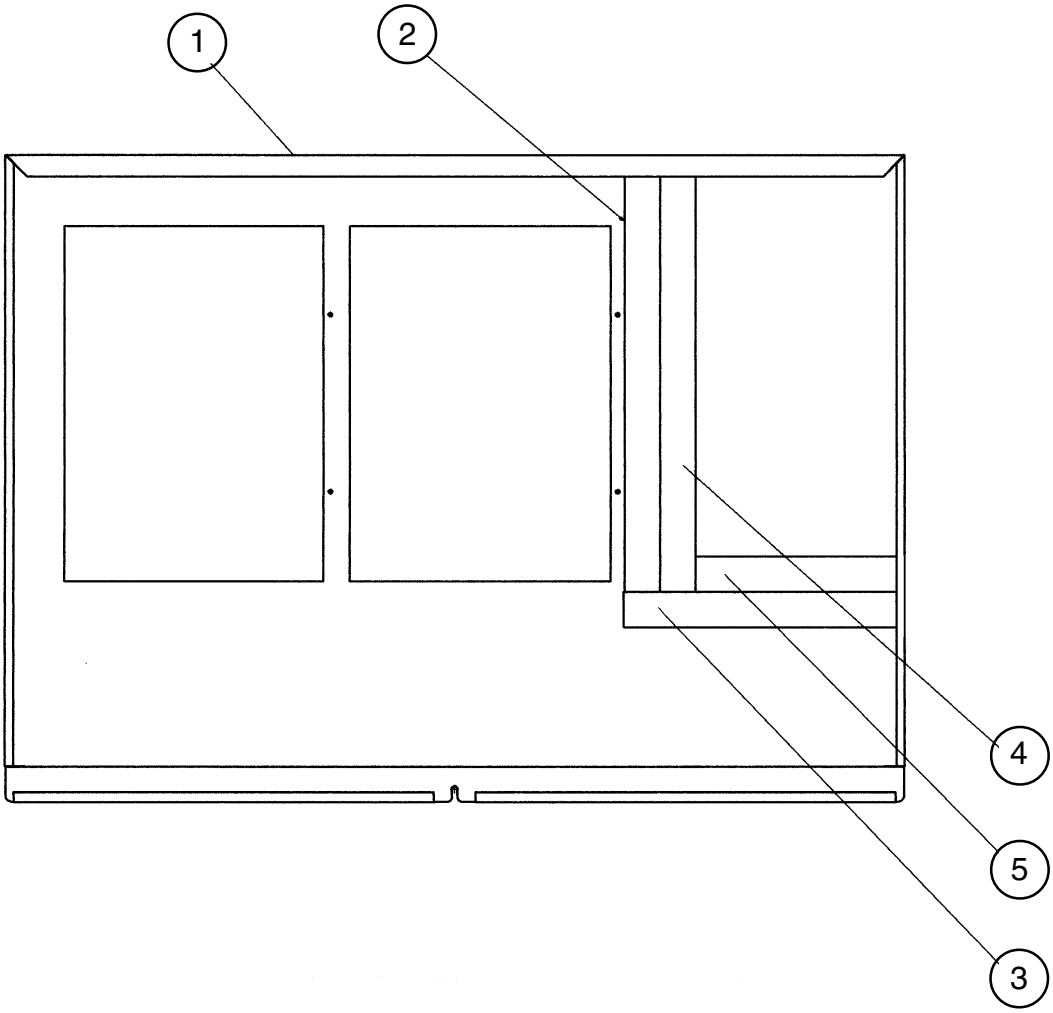
1
2
4
5
3

MODEL: KML-450MAF, KML-450MAH TITLE: G. FRONT PANEL ASSEMBLY								
INDEX NO.	DESCRIPTION	MATERIAL OR MODEL NUMBER	PART NUMBER	REQUIRED NUMBER				
				MAF		MAH		
				J-0 K-0	L-0	L-0	L-1	
1	FRONT PANEL (A)	SS	2A1455-01	1	1			
		SS	2A2107-01			1	1	
2	FOAM SEAL	L=370	4A0661L01	1	1	1	1	
3	FOAM SEAL	L=250	4A0661L01	1	1	1	1	
4	FOAM SEAL	L=370	4A1163L01	1	1	1	1	
5	FOAM SEAL	L=190	4A1163L01	1	1	1	1	

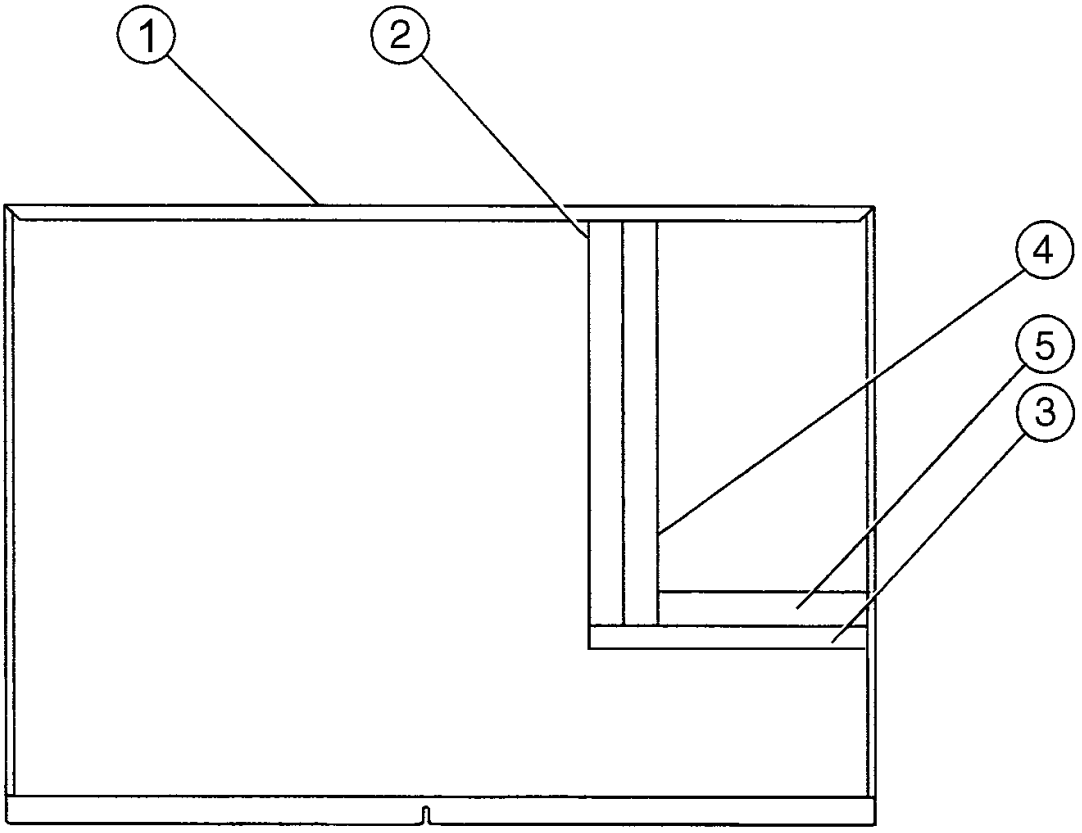
1
2
4
5
3

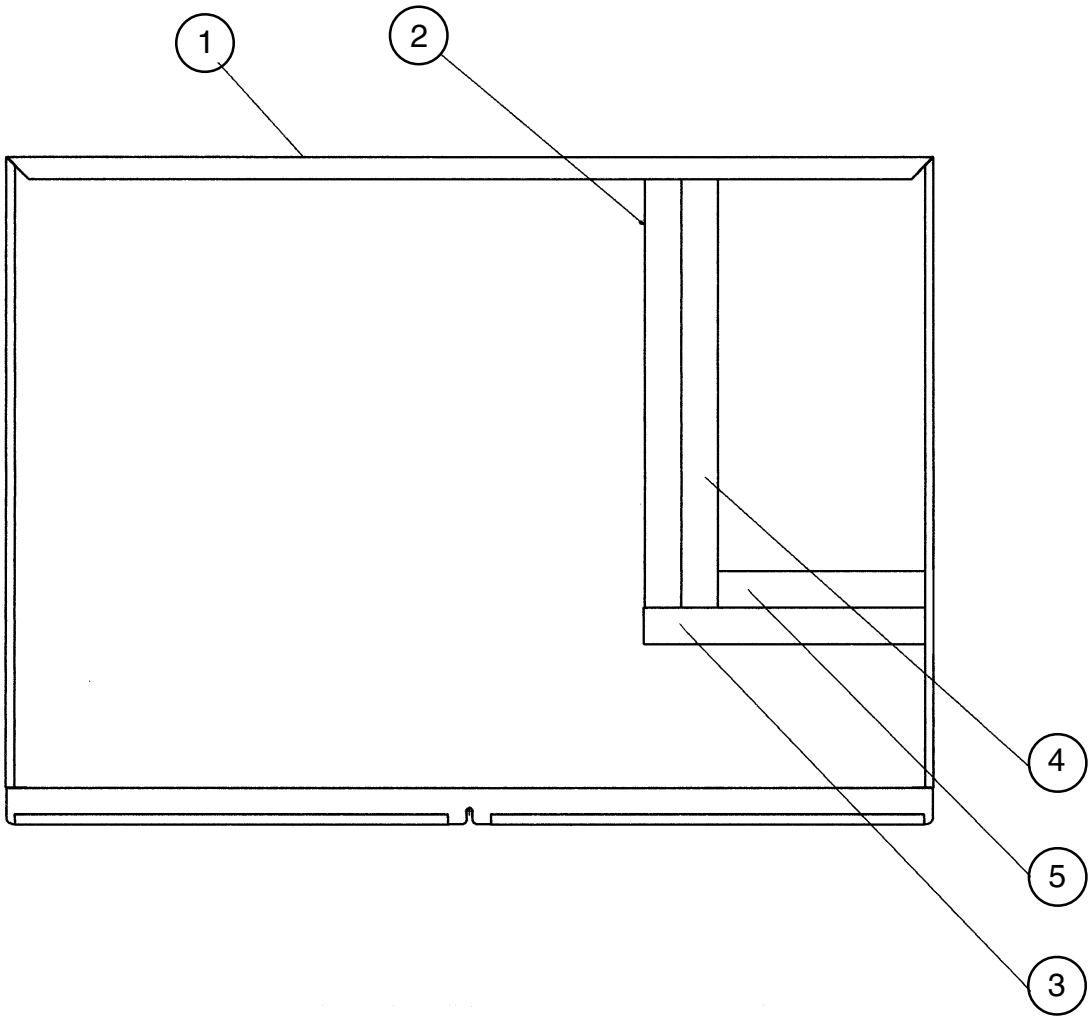
1
2
4
5
3

MODEL: **KML-450MWF, KML-450MWH** TITLE: **G. FRONT PANEL ASSEMBLY**								
INDEX NO.	DESCRIPTION	MATERIAL OR MODEL NUMBER	PART NUMBER	REQUIRED NUMBER				
				MWF		MWH		
				J-0 K-0	L-0	L-0		
1	FRONT PANEL (A)	SS	2A1454-01	1	1			
		SS	2A2107-02			1		
2	FOAM SEAL	L=370	4A0661L01	1	1	1		
3	FOAM SEAL	L=250	4A0661L01	1	1	1		
4	FOAM SEAL	L=370	4A1163L01	1	1	1		
5	FOAM SEAL	L=190	4A1163L01	1	1	1		

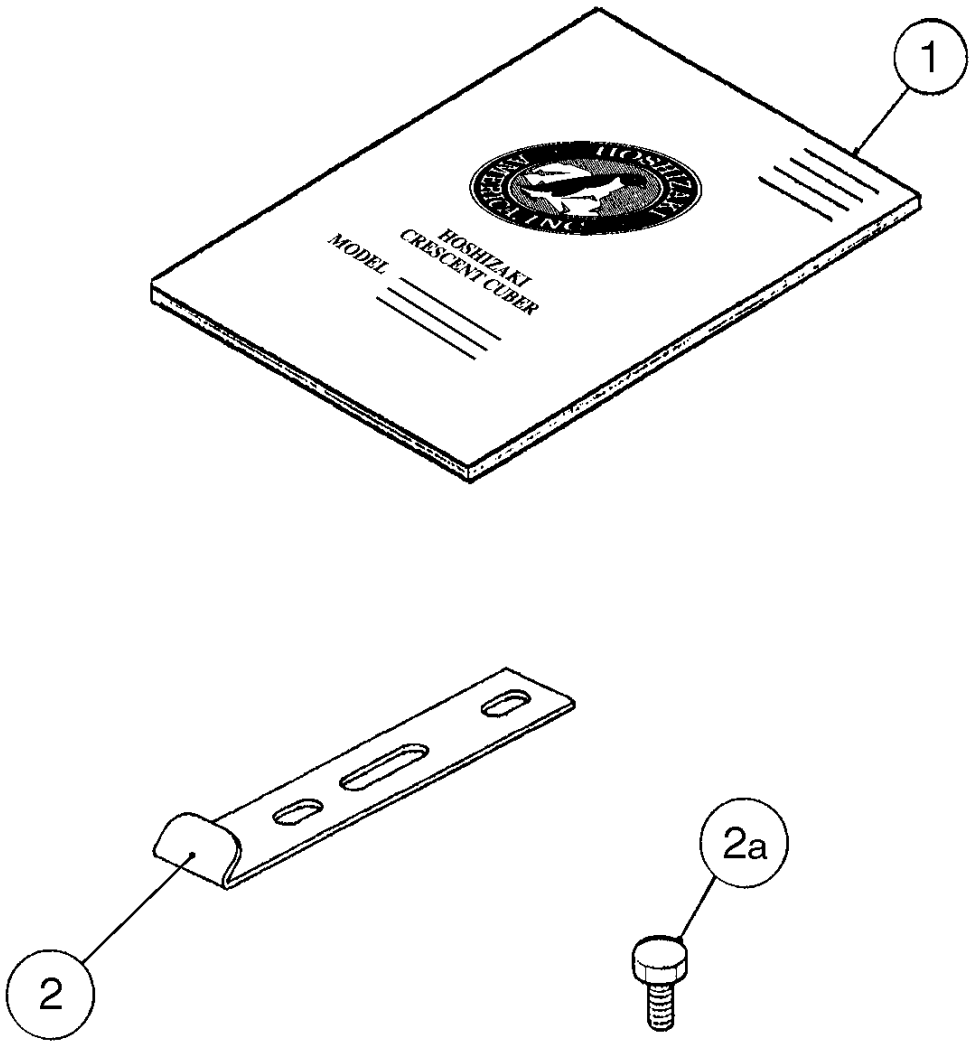
1
HOSHIZAKI
CRESCENT CUBER
MODEL
2
2a

MODEL: KML-450MAF, MWF, MAH, MWH TITLE: H. ACCESSORIES								
INDEX NO.	DESCRIPTION	MATERIAL OR MODEL NUMBER	PART NUMBER	REQUIRED NUMBER				
				M_F		M_H		
				J-0 K-0	L-0	L-0	L-1	
1	INSTRUCTION MANUAL	PAPER	91A1BC10A	1	1			
		PAPER	91A1BE10A			1	1	
2	UNIVERSAL BRACE	GS	4A0363-01	2	2	2	2	
2a	HEX HEAD BOLT	SS, 5X12	7B02-0512	2	2	2	2	