NO.	71159
ISSUED:	MARCH. 31, 2000
REVISED:	JULY 31, 2002

HOSHIZAKI AMERICA, INC.

HOSHIZAKI
MODULAR CRESCENT CUBER

MODEL
KML-350MAF
KML-350MWF

(FINAL) PARTS LIST

K-0 JAN., 2000

MATERIAL ABBREVIATIONS

ALUMINUM

AL	=	Aluminum

COPPER

CU	=	Copper

PLASTIC

ABS	=	Acrylonitrile -butadiene - styrene
AC	=	Polyacetal
EVA	=	Ethylene vinyl acetate
PA	=	Polyamide = Nylon
PC	=	Polycarbonate
PE	=	Polyethylene
PES	=	Polyester
PETP	=	Polyethylene terephthalate = Tetlon
PP	=	Polypropylene
PS	=	Polystyrene
PIFE	=	Polytetrafluoroethylene = Teflon
PUR	=	Polyurethane
PVC	=	Polyvinyl chloride

RUBBER

VN	=	Vinyl Nitrile
EPDM	=	EP rubber
NBR	=	Nitrile butadiene rubber
NR	=	Natural rubber
NP	=	Neoprene
SI.R	=	Silicone rubber
SY.R	=	Synthetic rubber
EPH	=	Epichlorohydrin

STEEL

GS	=	Galvanized steel
SS	=	Stainless steel
PS	=	Plated steel
PAS	=	Primed steel

AUXILIARY CODE

Ex.1 K-0

- 0: Parts are the same as in the preceding year.
- K: "K" is the tenth in alphabetical order with "I" skipped. So, "K" indicates "2000".

Ex.2 L-0

- L: "L" is the next in alphabetical order. So, "L" indicates "2001".
- 0: Each time a part is changed non-interchangeably, in a year, this number advances.

Ex.3 L-1

- 1: Each time a part is changed non-interchangeably, in a year, this number advances.

(Note) - = Part deleted.

x = Part deleted and replaced by "o" part.

o = New part for "x" in the same auxiliary code.

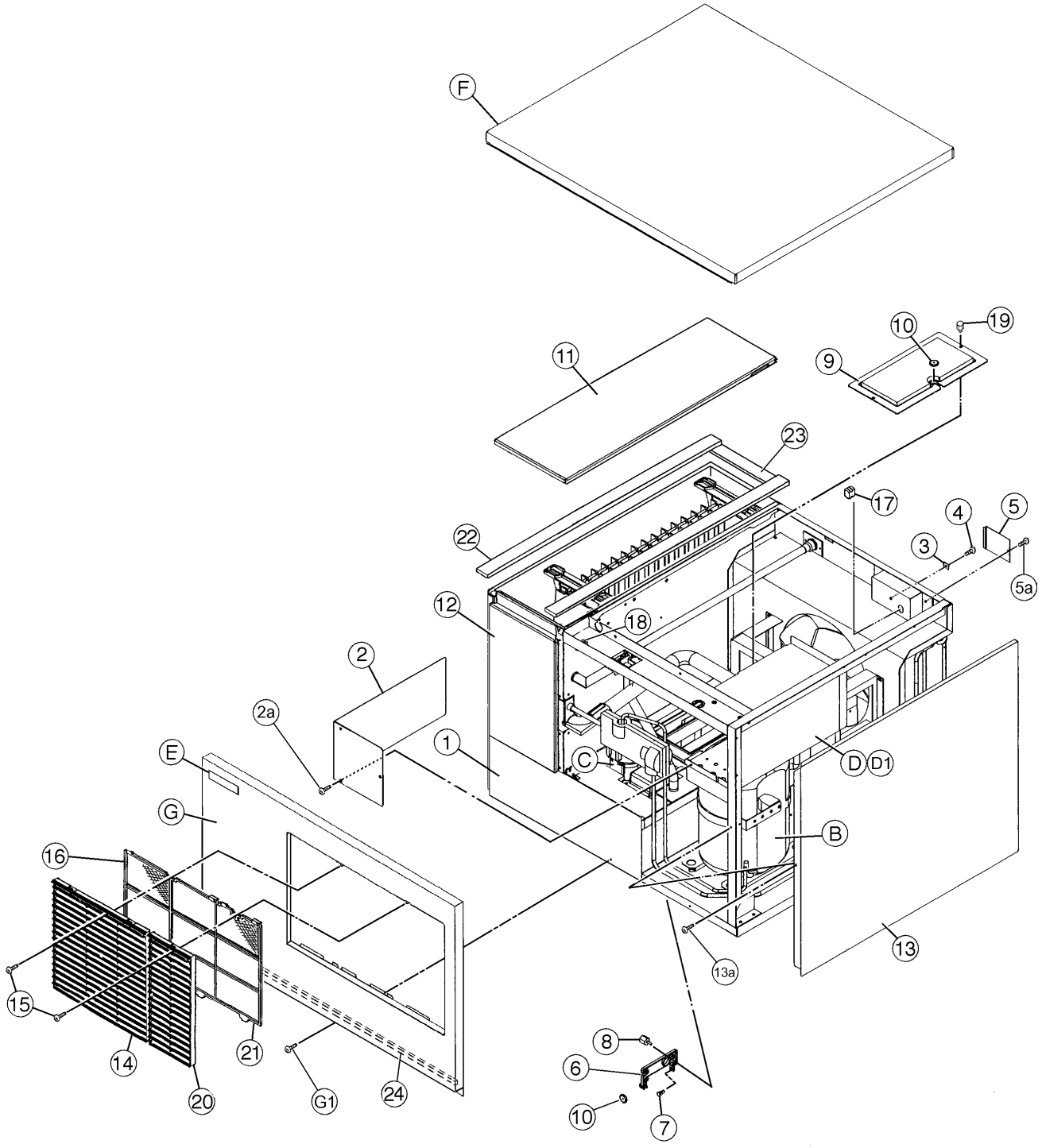
F
11
10
19
9
23
17
4
5
3
5a
22
12
18
2
2a
1
E
C
D
D1
G
B
16
13
13a
15
14
21
20
G1
24
8
6
10
7

MODEL: **KML-350MAF** TITLE: **A. ICE CUBER ASSEMBLY**								
INDEX NO.	DESCRIPTION	MATERIAL OR MODEL NUMBER	PART NUMBER	REQUIRED NUMBER				
				K-0				
B	REFRIGERATION CIRCUIT	-	1A0445A01	1				
C	WATER CIRCUIT	-	1A0438A01	1				
D	CONT. BOX ASSEMBLY	-	2A1519A03	1				
D1	T2 SCREW	4X8	7P31-0408	3				
E	LABEL LOCATION	-	3A1320A01	1				
F	TOP PANEL ASSEMBLY	-	3A0674A01	1				
G	FRONT PANEL	-	3A1273A01	1				
G1	TRUSS HEAD SCREW	4X8, SS	7C32-0408	2				
1	EVAP. CASE	HS-1014	2A1449G01	1				
2	CONT. BOX COVER	GS	3A0594-01	1				
2a	T2 SCREW	4X8	7P31-0408	3				
3	SQUARE WASHER	BRASS	433537-02	1				
4	SCREW - GROUNDING	BRASS	433304-02	1				
5	JUNCTION BOX COVER	GS	433410-01	1				
5a	T2 SCREW	4X8	7P31-0408	1				
6	THERMOSTAT EXTENSION BRACKET	SS	4A1722-01	1				
7	SPACER	PE	443545-01	1				
8	THUMBSCREW	SS, ABS	415949G03	2				
9	BIN CONT. COVER	GS	3A0664G01	1				
10	CAPILLARY RING	EP RUBBER	425307-01	2				
11	TOP INSULATION	PP	215730G01	1				
12	FRONT INSULATION	PP	2A0664G01	1				
13	SIDE PANEL (R)	SS	2A1456G01	1				
13a	T2 SCREW	4X8, SS	7P32-0408	1				
14	LOUVER (B)	ABS	103121-05	1				
15	TAPPING SCREW (BLACK)	STEEL, 4X8	433954-01	2				
16	AIR FILTER (B)	ABS	208283G03	1				
17	BUSHING	SR-34-2	420472-03	1				
18	WIRE SADDLE	VWS4238-C	4A0338-02	2				
19	THUMBSCREW	SS, ABS	415949G04	2				
20	LOUVER (C)	ABS	103122-03	1				

MODEL: **KML-350MAF** TITLE: **A. ICE CUBER ASSEMBLY**								
INDEX NO.	DESCRIPTION	MATERIAL OR MODEL NUMBER	PART NUMBER	REQUIRED NUMBER				
				K-0				
21	AIR FILTER (C)	ABS	208284G01	1				
22	GASKET	L=655	4A0808L02	2				
23	GASKET	L=190	4A0808L02	1				
24	GASKET	L=762	4A0808L02	1				

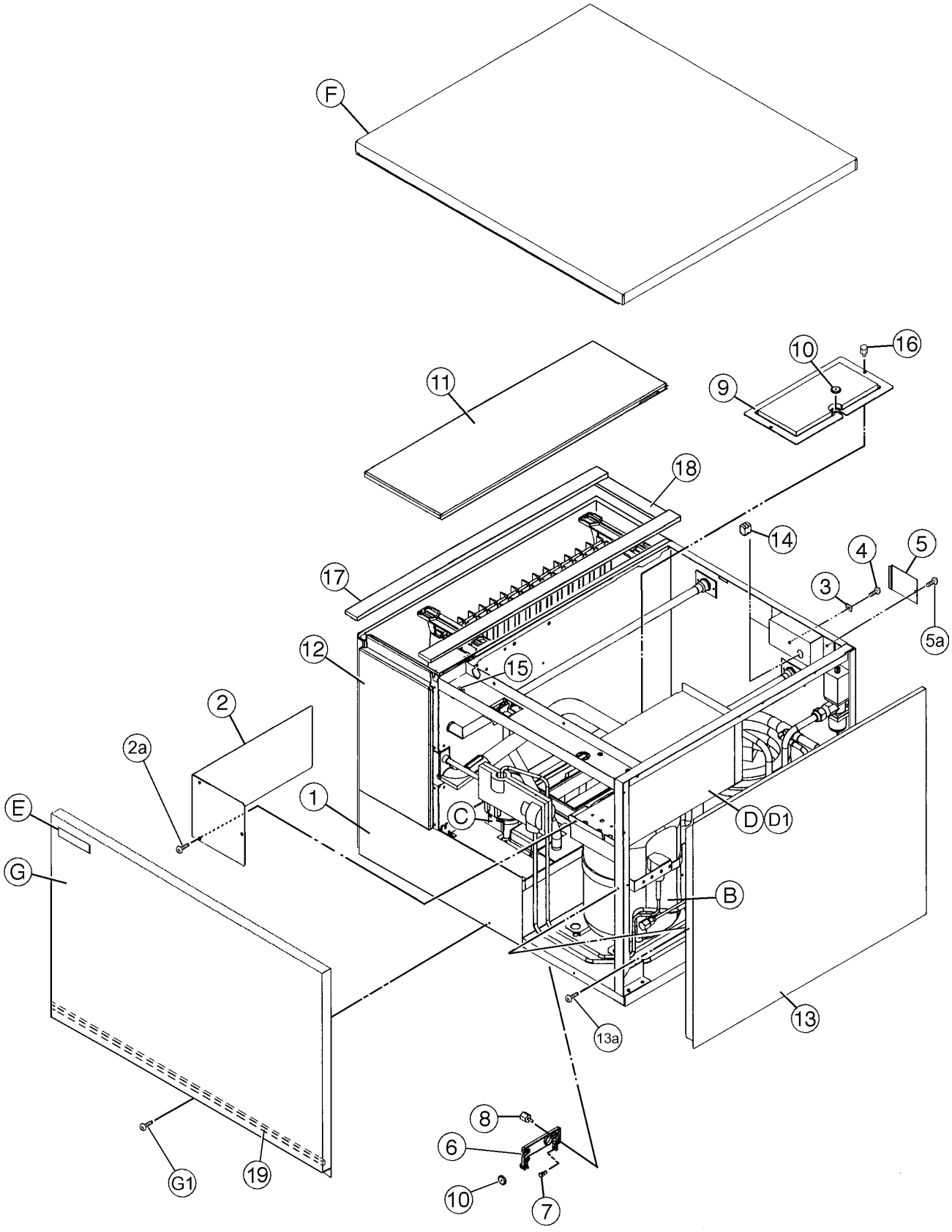
F
11
10
16
9
18
14
4
5
17
3
5a
12
15
2
2a
1
E
C
D
D1
G
B
13a
13
8
6
10
7
G1
19

MODEL: **KML-350MWF** TITLE: **A. ICE CUBER ASSEMBLY**								
INDEX NO.	DESCRIPTION	MATERIAL OR MODEL NUMBER	PART NUMBER	REQUIRED NUMBER				
				K-0				
B	REFRIGERATION CIRCUIT	-	1A0444A01	1				
C	WATER CIRCUIT	HS-1208	1A0938A01	1				
D	CONT. BOX ASSEMBLY	-	2A1519A04	1				
D1	T2 SCREW	4X8	7P31-0408	3				
E	LABEL LOCATION	-	3A1321A01	1				
F	TOP PANEL ASSY	-	3A0674A01	1				
G	FRONT PANEL	-	3A1273A02	1				
G1	TRUSS HEAD SCREW	4X8, SS	7C32-0408	2				
1	EVAP. CASE	HS-1014	2A1449G01	1				
2	CONT. BOX COVER	GS	3A0594-01	1				
2a	T2 SCREW	4X8	7C31-0408	3				
3	SQUARE WASHER	BRASS	433537-02	1				
4	SCREW - GROUNDING	BRASS	433304-02	1				
5	JUNCTION BOX COVER	GS	433410-01	1				
5a	T2 SCREW	4X8	7C31-0408	1				
6	THERMOSTAT EXTENSION BRACKET	SS	4A1722-01	1				
7	SPACER	PE	443545-01	1				
8	THUMBSCREW	SS, ABS	415949G03	2				
9	BIN CONT COVER	GS	3A0664G01	1				
10	CAPILLARY RING	EP RUBBER	425307-01	2				
11	TOP INSULATION	PP	215730G01	1				
12	FRONT INSULATION	PP	2A0664G01	1				
13	SIDE PANEL (R)	SS	2A1456G01	1				
13a	T2 SCREW	4X8, SS	7P32-0408	1				
14	BUSHING	SR-30-1	420472-03	1				
15	WIRE SADDLE	VWS4238-C	4A0338-02	2				
16	THUMBSCREW	SS, ABS	415949G04	2				
17	GASKET	L=655	4A0808L02	2				
18	GASKET	L=190	4A0808L02	1				
19	GASKET	L=762	4A0808L02	1				

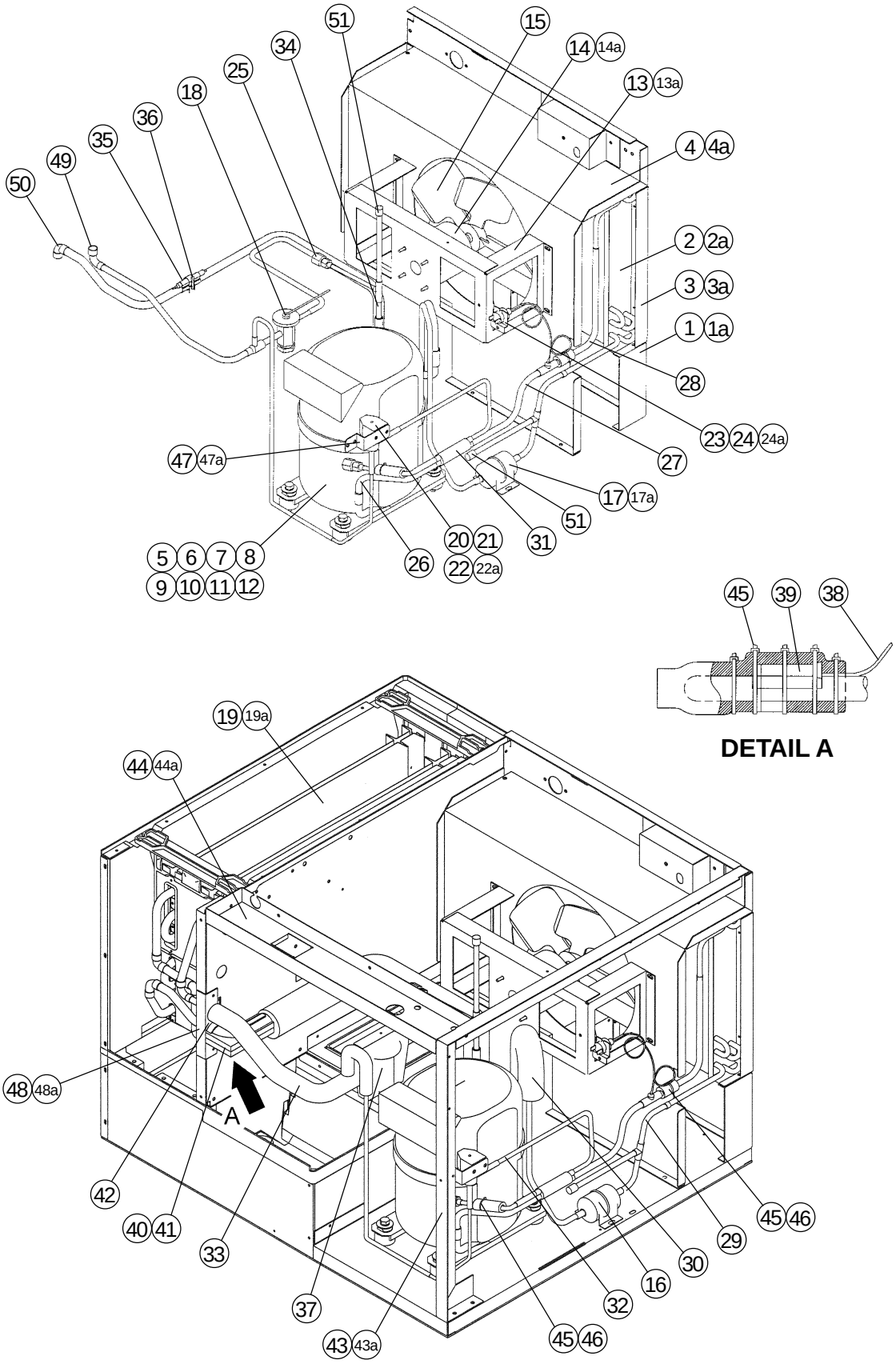
51
15
14 14a
13 13a
34
25
18
36
35
49
50
4 4a
2 2a
3 3a
1 1a
28
23 24 24a
27
47 47a
17 17a
51
31
20 21
22 22a
26
5 6 7 8
9 10 11 12
45 39 38
DETAIL A
19 19a
44 44a
48 48a
A
42
40 41
33
37
43 43a
45 46
32
16
30
29
45 46

MODEL: **KML-350MAF** TITLE: **B. REFRIGERATION CIRCUIT**								
INDEX NO.	DESCRIPTION	MATERIAL OR MODEL NUMBER	PART NUMBER	REQUIRED NUMBER				
				K-0				
1	COND. SUPPORT	GS	3A0589-01	1				
1a	T2 SCREW	4X8	7P31-0408	5				
2	CONDENSER	-	2A0779-01	1				
2a	T2 SCREW	4X8	7P31-0408	3				
3	BARRIER	GS	4A0932-01	1				
3a	T2 SCREW	4X8	7P31-0408	2				
4	SHROUD	GS	3A0597G01	1				
4a	T2 SCREW	4X8	7P31-0408	5				
5	COMPRESSOR	RS43C2E-CAA-219	4A2300-01	1				
6	TERMINAL COVER	COMP. ACCESSORY	4A2300F01	1				
7	SPRING CLIP	COMP. ACCESSORY	4A2300F02	1				
8	MOTOR PROTECTOR	COMP. ACCESSORY	4A1805-01	1				
9	PROTECTOR HOLDER	COMP. ACCESSORY	437339-01	1				
10	BOLT	8X45	437889-01	4				
11	SPACER	027-0072-02	434404-01	1				
12	GROMMET	527-0039-04	434403-01	4				
13	FAN MOTOR BRACKET	GS	2A0181-01	1				
13a	HEX HEAD BOLT W/WASHER (LF)	5X12	7B0130512	4				
14	FAN MOTOR	U90B1 7190-1031	440911-01	1				
14a	SELF LOCKING NUT	NO. 8-32	7N21I0832	4				
15	FAN BLADE	AD10CW32	444898-01	1				
16	DRIER	CW-0325-S	4A1413-01	1				
17	DRIER BRACKET	GS	4A0807-01	1				
17a	T2 SCREW	4X8	7P31-0408	2				
18	EXP. VALVE	AN ½ SW 70	4A1838-02	1				
19	EVAPORATOR ASSEMBLY	-	2A0717G01	1				
19a	T2 SCREW	4X16	7P31-0416	4				
20	VALVE BODY	70	440352-01	1				
21	COIL-VALVE	ABS-25-1-HD-2	440353-01	1				

MODEL: **KML-350MAF** TITLE: **B. REFRIGERATION CIRCUIT**								
INDEX NO.	DESCRIPTION	MATERIAL OR MODEL NUMBER	PART NUMBER	REQUIRED NUMBER				
				K-0				
22	BOLT	-	440353F01	1				
22a	TRUSS HEAD SCREW	4X8	7C31-0408	2				
23	PRESSURE SWITCH	ACB-1UB09	433441-07	1				
24	PRESSURE SWITCH BRACKET	GS	434938-01	1				
24a	T2 SCREW	4X8	7P31-0408	1				
25	ACCESS VALVE	TCJ-2F20 NH DU-1	457729-01	2				
26	COPPER TUBE (A) - HIGH SIDE	COPPER	4A1846-01	1				
27	COPPER TUBE (B) - HIGH SIDE	COPPER	3A1317-01	1				
28	COPPER TUBE (C) - HIGH SIDE	COPPER	3A1316G01	1				
29	COPPER TUBE (D) - HIGH SIDE	COPPER	3A1311G01	1				
30	HEAT EXCHANGER	COPPER	2A1498G01	1				
31	STRAINER	-	4A0397-01	1				
32	COPPER TUBE (A) - HOT GAS	COPPER	4A1878-01	1				
33	COPPER TUBE (B) - HOT GAS	COPPER	2A1502G01	1				
34	COPPER TUBE (A) – ACCESS VALVE	COPPER	3A1323G01	1				
35	HOLDER / EXP. VALVE – 1/2	SS	3A0112-01	1				
36	CLAMP	SS	443461-02	1				
37	EXPANSION VALVE COVER	PE FOAM	4A1168-01	1				
38	THERMISTOR	-	429006-03	1				
39	HOLDER - THERMISTOR	COPPER	427430-01	1				
40	INSULATION – THERMISTOR (A)	PE FOAM	439368-01	1				
41	INSULATION – THERMISTOR (B)	PE FOAM	439368-02	1				
42	INSULATED RUBBER TUBE	EPDM	4A1008G01	1				
43	FRAME (A)	GS	2A0645-01	1				
43a	T2 SCREW	4X8	7P31-0408	4				
44	FRAME (B)	GS	3A0595-01	1				
44a	T2 SCREW	4X8	7P31-0408	4				
45	CABLE TIE	CV-200	7920-0010	14				
46	INSULATION TUBE	L=30	7762-1020	2				
47	LINE VALVE BRACKET	GS	4A1406-01	1				

MODEL: **KML-350MAF** TITLE: **B. REFRIGERATION CIRCUIT**								
INDEX NO.	DESCRIPTION	MATERIAL OR MODEL NUMBER	PART NUMBER	REQUIRED NUMBER				
				K-0				
47a	T2 SCREW	4X8	7P31-0408	2				
48	INSULATION HOLDER	SS	3A1084-01	1				
48a	T2 SCREW	4X8	7P31-0408	2				
49	ELBOW	COPPER	4A1059-01	1				
50	ELBOW	COPPER	417395-03	1				
51	ENDCAP	-	4A1413F01	2				

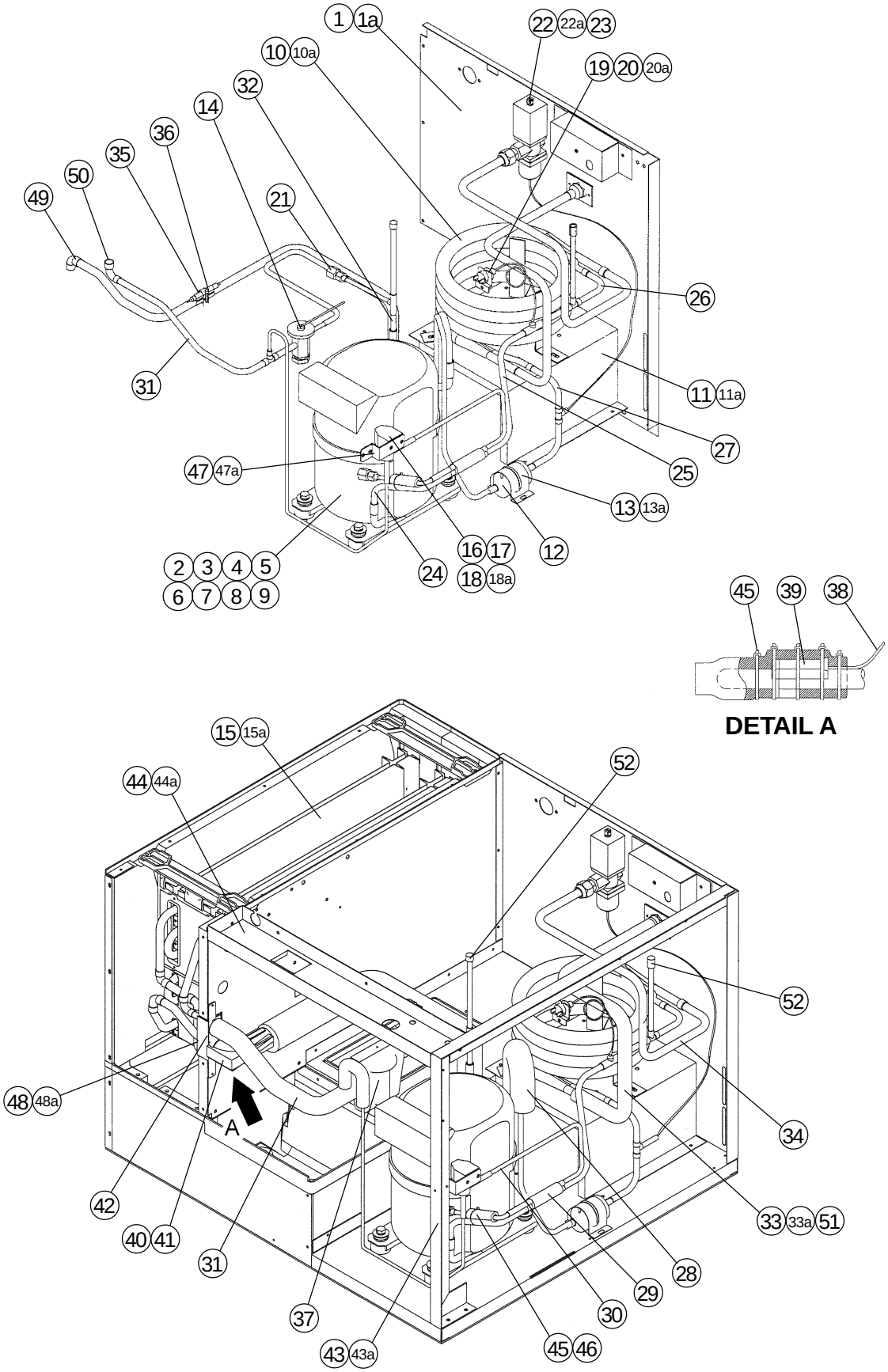
1 1a
22 22a 23
10 10a
19 20 20a
32
14
36
35
50
49
21
26
31
11 11a
27
25
47 47a
13 13a
12
16 17
18 18a
24
2 3 4 5
6 7 8 9
45 39 38
DETAIL A
15 15a
52
44 44a
52
48 48a
A
34
42
40 41
31
33 33a 51
28
29
30
37
43 43a
45 46

MODEL: **KML-350MWF** TITLE: **B. REFRIGERATION CIRCUIT**								
INDEX NO.	DESCRIPTION	MATERIAL OR MODEL NUMBER	PART NUMBER	REQUIRED NUMBER				
				K-0				
1	REAR PANEL (B)	GS	3A0630G03	1				
1a	T2 SCREW	4X8	7P31-0408	9				
2	COMPRESSOR	RS43C2E-CAA-219	4A2300-01	1				
3	TERMINAL COVER	COMP. ACCESSORY	4A2300F01	1				
4	SPRING CLIP	COMP. ACCESSORY	4A2300F02	1				
5	PROTECTOR	COMP. ACCESSORY	4A1805-01	1				
6	PROTECTOR HOLDER	COMP. ACCESSORY	437339-01	1				
7	BOLT	8X45	437889-01	4				
8	SPACER	027-0072-02	434404-01	4				
9	GROMMET	527-0039-04	434403-01	4				
10	CONDENSER	H-1 ¼-I	2A1429-01	1				
10a	HEX HEAD BOLT W/WASHER (LF)	4X12	7B0230412	3				
11	COND. SUPPORT	GS	2A1470-01	1				
11a	T2 SCREW	4X8	7P31-0408	4				
12	DRIER	CW-0325-S	4A1413-01	1				
13	DRIER BRACKET	GS	4A0807-01	1				
13a	T2 SCREW	4X8	7P31-0408	2				
14	EXP. VALVE	AN ½ SW 70	4A1838-02	1				
15	EVAPORATOR ASSEMBLY	-	2A0717G01	1				
15a	T2 SCREW	SS, 4X16	7P32-0416	4				
16	VALVE BODY	70	440352-01	1				
17	COIL VALVE	ABS-25-1-HD-2	440353-01	1				
18	BOLT	-	440353F01	1				
18a	TRUSS HEAD SCREW	4X8	7C31-0408	2				
19	PRESSURE SWITCH	ACB-1UB04	433441-05	1				
20	PRESSURE SWITCH BRACKET	GS	434938-01	1				
20a	T2 SCREW	4X8	7P31-0408	1				
21	ACCESS VALVE	TCJ-2F20NHDU-1	457729-01	2				
22	WATER REGULATOR	V46DA-3	4A0911-03	1				
22a	TRUSS HEAD SCREW	4X6	7C31-0406	2				

MODEL: **KML-350MWF** TITLE: **B. REFRIGERATION CIRCUIT**								
INDEX NO.	DESCRIPTION	MATERIAL OR MODEL NUMBER	PART NUMBER	REQUIRED NUMBER				
				K-0				
23	MALE CONNECTOR	BRASS	4A1087-01	1				
24	COPPER TUBE (A)-HIGH SIDE	COPPER	4A1846-01	1				
25	COPPER TUBE (B)-HIGH SIDE	COPPER	4A1859-01	1				
26	COPPER TUBE (C)-HIGH SIDE	COPPER	3A1282G01	1				
27	COPPER TUBE (D)-HIGH SIDE	COPPER	3A1288G01	1				
28	HEAT EXCHANGER	COPPER	2A1498G01	1				
29	STRAINER	-	4A0397-01	1				
30	COPPER TUBE (A)-HOT GAS	COPPER	4A1878-01	1				
31	COPPER TUBE (B)-HOT GAS	COPPER	2A1502G01	1				
32	COPPER TUBE (A)-ACCESS VALVE	COPPER	3A1323G01	1				
33	COPPER TUBE (A)	COPPER	3A1519G01	1				
33a	T2 SCREW	4X8	7P31-0408	2				
34	COPPER TUBE (B)	COPPER	3A1453G01	1				
35	HOLDER/EXP VALVE-1/2	SS	3A0112-01	1				
36	CLAMP	SS	443461-02	1				
37	EXPANSION VALVE COVER	PE FOAM	4A1168-01	1				
38	THERMISTOR	-	429006-03	1				
39	HOLDER-THERMISTOR	COPPER	427430-01	1				
40	INSULATION-THERMISTOR (A)	PE FOAM	439368-01	1				
41	INSULATION-THERMISTOR (B)	PE FOAM	439368-02	1				
42	INSULATED RUBBER TUBE	EPDM	4A1008G01	1				
43	FRAME (A)	GS	2A0645-01	1				
43a	T2 SCREW	4X8	7P31-0408	4				
44	FRAME (B)	GS	3A0595-01	1				
44a	T2 SCREW	4X8	7P31-0408	4				
45	CABLE TIE	CV-200	7920-010	14				
46	INSULATION TUBE	L=30	7762-1020	2				
47	LINE VALVE BRACKET	GS	4A1406-01	1				
47a	T2 SCREW	4X8	7P31-0408	2				
48	INSULATION HOLDER	SS	3A1084-01	1				

MODEL: **KML-350MWF** TITLE: **B. REFRIGERATION CIRCUIT**								
INDEX NO.	DESCRIPTION	MATERIAL OR MODEL NUMBER	PART NUMBER	REQUIRED NUMBER				
				K-0				
48a	T2 SCREW	4X8	7P31-0408	2				
49	ELBOW	COPPER	4A1059-01	1				
50	ELBOW	COPPER	417395-03	1				
51	INSULATION TUBE	L=670	7762-1323	1				
52	ENDCAP	-	4A1413F01	2				

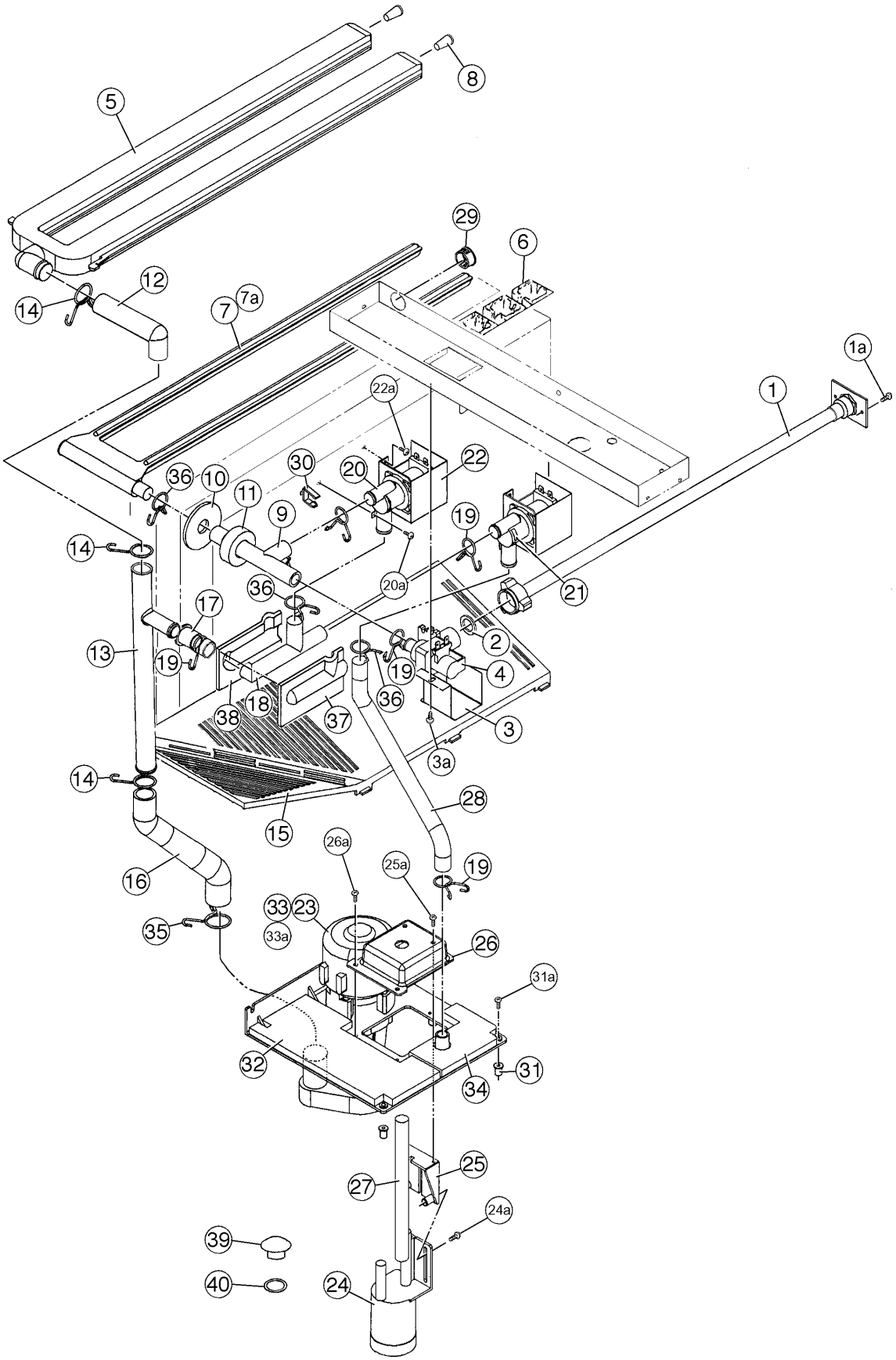
5
8
29
6
12
14
7
7a
1a
1
22a
22
30
20
36
10
11
9
19
14
20a
21
36
17
2
13
19
19
4
18
36
38
37
3
3a
14
28
15
26a
25a
19
16
33
23
35
33a
26
31a
32
31
34
25
27
24a
39
40
24

MODEL: **KML-350MAF, MWF** TITLE: **C. WATER CIRCUIT**								
INDEX NO.	DESCRIPTION	MATERIAL OR MODEL NUMBER	PART NUMBER	REQUIRED NUMBER				
				K-0				
1	WATER SUPPLY PIPE	COPPER	4A0768G04	1				
1a	T2 SCREW	4X8	7P31-0408	2				
2	RUBBER GASKET	NR	413854-03	1				
3	WATER VALVE BRACKET	GS	321443-01	1				
3a	T2 SCREW	4X8	7P31-0408	1				
4	WATER VALVE	J248-072	3U0111-04	1				
5	SPRAY TUBE	PE	1A0260-02	1				
6	SPRAY GUIDE (A)	PE	208586-01	6				
7	WATER SUPPLY TUBE	PE	2A0079-01	1				
7a	T2 SCREW	4X8	7P31-0408	2				
8	PLUG	EPDM	4A0176-01	2				
9	WATER SUPPLY TEE	SANTOPRENE	4A1006-01	1				
10	FLANGE	EPDM	439267-01	1				
11	INSULATION (E)	PE FOAM	4A0392-01	1				
12	ELBOW	SANTOPRENE	4A0393-01	1				
13	CONNECTING PIPE	PE	3A1335-01	1				
14	HOSE CLAMP	SS, 25 mm	427443-03	3				
15	CUBE GUIDE (A)	ABS	2A0660-01	1				
16	PUMP HOSE	EPDM	4A1007-01	1				
17	RUBBER RING	EPDM	4A1004-01	1				
18	BYPASS HOSE	SANTOPRENE	4A1005-01	1				
19	HOSE CLAMP	SS, 18 mm	427443-05	5				
20	SOLENOID VALVE	207CB-GS1873	439322-01	2				
20a	T2 SCREW	4X8	7P31-0408	4				
21	ARROW LABEL	PES	4A0096-01	1				
22	SOLENOID COVER	GS	4A0996-01	2				
22a	T2 SCREW	4X8	7P31-0408	4				
23	PUMP	-	2A0749-01	1				
24	FLOAT SWITCH	163795	4A0886-01	1				
24a	T2 SCREW	4X8, SS	7P32-0408	2				
25	FLOAT SWITCH BRACKET	ABS	327757-01	1				

MODEL: **KML-350MAF, MWF** TI1TLE: **C. WATER CIRCUIT**								
INDEX NO.	DESCRIPTION	MATERIAL OR MODEL NUMBER	PART NUMBER	REQUIRED NUMBER				
				K-0				
25a	T2 SCREW	4X12, SS	7P32-0412	2				
26	FLOAT SWITCH COVER	ABS	3A0665-01	1				
26a	T2 SCREW	4X12, SS	7P32-0412	2				
27	VINYL HOSE	L=150	7716-1216	1				
28	VINYL HOSE	L=285	7716-1519	1				
29	BUSHING	OCB-875	428394-04	1				
30	WIRE SADDLE	VWS4238-C	4A0338-02	8				
31	WELL NUT	347011	4A1070-01	2				
31a	TRUSS HEAD SCREW	4X16, SS	7C32-0416	4				
32	INSULATION (A) – PUMP BRACKET	PE FOAM	4A1052-01	1				
33	TOOTH WASHER	ZINC, M4	7R21-0400	1				
33a	TRUSS HEAD SCREW	4X16	7C31-0416	1				
34	INSULATION (B) – PUMP BRACKET	PE FOAM	4A1053-01	1				
35	HOSE CLAMP	SS, 27 mm	427443-08	1				
36	HOSE CLAMP	SS. 20 mm	427443-06	3				
37	INSULATION (A1) – BYPASS HOSE	NP	4A1259-01	1				
38	INSULATION (A2) – BYPASS HOSE	NP	4A1260-01	1				
39	DRAIN	POLYACETAL	309246-01	1				
40	O-RING	1AP15	7611-P015	1				

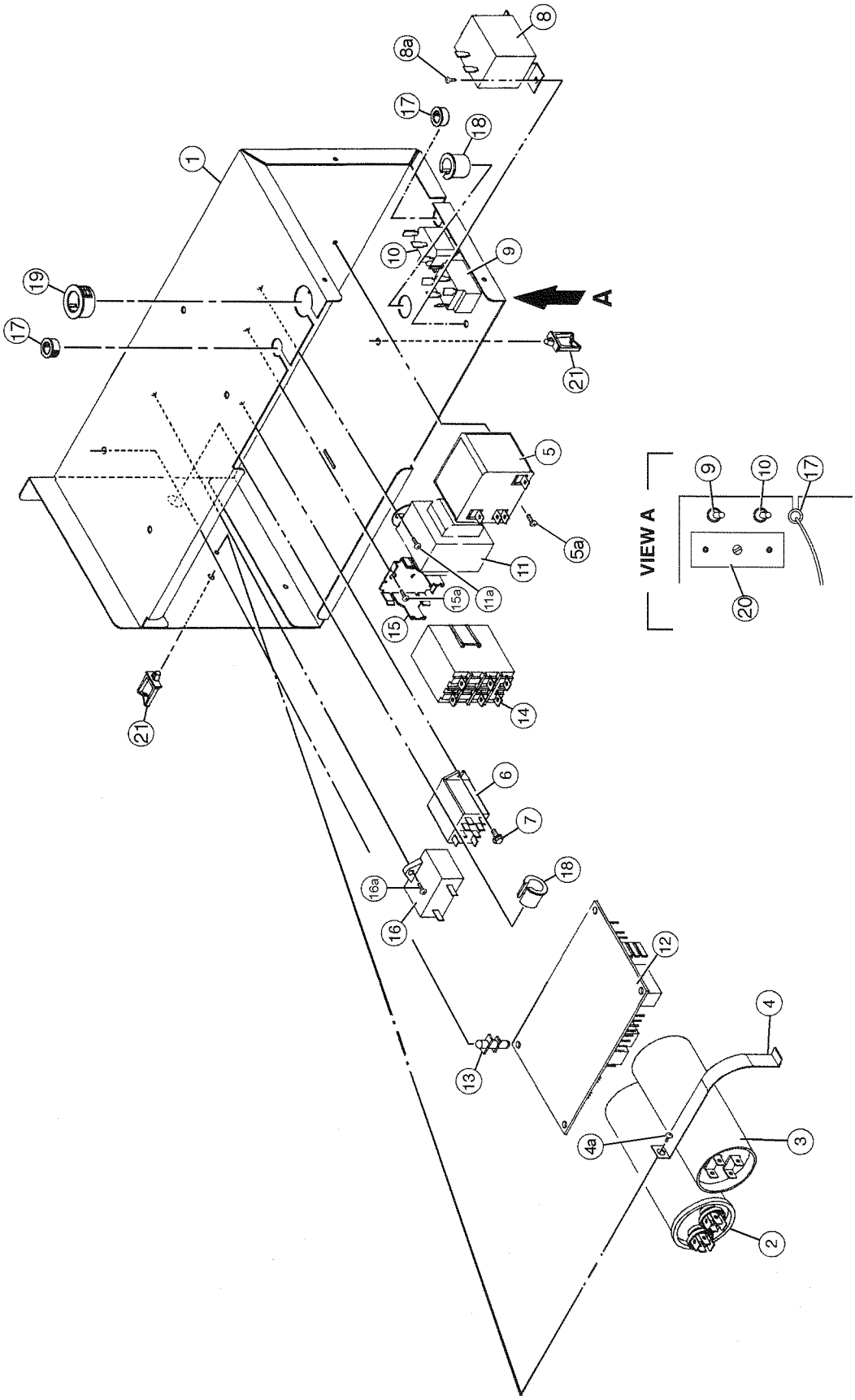
1
2
3
4
4a
5
5a
6
7
8
8a
9
10
11
11a
12
13
14
15
15a
16
16a
17
18
19
20
21
A
VIEW A

MODEL: **KML-350MAF** TITLE: **D. CONTROL BOX ASSEMBLY**								
INDEX NO.	DESCRIPTION	MATERIAL OR MODEL NUMBER	PART NUMBER	REQUIRED NUMBER				
				K-0				
1	CONTROL BOX	GS	3A0602G01	1				
2	CAPACITOR	15µf 370 VAC	439943-04	1				
3	CAPACITOR - STARTING	243-292µf 115V	3A0076-10	1				
4	STRAP	GS	434580-10	1				
4a	T2 SCREW	4X8	7P31-0408	1				
5	STARTER	-	4A1107-11	1				
5a	T2 SCREW	4X8	7P31-0408	1				
6	RELAY	LY2F 120 VAC	406132-07	1				
7	TAPPING SCREW	3X8	431415-01	2				
8	THERMOSTAT	A30-3815-00	4A0824-01	1				
8a	TRUSS HEAD SCREW	4X8	7C31-0408	2				
9	TOGGLE SWITCH	7563K6	443119-01	1				
10	TOGGLE SWITCH	8966K211	4A0985-01	1				
11	TRANSFORMER	26D285H	3A0172-01	1				
11a	T2 SCREW	4X8	7P31-0408	2				
12	CONTROLLER BOARD	HOS001A	2A1410-01	1				
13	BOARD SUPPORT	CBLS37-M	4A0336-03	4				
14	MAGNETIC CONTACTOR	VC20	428393-01	1				
15	BRACKET	BW 9154	428393F01	1				
15a	T2 SCREW	4X8	7P31-0408	2				
16	CAPACITOR	5µf 250 VAC	443192-02	1				
16a	T2 SCREW	4X8	7P31-0408	1				
17	BUSHING	OCB-500	428394-02	2				
18	BUSHING	OCB-625	428394-03	2				
19	BUSHING	OCB-875	428394-04	1				
20	CONTROL LABEL	PES FILM	4A1758-01	1				
21	WIRE SADDLE	VWS4238-C	4A0338-02	2				

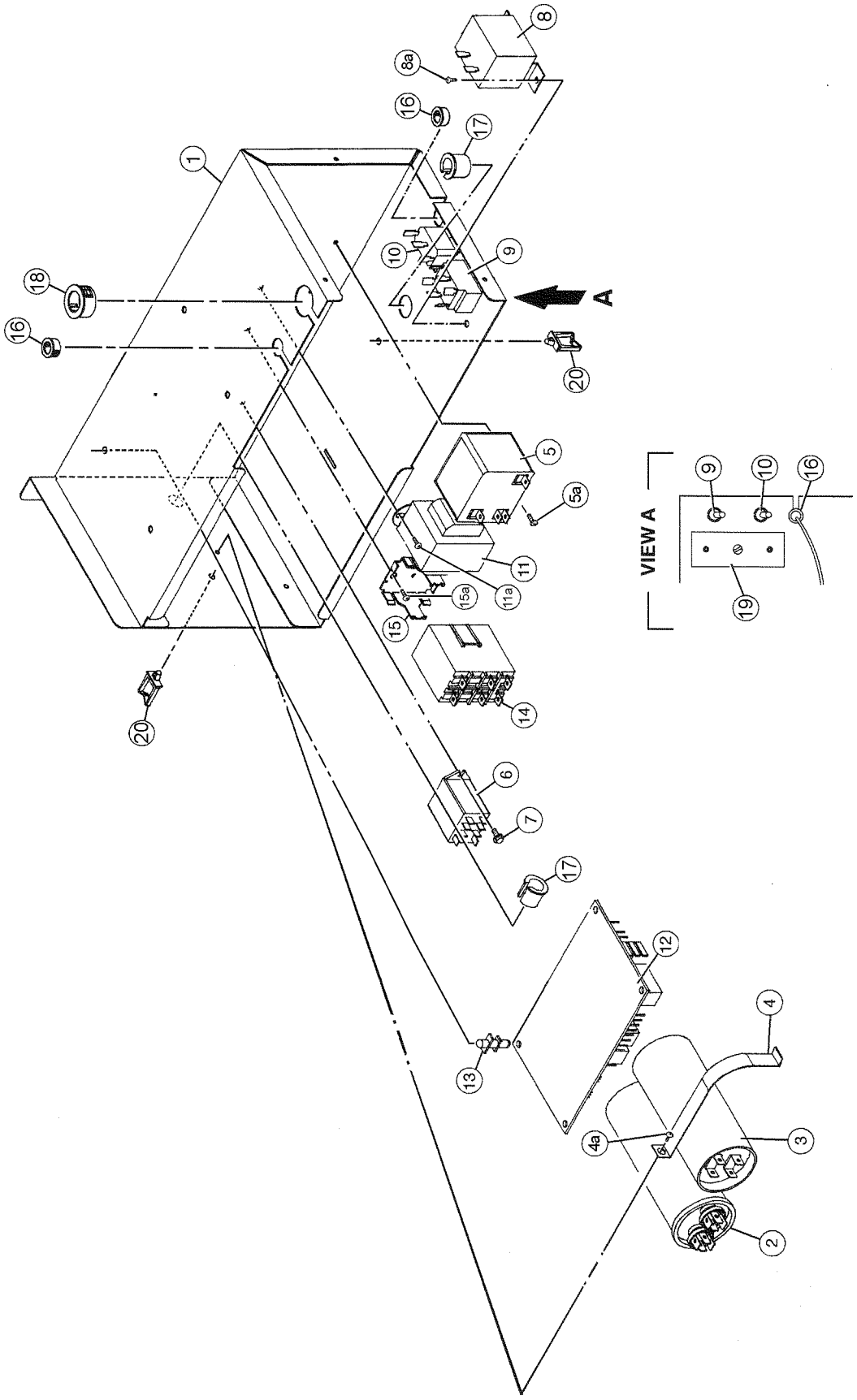
1
2
3
4
4a
5
5a
6
7
8
8a
9
10
11
11a
12
13
14
15
15a
16
17
18
19
20
A
VIEW A

MODEL: **KML-350MWF** TITLE: **D. CONTROL BOX ASSEMBLY**								
INDEX NO.	DESCRIPTION	MATERIAL OR MODEL NUMBER	PART NUMBER	REQUIRED NUMBER				
				K-0				
1	CONTROL BOX	GS	3A0602G01	1				
2	CAPACITOR	15µf 370 VAC	439943-04	1				
3	CAPACITOR - STARTING	243-292µf 115V	3A0076-10	1				
4	STRAP	GS	434580-12	1				
4a	T2 SCREW	4X8	7P31-0408	1				
5	STARTER	-	4A1107-11	1				
5a	T2 SCREW	4X8	7P31-0408	1				
6	RELAY	LY2F 120 VAC	406132-07	1				
7	TAPPING SCREW	3X8	431415-01	2				
8	THERMOSTAT	A30-3815-00	4A0824-01	1				
8a	TRUSS HEAD SCREW	4X8	7C31-0408	2				
9	TOGGLE SWITCH	7563K6	443119-01	1				
10	TOGGLE SWITCH	8966K211	4A0985-01	1				
11	TRANSFORMER	26D285H	3A0172-01	1				
11a	T2 SCREW	4X8	7P31-0408	2				
12	CONTROLLER BOARD	HOS001A	2A1410-01	1				
13	BOARD SUPPORT	CBLS37-M	4A0336-03	4				
14	MAGNETIC CONTACTOR	VC20	428393-01	1				
15	BRACKET	BW 9154	428393F01	1				
15a	T2 SCREW	4X8	7P31-0408	2				
16	BUSHING	OCB-500	428394-02	2				
17	BUSHING	OCB-625	428394-03	2				
18	BUSHING	OCB-875	428394-04	1				
19	CONTROL LABEL	PES FILM	4A1758-01	1				
20	WIRE SADDLE	VWS4238-C	4A0338-02	2				

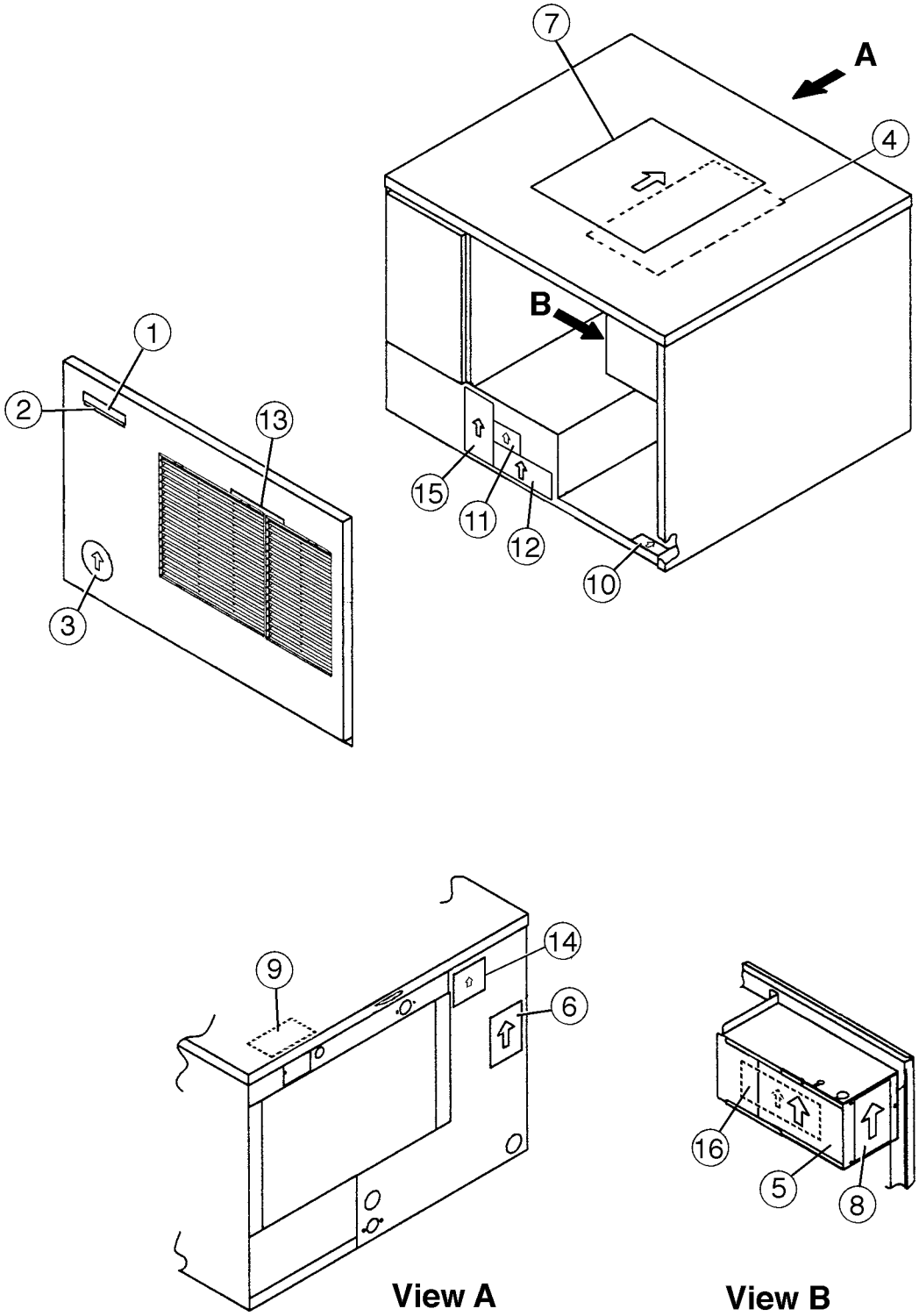
7
A
4
B
1
2
13
15
11
12
10
3
9
14
6
16
5
8
View A
View B

MODEL: **KML-350MAF** TITLE: **E. LABEL LOCATION**								
INDEX NO.	DESCRIPTION	MATERIAL OR MODEL NUMBER	PART NUMBER	REQUIRED NUMBER				
				K-0				
1	EMBLEM	PETP FILM	4A0560-01	1				
2	MODEL NUMBER LABEL	PETP FILM	4A1233-59	1				
3	LABEL - PENGUIN - HA (R)	PETP FILM	4A0526-01	1				
4	MAINTENANCE LABEL	PVC FILM	3A1696-01	1				
5	WIRING LABEL	PVC FILM	3A1318-01	1				
6	NAMEPLATE	PES FILM	4A1888-01	1				
7	INSTRUCTION SHEET	PAPER	2A1253-01	1				
8	MANUAL LABEL	PVC FILM	4A1090-01	1				
9	TAG - WARNING: ELECTRICAL CONNECTION	PAPER	435005-01	1				
10	LABEL – R404A	PES FILM	4A0960-01	1				
11	CAUTION LABEL (F)	PVC FILM	439146-01	1				
12	CAUTION LABEL (K)	PVC FILM	439150-01	1				
13	LABEL - AIR FILTER	PETP FILM	426177-01	1				
14	INSTRUCTION LABEL	PVC FILM	444575-01	1				
15	RATING LABEL	PES FILM	4A1889-01	1				
16	LABEL- CONTROL BOARD	PVC FILM	3A1272-01	1				

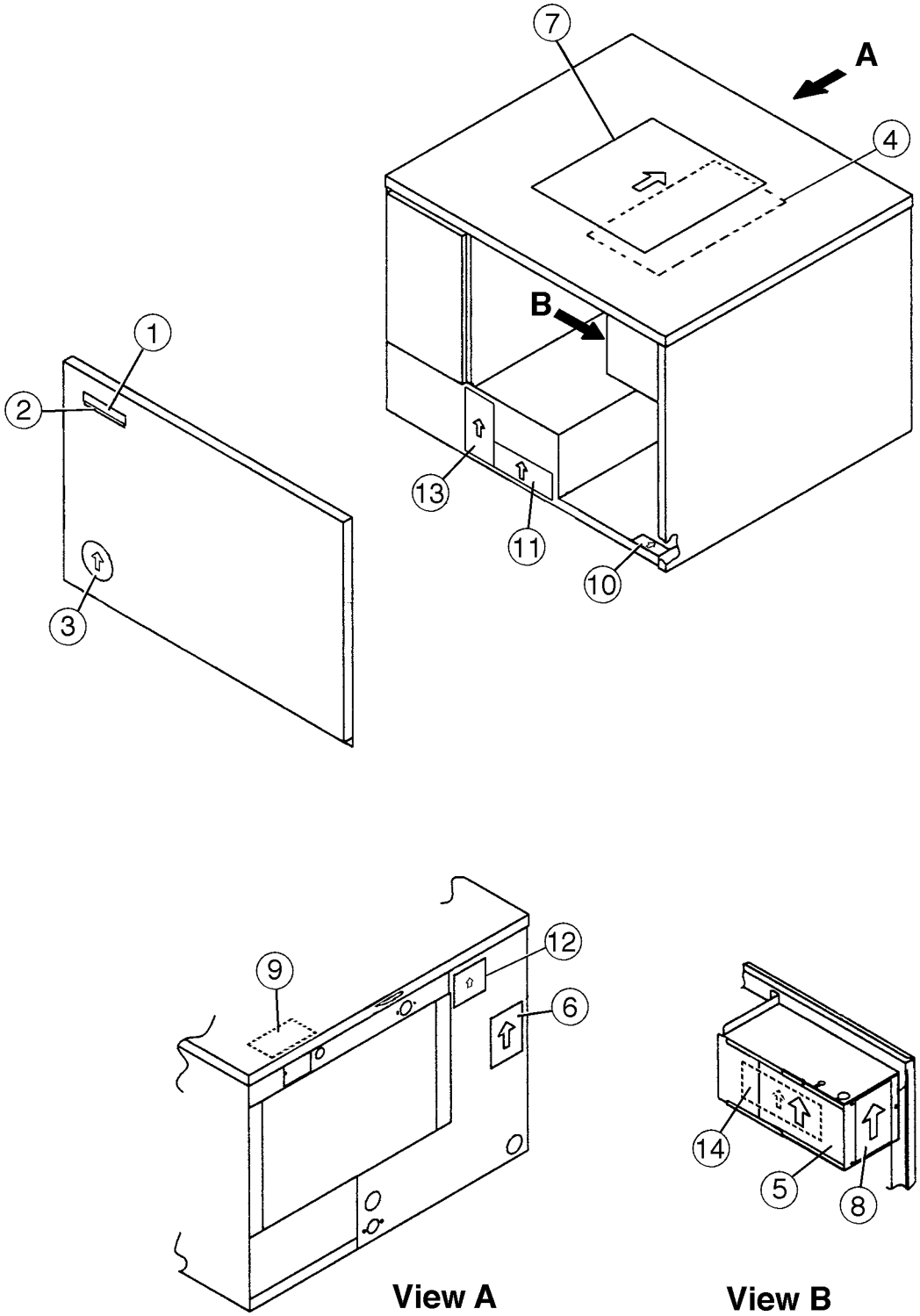
7
A
4
B
1
2
13
11
10
3
9
12
6
14
5
8
View A
View B

MODEL: **KML-350MWF** TITLE: **E. LABEL LOCATION**								
INDEX NO.	DESCRIPTION	MATERIAL OR MODEL NUMBER	PART NUMBER	REQUIRED NUMBER				
				K-0				
1	EMBLEM	PETP FILM	4A0560-01	1				
2	MODEL NUMBER LABEL	PETP FILM	4A1233-60	1				
3	LABEL - PENGUIN - HA (R)	PETP FILM	4A0526-01	1				
4	MAINTENANCE LABEL	PVC FILM	3A1696-01	1				
5	WIRING LABEL	PVC FILM	3A1318-01	1				
6	NAMEPLATE	PES FILM	4A1890-01	1				
7	INSTRUCTION SHEET	PAPER	2A1253-01	1				
8	MANUAL LABEL	PVC FILM	4A1090-01	1				
9	TAG - WARNING: ELECTRICAL CONNECTION	PAPER	435005-01	1				
10	LABEL – R404A	PES FILM	4A0960-01	1				
11	CAUTION LABEL (K)	PVC FILM	439150-01	1				
12	INSTRUCTION LABEL	PVC FILM	444575-01	1				
13	RATING LABEL	PES FILM	4A1891-01	1				
14	LABEL-CONTROL BOARD	PES FILM	3A1272-01	1				

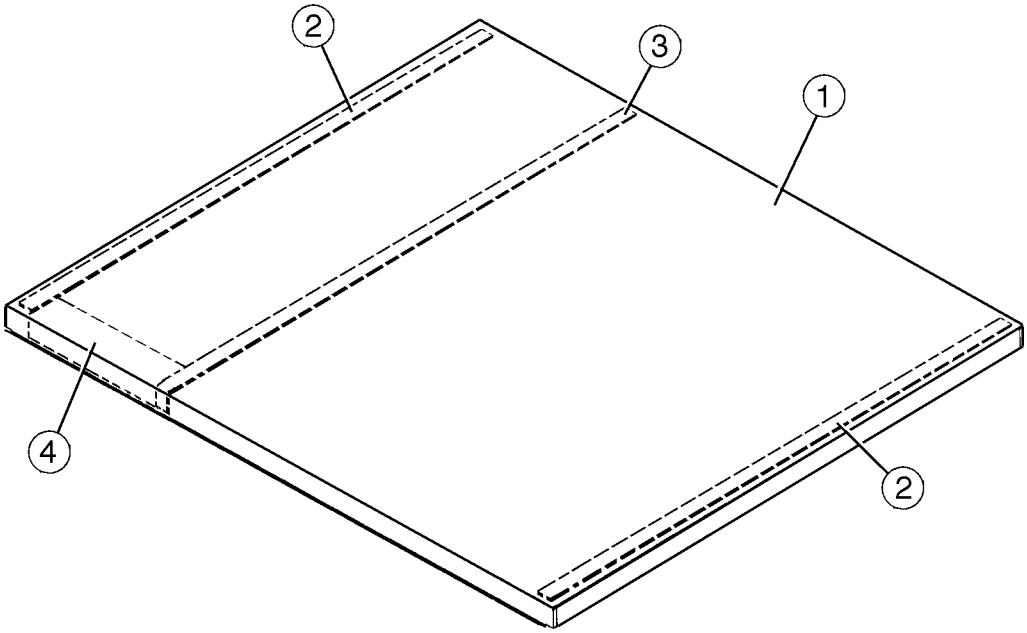
2
3
1
4
2

MODEL: **KML-350MAF, MWF** TITLE: **F. TOP PANEL ASSEMBLY**								
INDEX NO.	DESCRIPTION	MATERIAL OR MODEL NUMBER	PART NUMBER	REQUIRED NUMBER				
				K-0				
1	TOP PANEL	SS	213543-01	1				
2	GASKET	PVC	427014-04	2				
3	GASKET (A)	NORMOUNT V710	324859-03	1				
4	INSULATION	PE FOAM	438012-01	1				

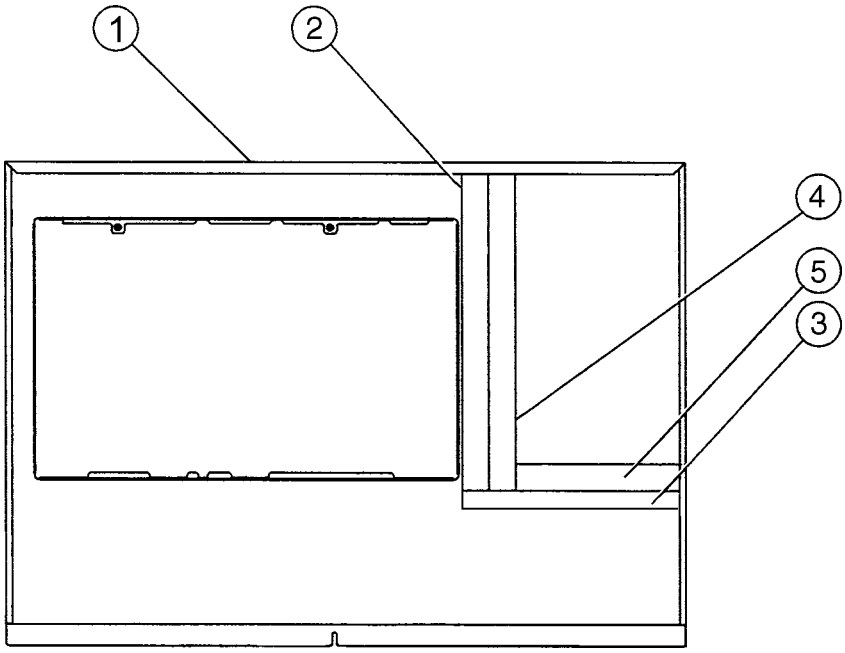
1
2
4
5
3

MODEL: **KML-350MAF** TITLE: **G. FRONT PANEL ASSEMBLY**								
INDEX NO.	DESCRIPTION	MATERIAL OR MODEL NUMBER	PART NUMBER	REQUIRED NUMBER				
				K-0				
1	FRONT PANEL (A)	SS	2A1455-01	1				
2	FOAM SEAL	L=370	4A0661L01	1				
3	FOAM SEAL	L=250	4A0661L01	1				
4	FOAM SEAL	L=370	4A1163L01	1				
5	FOAM SEAL	L=190	4A1163L01	1				

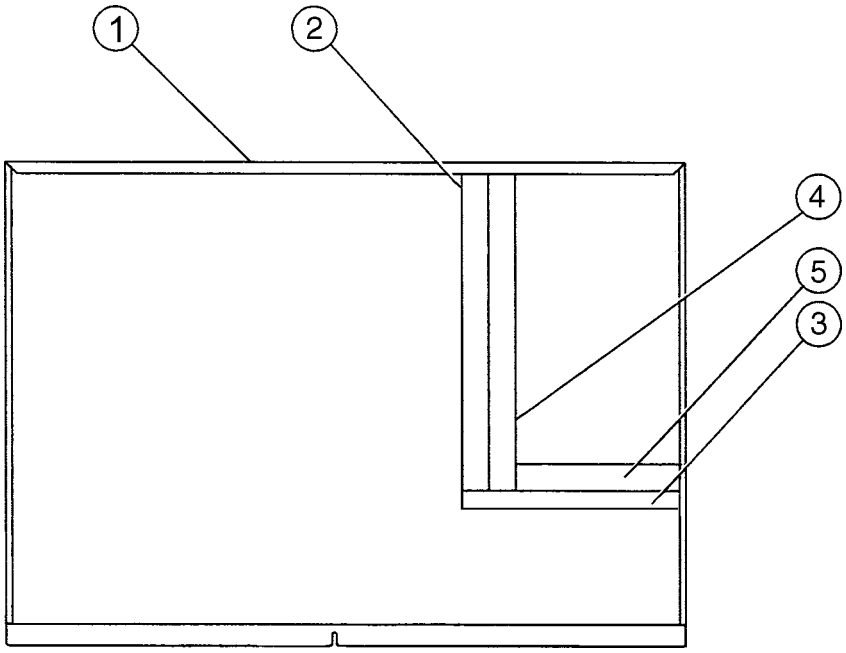
1
2
4
5
3

MODEL: **KML-350MWF** TITLE: **G. FRONT PANEL ASSEMBLY**								
INDEX NO.	DESCRIPTION	MATERIAL OR MODEL NUMBER	PART NUMBER	REQUIRED NUMBER				
				K-0				
1	FRONT PANEL (A)	SS	2A1454-01	1				
2	FOAM SEAL	L=370	4A0661L01	1				
3	FOAM SEAL	L=250	4A0661L01	1				
4	FOAM SEAL	L=370	4A1163L01	1				
5	FOAM SEAL	L=190	4A1163L01	1				

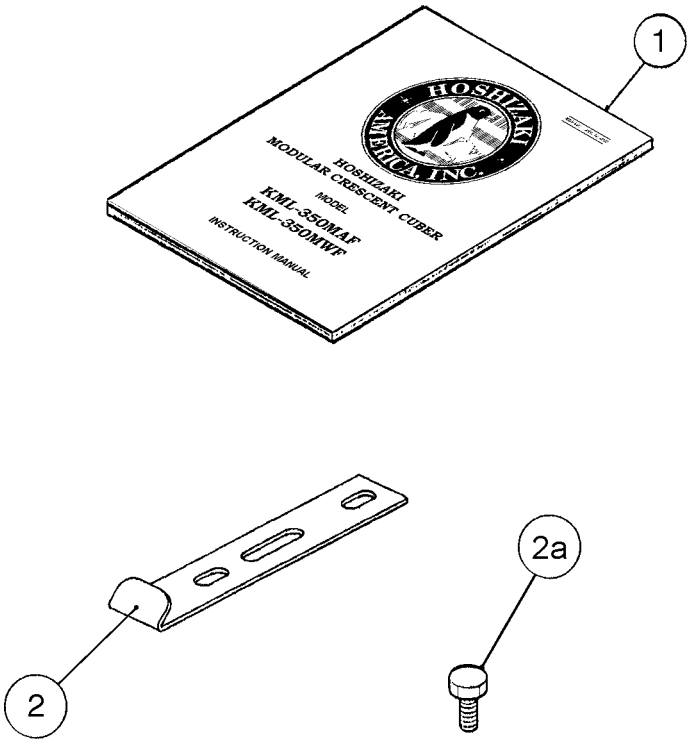
1
HOSHIZAKI AMERICA, INC.
HOSHIZAKI
MODULAR CRESCENT CUBER
MODEL
KML-350MAF
KML-350MWF
INSTRUCTION MANUAL
2
2a

MODEL: **KML-350MAF, MWF** TITLE: **H. ACCESSORIES**								
INDEX NO.	DESCRIPTION	MATERIAL OR MODEL NUMBER	PART NUMBER	REQUIRED NUMBER				
				K-0				
1	INSTRUCTION MANUAL	PAPER	91A1CC10A	1				
2	UNIVERSAL BRACE	GS	4A0363-01	2				
2a	HEX HEAD BOLT	5X12, SS	7B02-0512	2				