EPK ETL 2012 => ...

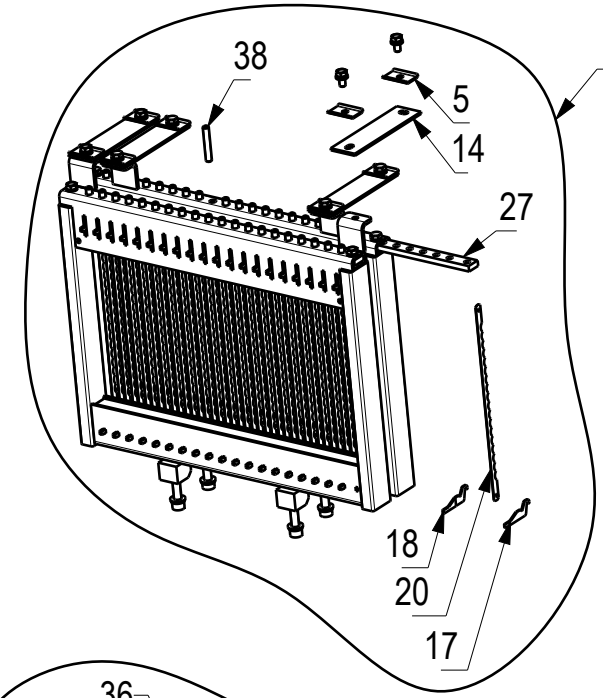

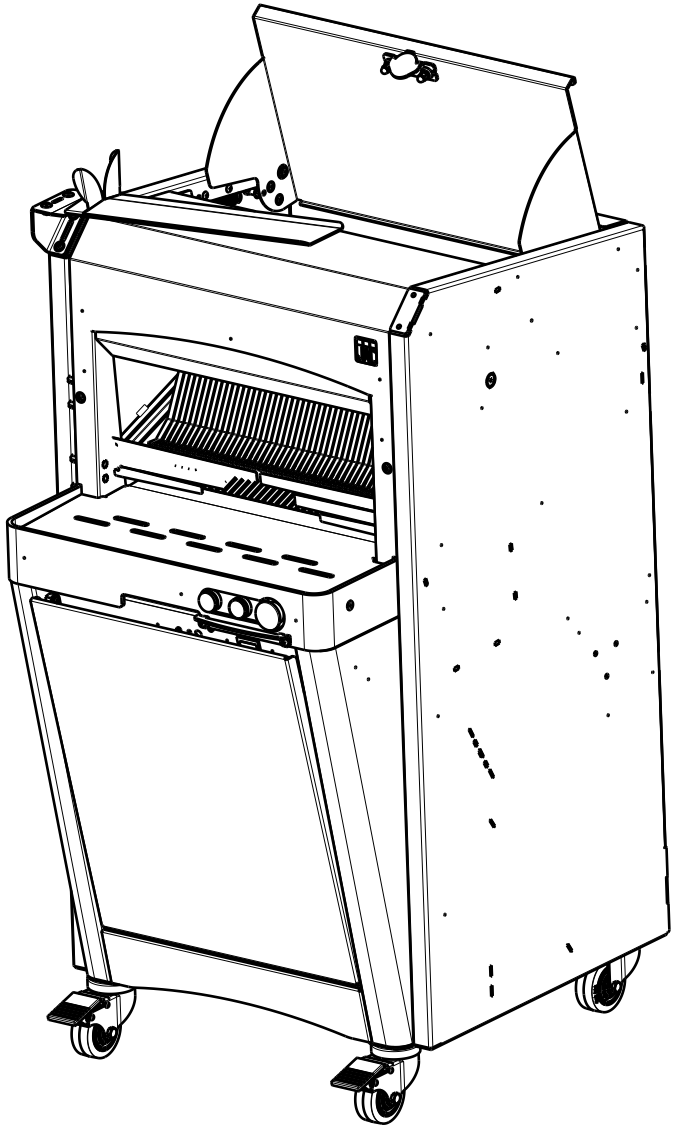

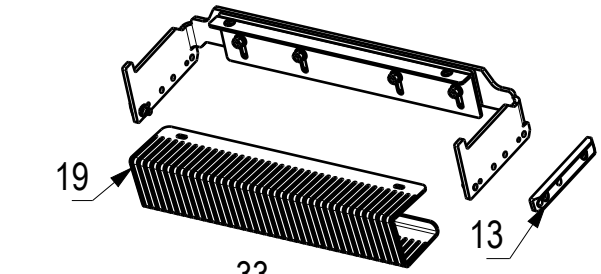

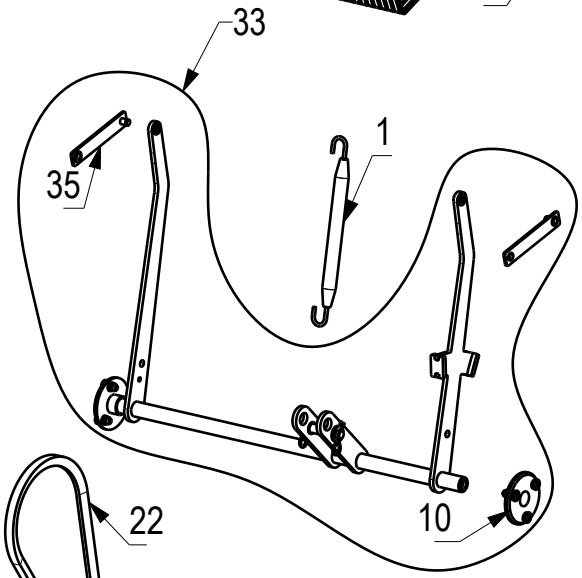

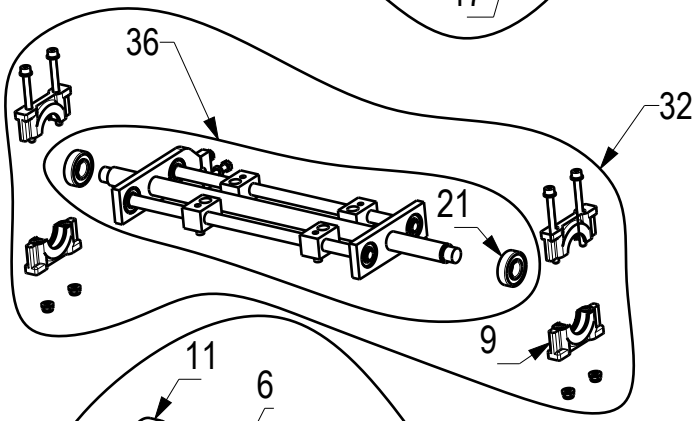

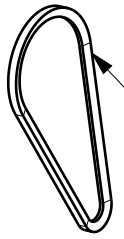

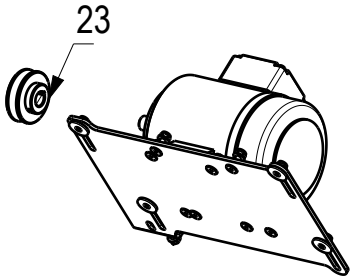

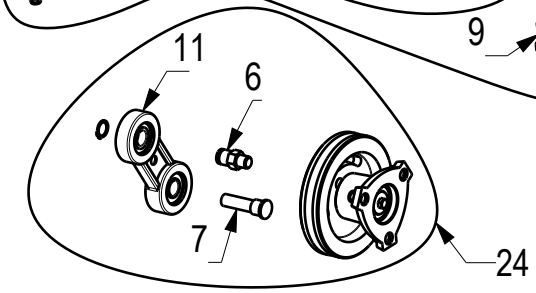

EPK ETL 2012 => ...

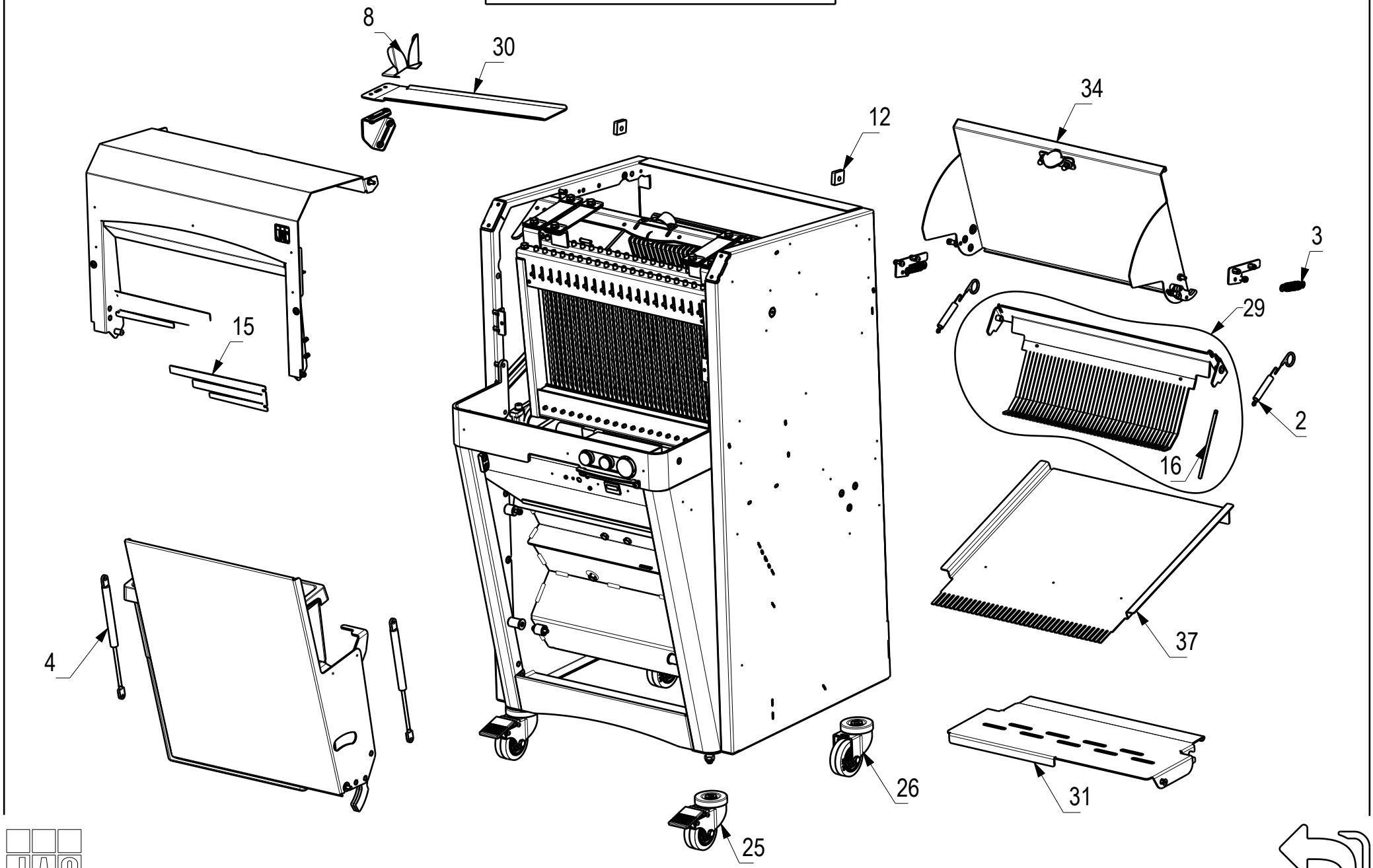

JAC Traditionally Innovative

EPK ETL 2012=>...

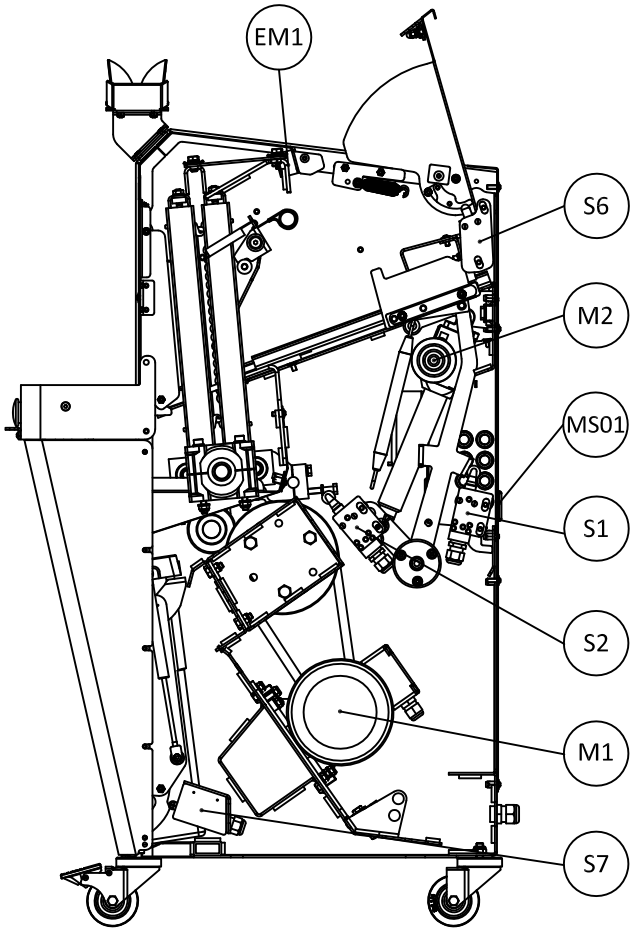

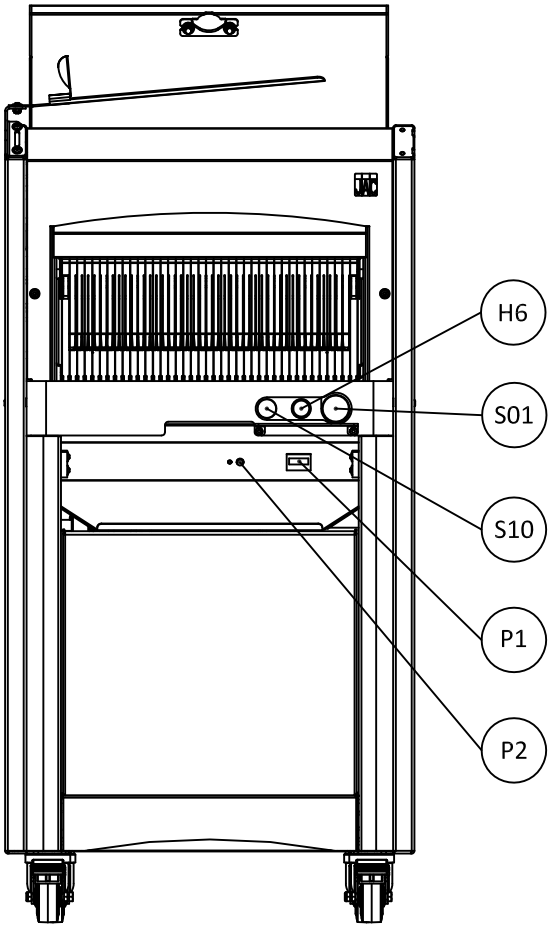

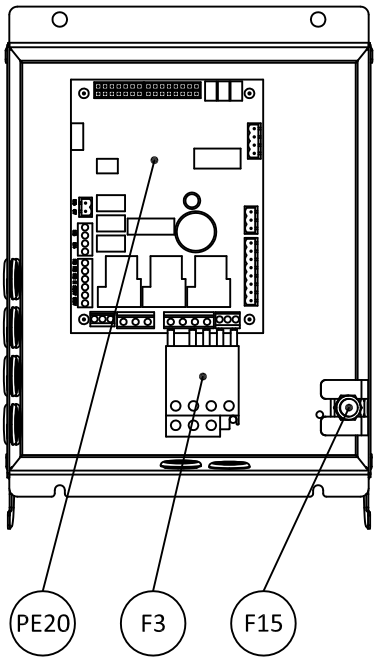

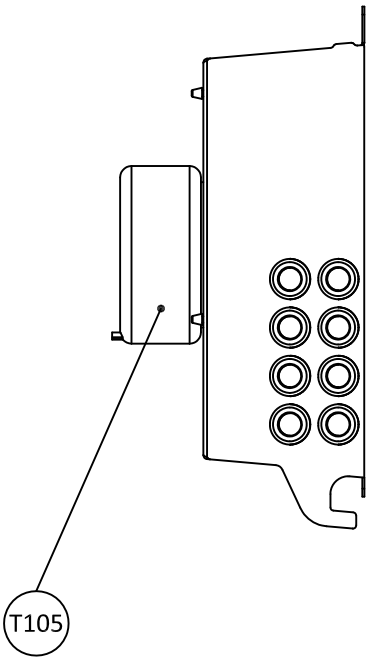

EPK ETL 2012 => ...

REP	QTE	N°	
1	1	5310024	
2	2	5310026	
3	2	5310039	
4	2	5315013	
5	8	P40257	
6	1	5540018	
7	1	5540019	
8	1	5590011	
9	4	5610003	
10	2	5610004	
11	1	5610005	
12	2	5630021	
13	2	5690012	
14	4	P40280	
15	2	5690102	
16	2	5690151	
17	96	5740067	
18	96	5740068	
19	1	3-01406-450	50 mm
19	1	3-00950-450	80 mm
19	1	3-00951-450	100 mm
20	100	6110002	10 mm 0,5
20	100	6110001	13 mm 0,5
20	100	6110011	13 mm 0,5 + T
21	2	7210011	
22	1	7240031	
23	1	7260004	
24	1	7320001	
25	2	7930036	
26	2	7930037	
27	2	3-00817-450	
28	1	3-01441-450	
29	1	4-04635	
30	1	BEPLC043	
31	1	BEPLC067	
32	1	BEPLE002	
33	1	BEPLS003	
34	2	BEPLE015	
35	2	BEPLS004	
36	1	BEPLS013	
37	1	BEPLS015	
38	48	VO91301	

REP	QTE	N°	
EM1	1	6320050	
F15	1	6720062	
F3	1	6430015	
H6	1	6310066	
M1	1	6620025	1~120V
M2	1	6630033	
MS01	1	6310054	
P1	1	6780002	
P2	1	6510018	
PE20	1	6510042	
S01	1	6310007	
S1	1	6340002	
S10	1	6310065	
S2	1	6340002	
S6	1	6340018	
S7	1	6340010	
T105	1	6410022	