HUSSMANN®/CHINO
Q1-FC/FS
SINGLE DECK SERVICE
SEAFOOD MERCHANDISER

Installation & Operation Manual
REV. 0923

HUSSMANN®

Q1-FC/FS
Single Deck Service Seafood Merchandiser

INSTALLATION & OPERATION GUIDE

1. General Instructions

HUSSMANN®/CHINO

A publication of HUSSMANN® Chino
13770 Ramona Avenue • Chino, California 91710
(909) 628-8942 FAX
(909) 590-4910
(800) 395-9229
www.hussmann.com

This Booklet Contains Information on:
Q1-FC/FS Single Deck Service Seafood Merchandiser.

Shipping Damage

All equipment should be thoroughly examined for shipping damage before and during unloading.

This equipment has been carefully inspected at our factory and the carrier has assumed responsibility for safe arrival. If damaged, either apparent or concealed, claim must be made to the carrier.

Apparent Loss or Damage

If there is an obvious loss or damage, it must be noted on the freight bill or express receipt and signed by the carrier's agent; otherwise, carrier may refuse claim. The carrier will supply necessary claim forms.

Concealed Loss or Damage

When loss or damage is not apparent until after equipment is uncrated, a claim for concealed damage is made. Make request in writing to carrier for inspection within 15 days, and retain all packaging. The carrier will supply inspection report and required claim forms.

Shortages

Check your shipment for any possible shortages of material. If a shortage should exist and is found to be the responsibility of Hussmann Chino, notify Hussmann Chino. If such a shortage involves the carrier, notify the carrier immediately, and request an inspection. Hussmann Chino will acknowledge shortages within ten days from receipt of equipment.

Hussmann Chino Product Control

The serial number and shipping date of all equipment has been recorded in Hussmann's files for warranty and replacement part purposes. All correspondence pertaining to warranty or parts ordering must include the serial number of each piece of equipment involved, in order to provide the customer with the correct parts.

Keep this booklet with the case at all times for future reference.

2. Table of Contents

1. General Instructions.....2

2. Table of Contents 3

3. Cut and Plan Views 4

4. Installation.....5

5. Plumbing 13

6. Refrigeration 13

7. Electrical.....16

8. Finishing Touches 17

9. User Information.....17

10. Maintenance.....19

11. Wiring Diagram Index …… 20

12. Wiring Diagrams 21

13. Troubleshooting Guide 27

3. Cut and Plan Views

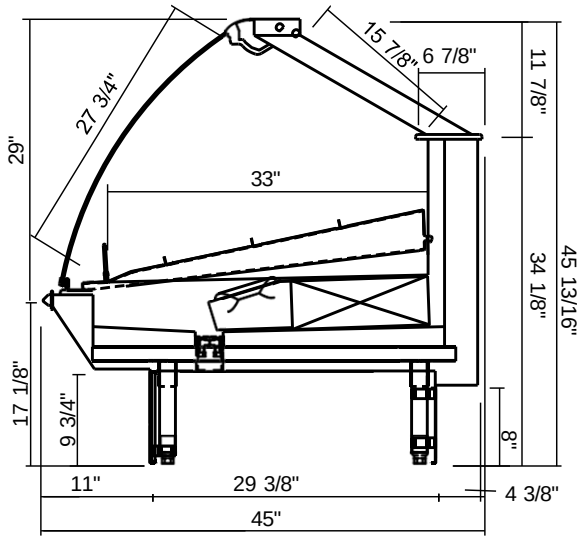

Q1-FC
Single Deck Fish- Curved Glass

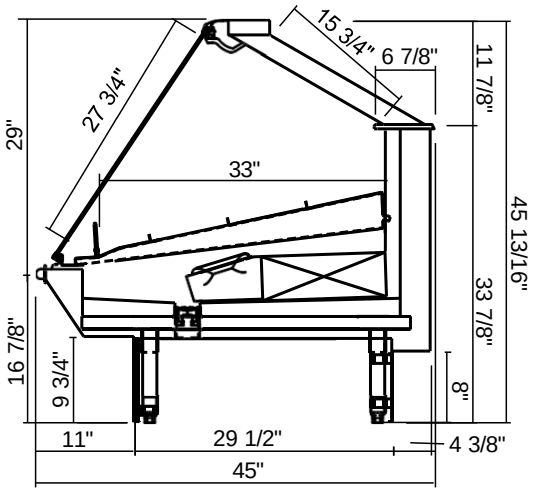

Q1-FS
Single Deck Fish- Straight Glass

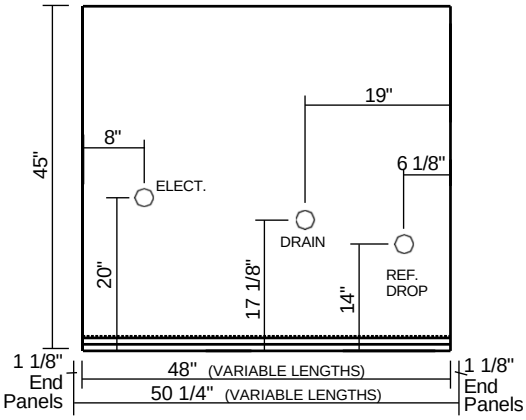

Q1-FC Plan View
Straight Section

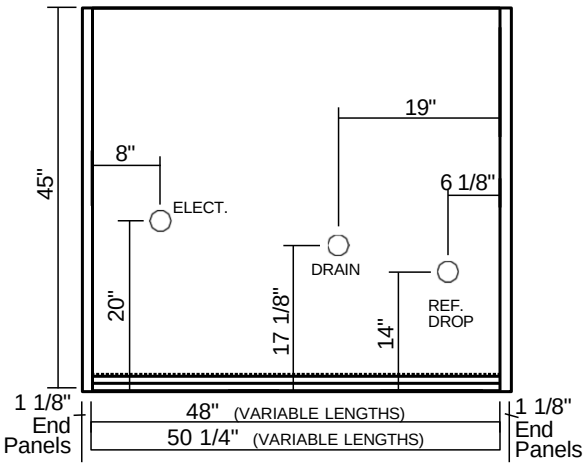

Q1-FS Plan View
Straight Section

4. Installation

Location

The refrigerated merchandisers have been designed for use only in air conditioned stores where temperature and humidity are maintained at or below 75°F and 55% relative humidity. DO NOT allow air conditioning, electric fans, ovens, open doors or windows (etc.) to create air currents around the merchandiser, as this will impair its correct operation.

Product temperature should always be maintained at a constant and proper temperature. This means that from the time the product is received, through storage, preparation and display, the temperature of the product must be controlled to maximize life of the product.

Uncrating the Stand

Place the fixture as close to its permanent position as possible. Keep in place, attached case until ready to set/bolt to adjoining case.

Tighten Glass Screws

Tighten screws along clamshell located on the underside of glass before placing unit into operation.

Exterior Loading

These models have **not** been structurally designed to support excessive external loading. **Do not walk on their tops;** This could cause serious personal injury and damage to the fixture.

Setting and Joining

The sectional construction of these models enable them to be joined in line to give the effect of one continuous display.

An Alignment pin kit is supplied with every case and must be used in alignment.

Leveling

IMPORTANT! IT IS IMPERATIVE THAT CASES BE LEVELED FROM FRONT TO BACK AND SIDE TO SIDE PRIOR TO JOINING. A LEVEL CASE IS NECESSARY TO INSURE PROPER OPERATION, WATER DRAINAGE, GLASS ALIGNMENT, AND OPERATION OF THE HINGES SUPPORTING THE GLASS. LEVELING THE CASE CORRECTLY WILL SOLVE ALL HINGE OPERATION AND GLASS PROBLEMS.

NOTE: A. To avoid removing concrete flooring, begin lineup leveling from the highest point of the store floor.

B. When wedges are involved in a lineup, set them first.

All cases were leveled and joined prior to shipment to insure the closest possible fit when cases are joined in the field. When joining, use a carpenters level and adjust legs accordingly. The legs on the Q1-FC/FS are adjustable and do not require shims. Simply screw the leg up or down to adjust height.

1. Using case blueprints, measure off and mark on the floor the exact dimensions of where the cases will sit. Snap chalk line for front and back positions of base rail or pedestal. Mark the location of each joint front and back. Find the highest point throughout the lineup. **FLOORS ARE NORMALLY NOT LEVEL!** Determine the highest point of the floor; cases will be set off this point. All cases in the entire lineup must be brought up to the highest level of the case sitting at the highest point in the lineup. This may be done a few different ways.
   a) Walk the floor looking for any mounds or dips.
   b) Use a string level.
   c) Use a transit.
   If a wedge is used in the middle of a lineup, the wedge must be set on the highest point on the floor FIRST, with the rest if the lineup being leveled from it. The Q1-FC/FS case has adjustable legs to allow for leveling.
2. Set first case over the highest part of the floor and adjust legs so that case is level. Remove side and back leg braces after case is set and joined.
3. Set second case within one foot (1') of the first case, and remove leg skids. Keep the supports along the length of the case and far end of case. Level case to the first using the instructions in step one.
4. Apply masking tape 1/8" in from end of case on inside and outside rear mullion and body work on both cases to be joined.

Installation (Cont'd)

5. Apply liberal bead of case joint sealant (butyl) to first case. Sealant area is shown using a dotted line in illustration in Step 8. Apply heavy amount to cover entire shaded area.

DO NOT USE PERMAGUM!

ATTENTION INSTALLER

This equipment is to be installed to comply with the applicable NEC, Federal, State, and Local Plumbing and Construction Code having jurisdiction.

6. Slide second case up to first case snugly. Then level second case to the first case so glass front, bumper and top are flush.

CAUTION

Do not use bolts to pull cases together.

7. To compress butyl at joint, use two Jurgenson wood clamps. Make sure case is level from front to back and side to side on inside bulkheads at joint.

8. Attach sections together via the bolts pictured in the illustration below.
9. Apply bead of butyl to top of bulkheads and slip on stainless steel bulkhead cap. Also apply silicone to seam between overhead light tubes.
10. Use finger to smooth silicone as thin as possible at masking tape on inside and outside of rear mullion (apply additional silicone if necessary). Remove tape applied on line #4.
11. Remove front, back and end shipping braces.

Q1-FC/FS Refrigerated Wedges and Standard Cases

Line-up taper pins and line-up plates with holes on adjoining case. Bolting is located at the rear of the case, behind the air discharge wall, and behind the front body panel. The cases are bolted together in front by means of a bracket located behind the front panel. Remove the front panel by unscrewing these bottom screws.

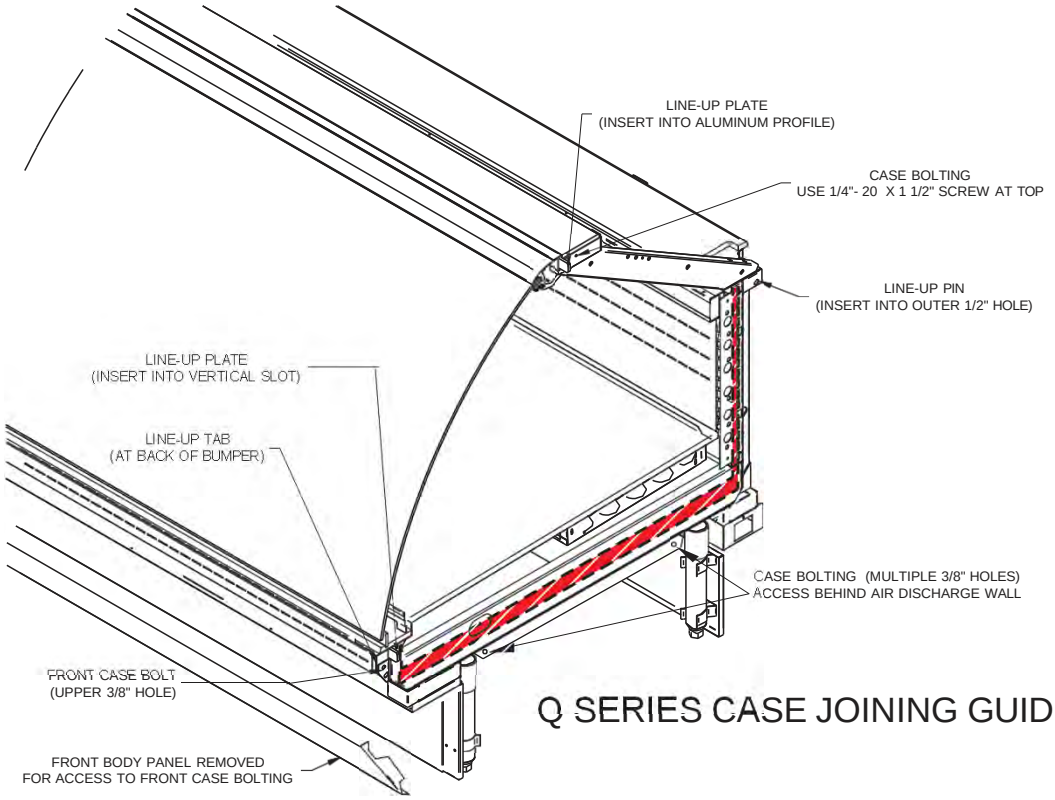

Q SERIES CASE JOINING GUIDE

Installation (Cont'd)

Line Up Tab

Line Up Plate

Q-1 Glass Adjustment

Proper adjustment of the side-to-side position on the glass clamp on Vieler Streamline hardware such as used on Hussmann Q series service cases is critical to proper operation of the glass hardware. Failure to properly adjust the glass clamp can result in failure of the hardware and possible injury to personnel.

When setting or repairing cases, the glass clamp is frequently adjusted from side to side once the cases are set in order to control glass gaps or compensate for poorly installed case line ups. Due to the unique design of this type of hardware, using practices common to other types of hardware can result in the above failures.

Step 1: Level Case

The canopy hardware and glass gaps are set at the factory for proper fit with the Cases Square and level. Before attempting to do any adjustment of the canopy hardware, ensure that the cases are set square and level. Additionally, the adjoining cases must be pulled together tightly.

To adjust the front glass please follow these steps

Before you start any adjustments make sure the cases are level, Front to Back and side to side

Step # 2

To level the cases remove the front and rear close-offs, You can adjust the Height by turning the base leg adjusters

When you turn the leg adjuster clock-wise the case will go up.

When you turn the leg adjuster counter clock-wise the case will go down.

Installation (Cont'd)

IMPORTANT: Attempting to compensate for poor installation practices by manipulating the canopy hardware will result in unsatisfactory workmanship and possibly cause hardware failure and/or injury.

Step 3: Adjust Glass Height

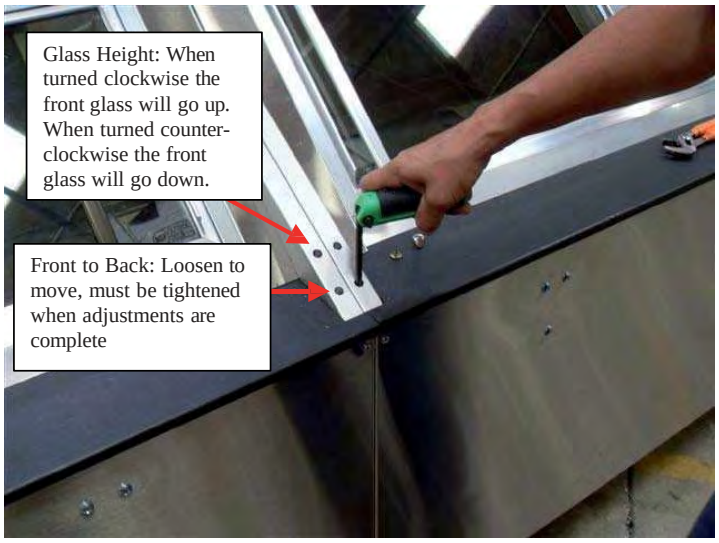

To properly adjust the height of the glass requires that both hinge arms of each section of glass be loosened before attempting to change the glass position.

Glass must be parallel to ledge when viewed from front

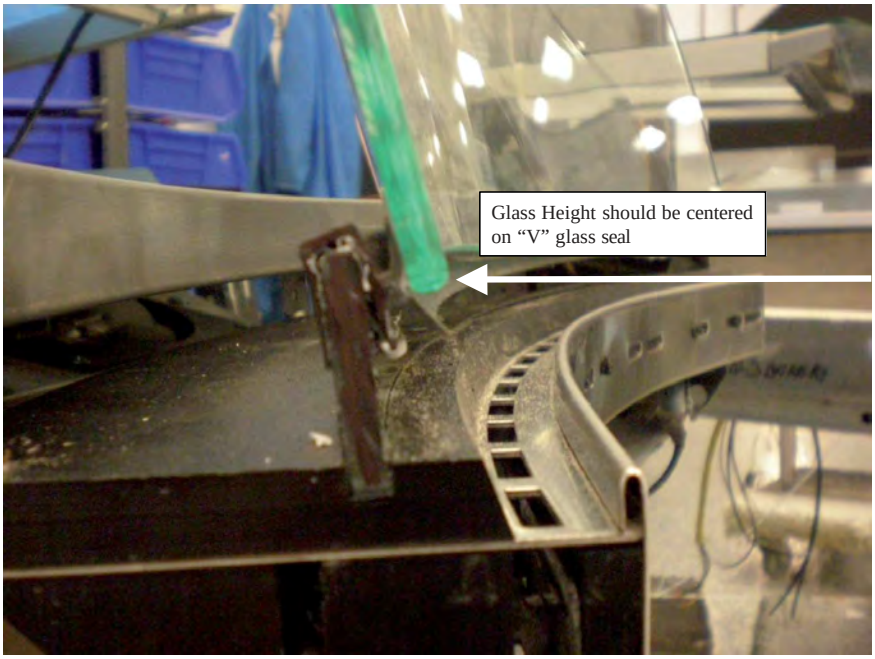

IMPORTANT: Attempting to compensate for poor installation practices by manipulating the canopy hardware will result in unsatisfactory workmanship and possibly cause hardware failure and/or injury.

Installation (Cont'd)

Step 4: Glass Side to Side Adjustment

The glass gaps can be slightly optimized by moving the glass and glass clamp assembly side to side. This should be done as the final adjustment only after the glass/canopy height of the cases are set and leveled to each other. The canopy hardware on adjoining Q Series cases should be screwed together with the ¼"-20 THD screws included with the cases. There are threaded holes provided in the stationary portion of the top hardware for this purpose.

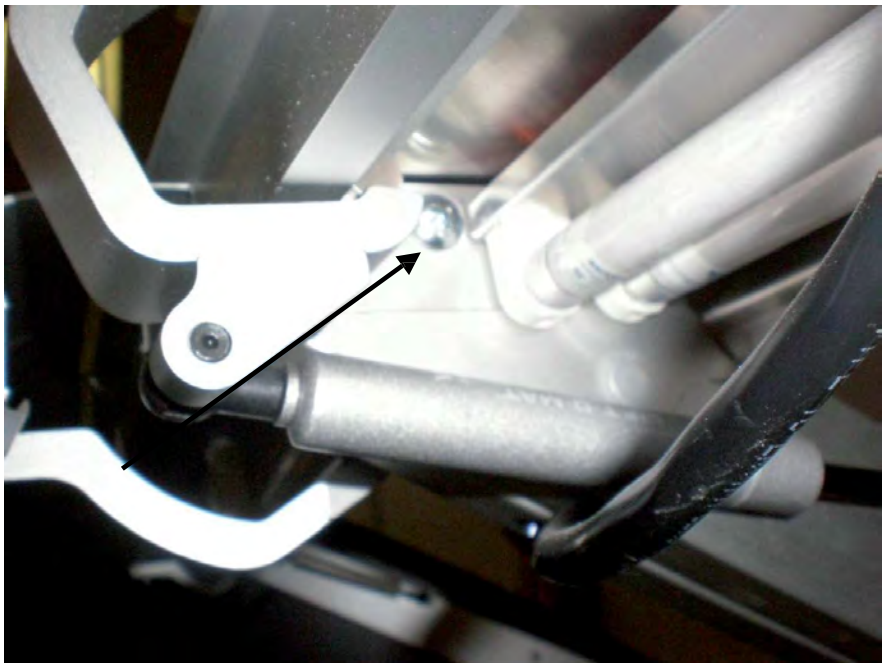

To properly adjust the glass gaps requires that both hinge arms of each section of glass be loosened before attempting to change the glass position.

To shift the glass side to side or front to back at the glass clamp

#1 Open the glass and loosen the Torx T-15 screw

2 Loosen the #10 MM bolt on both sides of the glass as needed

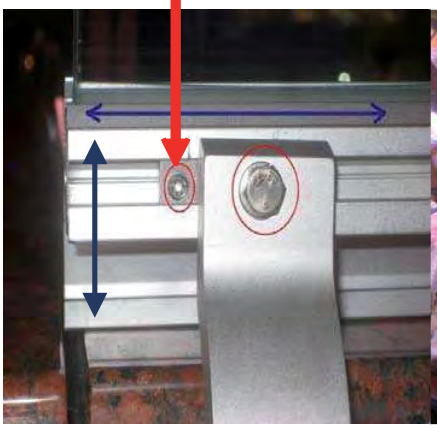

Figure 16

Figure 17

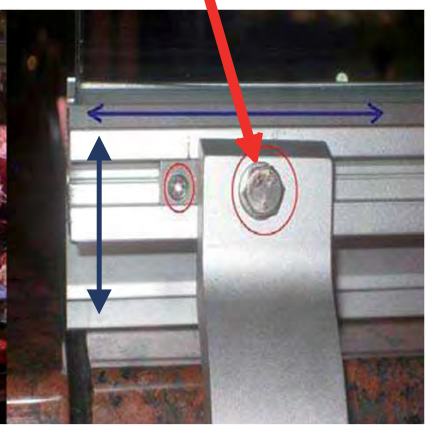

Figure 18

Installation (Cont'd)

Torque Specs:

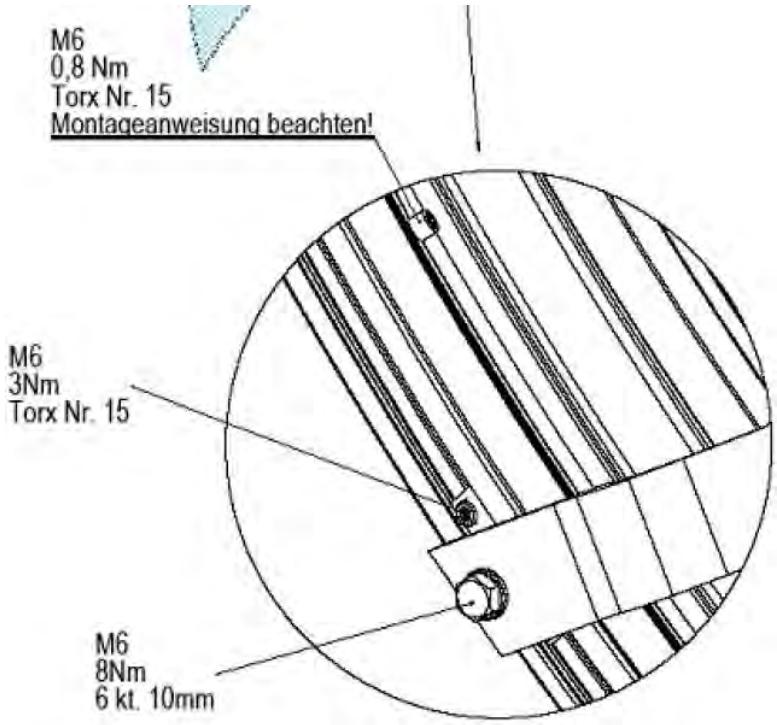

IMPORTANT: Attempting to change the glass position by loosening only one side or by forcing the clamp sideways will result in damaging the hardware and its eventual failure. Loosening the hinge arms requires loosening the attachment screws and setscrews on both hinge arms on the section of glass.

IMPORTANT: It is critical to use the proper size Torx or Hex wrench for the fasteners to avoid stripping the fasteners.

Installation (Cont'd)

Loosen the fasteners only as needed to allow the glass clamp to slip to the desired position.

Reposition the glass and glass clamp assembly as needed and verify its position by carefully closing the glass to check clearances.

Once the glass is in the desired position, retighten the fasteners at the hinge arms with the proper wrench.

Recheck the glass position and double check that the fasteners are properly torqued.

IMPORTANT: It is critical that the hinge arm washers or bushings that fasten the hinge arms to the stationary portion of the upper glass hardware do not have any side pressure on them. Even the slightest side pressure will result in the failure of the hardware. If the retaining clips or hinge arm washers or bushings at each hinge arm have any side pressure it is necessary to repeat the adjustment procedure.

When properly adjusted, the hinge arm washers or bushings will have a slight side-to-side free play.

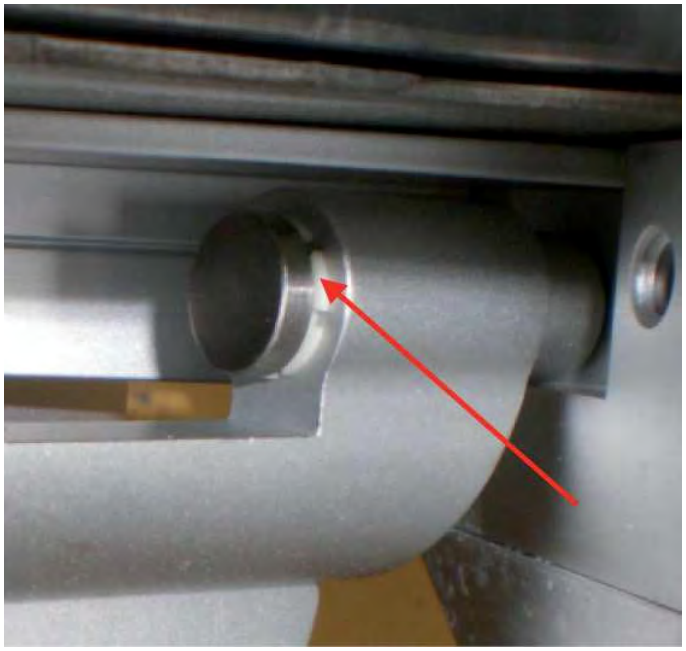

Installation (Cont'd)

Bumper Installation Instructions

Step 1: Make sure the aluminum channel and end caps are installed.

Step 2: Use silicone lubricant to help the bumper slide into the channel.

Step 3: Starting on one end: while inserting the bumper, push it up against the end cap to prevent the bumper from shrinking after installation (when it gets cold).

Step 4: As you insert the bumper into the channel with one hand, pull the bumper toward you with the other to open the inside lips. Slowly apply pressure by rolling the bumper into the track.

5. Plumbing

Waste Outlet and P-TRAP

The waste outlet is located off the center of the case on one side allowing drip piping to be run lengthwise under the fixture.

P-traps must be installed at the base of all refrigerated cases. The 1 ½" P-TRAP and threaded adapter must be installed to prevent air leakage and insect entrance into the fixture.

Installing Condensate Drain

Poorly or improperly installed condensate drains can seriously interfere with the operation of this refrigerator, and result in costly maintenance and product losses. Please follow the recommendations listed below when installing condensate drains to insure a proper installation:

1. Never use pipe for condensate drains smaller than the nominal diameter of the pipe or P-TRAP supplied with the case.
2. When connecting condensate drains, the P-TRAP must be used as part of the condensate drain to prevent air leakage or insect entrance. Store plumbing system floor drains should be at least 14" off the center of the case to allow use of the P-TRAP pipe section. Never use two water seals in series in any one line. Double P-TRAPS in series will cause a lock and prevent draining.
3. Always provide as much down hill slope ("fall") as possible; 1/8" per foot is the preferred minimum. PVC pipe, when used, must be supported to maintain the 1/8" pitch and to prevent warping.
4. Avoid long runs of condensate drains. Long runs make it impossible to provide the "fall" necessary for good drainage.
5. Provide a suitable air break between the flood rim of the floor drain and outlet of condensate drain. 1" is ideal.
6. Prevent condensate drains from freezing:
   a. Do not install condensate drains in contact with non-insulated suction lines. Suction lines should be insulated with a nonabsorbent insulation material such as Armstrong's Armaflex.
   b. Where condensate drains are located in dead air spaces (between refrigerators or between a refrigerator and a wall), provide means to prevent freezing. The water seal should be insulated to prevent condensation.

6. Refrigeration

Refrigerant Type

The standard refrigerant will be R-404A unless otherwise specified on the customer order. Check the serial plate on the case for information.

Piping

The refrigerant line outlets are located under the case. Locate first the electrical box, the outlets are then on the same side of the case, but at the opposite end. Insulate suction lines to prevent condensation drippage.

Refrigeration Lines

Liquid	Suction
3/8" O.D.	5/8" O.D.

NOTE: The standard coil is piped at ½" (suction); however, the store tie-in may vary depending on the number of coils and the draw the case has. Depending on the case setup, the connecting point in the store may be 5/8", 7/8", or 1⅛". Refer to the particular case you are hooking up.

Refrigerant lines should be sized as shown on the refrigeration legend furnished by the store.

Oil traps must be installed at the base of all suction line vertical risers on refrigerated cases.

Pressure drop can rob the system of capacity. To keep the pressure drop to a minimum, keep refrigerant line run as short as possible, using the minimum number of elbows. Where elbows are required, use long radius elbows only.

Control Settings

Maintain these parameters to achieve near constant product temperatures. Product temperature should first be measured in the morning, after having been refrigerated overnight. For all multiplexing, defrost should be time terminated. The number of defrosts per day should never change. The duration of the defrost cycle may be adjusted to meet conditions present at your location.

Access to TEV Valves and Drain Lines

MECHANICAL - Remove product from case. Remove pans. TX valve (mechanical only) and drain are located under the pans within the case.

ELECTRONIC - The electronic expansion valve master and slave cylinder(s) are located within the electrical access panel(s) in the rear of case. Rear panels lift up and out.

NOTE: Duplex receptacles must be detached before removing rear panels.

Refrigeration (Cont'd)

Electronic Expansion Valve (Optional)

A wide variety of electronic expansion valves and case controllers can be utilized. Please refer to EEV and controller Hussmann's information sheet. Sensors for electronic expansion valves will be installed on the coil inlet, coil outlet, and in the discharge air. (Some supermarkets require a 4th sensor in the return air). Case controllers will be located in the electrical raceway or under the case.

Expansion Valve Adjustment

Expansion valves must be adjusted to fully feed the evaporator. Before attempting any adjustments, make sure the evaporator is either clear or very lightly covered with frost, and that the fixture is within 10°F of its expected operating temperature.

ATTENTION INSTALLER

After case has been brought to running temperature verify screws along glass clamp aluminum extrusion are tight.

WARNING!

Do NOT apply thread sealer to ABS P-Trap.

Measuring the Operating Superheat

1. Determine the suction pressure with an accurate pressure gauge at the evaporator outlet.
2. From a refrigerant pressure temperature chart, determine the saturation temperature at the observed suction pressure.
3. Measure the temperature of the suction gas at the thermostatic remote bulb location.
4. Subtract the saturation temperature obtained in step No. 2 from the temperature measured in step No. 3.
5. The difference is superheat.
6. Set the superheat for 5°F - 7°F.

Thermostat Location

Thermostats are located in the electrical section; behind the rear panel, on the right-hand side of the case (facing the back of the case).

Refrigeration (Cont'd)

DELI SERVICE CASE REVISION DATE 11/21/22

HUSSMANN - Q1-FC / FS (CHINO)

Intertek Intertek

DOE 2017 Energy Efficiency Compliant

Hussmann refrigerated merchandisers configured for sale for use in the United States meet or surpass the requirements of the DOE 2017 energy efficiency standards.

Q1-FC Curved Glass - Single-Deck Fish

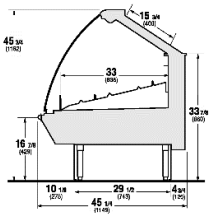

Q1-FS Straight Glass - Single-Deck Fish

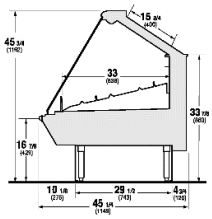

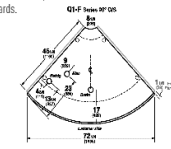

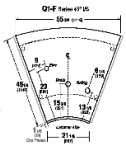

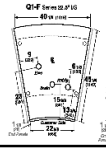

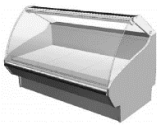

Q1-FC/FS Single-Deck Fish

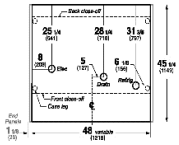

REFRIGERATION DATA:

CASE LENGTHS	CASE USAGE	CAPACITY *** (BTU/HR/FT)		TEMPERATURE (°F)			VELOCITY (FT/MIN)
		RATING CONDITION		EVAPORATOR		DISCHARGE AIR ** (°F)	
		NSF 7	AHRI 1200	NSF 7	AHRI 1200	NSF 7	NSF 7
4',5',6',8',12'	FISH	225	225	24	24	28~30	125~150
22.5° IS	FISH	600	600	24	24	28~30	125~150
22.5° OS	FISH	500	500	24	24	28~30	125~150
45° IS *	FISH	600	600	24	24	28~30	125~150
45° OS *	FISH	500	500	24	24	28~30	125~150
90° OS	FISH	1000	1000	24	24	28~30	125~150

CASE LENGTHS	EST. REFG. CHRG. (LBS)	20°F GLYCOL 6° RISE	
		GPM	PSI
4'	0.5	0.3	0.6
5'	0.7	0.4	1.0
6'	0.7	0.5	1.5
8'	1.0	0.6	0.6
12'	1.4	0.9	1.5
22.5° IS	0.3	0.2	0.1
22.5° OS	0.3	0.2	0.0
45° IS	0.3	0.2	0.0
45° OS	0.2	0.2	0.0
90° OS	0.3	0.3	0.4

*** ADJACENT CASE REQUIRED**
****FRONT DISCHARGE AIR MEASURED INSIDE AIR CURTAIN HONEYCOMB**
*****REFRIGERATION NOTES:**

1) BTU'S INCLUDE ONE ROW OF CANOPY LIGHTS
2) ADD 10 BTU'S PER FOOT/PER SHELF ROW FOR OPTIONAL LED SHELF LIGHTS
3) THE PRINCIPAL COOLING EFFECT IN FISH CASES IS ACCOMPLISHED WITH A TRADITIONAL ICE BED. THE REFRIGERATION PRESERVES THE ICE AND MAINTAINS A COLD PROTECTIVE LAYER OVER THE PRODUCT.
4) AHRI 1200 RATING POINT FOR ENERGY CONSUMPTION COMPARISON ONLY
5) USE DEW POINT FOR HIGH GLIDE REFRIGERANTS. CARE SHOULD BE TAKEN TO USE THE DEW POINT IN P/T TABLES FOR MEASURING AND ADJUSTING SUPERHEAT. ADJUST EVAPORATOR PRESSURE AS NEEDED TO MAINTAIN THE DISCHARGE AIR TEMPERATURE SHOWN.
6) THE PRINCIPAL COOLING EFFECT IN FISH CASES IS ACCOMPLISHED WITH A TRADITIONAL ICE BED. THE REFRIGERATION PRESERVES THE ICE AND MAINTAINS A COLD PROTECTIVE LAYER OVER THE PRODUCT.
7) RATING CONDITION IS NSF TYPE I, 75°F/55% RH

REFRIGERATION DATA CONTINUED:

ELEC. THERMOSTAT / AIR SENSOR SETTINGS			DEFROST TYPE	TIME (MIN)	DEFROST FREQUENCY (#/DAY)	TERM. TEMP (°F) COIL ONLY	DRIP TIME	DEFROST WATER (LBS/DAY/FT)
USAGE	CUT IN (°F)	CUT OUT (°F)						
FISH	31	28	OFF	30	4	41.5	N/A	1.25

END PANEL WIDTH KEY		
# OF END PNLS	END PNL WIDTH (IN.)	TOTAL ADDED LENGTH (IN.)
1	1.125	1.125
2	1.125	2.25

ELECTRICAL DATA:

STANDARD FANS, HEATERS, LED LIGHTS (115 VOLT)

CASE LENGTH	EVAPORATOR FANS					AIRSWEEP FANS		CANOPY LIGHTS LED		LED SHELF LIGHTS		MAX. LED LOAD (W/ ALL OPTIONS)		ANTI-SWEAT HEATERS (ON FAN CIRCUIT)		CONVENIENCE OUTLETS (OPTIONAL)		
	# OF EVAP FANS	BLADE DIA. (IN.)	BLADE PITCH (°)	AMPS	WATTS	AMPS	WATTS	AMPS	WATTS	AMPS	WATTS	AMPS	WATTS	AMPS	WATTS	# OUTLETS	VOLTS	AMPS
4'	1	6.7	10	0.29	24	0.08	9	0.13	15	N/A	N/A	0.13	15	N/A	N/A	1	115	15
5'	1	6.7	10	0.29	24	0.08	9	0.18	21	N/A	N/A	0.18	21	N/A	N/A	1	115	15
6'	2	6.7	10	0.58	48	0.15	18	0.17	20	N/A	N/A	0.17	20	N/A	N/A	1	115	15
8'	2	6.7	10	0.58	48	0.15	18	0.27	31	N/A	N/A	0.27	31	N/A	N/A	1	115	15
12'	4	6.7	10	1.16	96	0.23	26	0.40	46	N/A	N/A	0.40	46	N/A	N/A	2	115	30
22.5° IS	1	6.7	10	0.29	24	0.08	9	0.09	10	N/A	N/A	0.09	10	N/A	N/A	N/A	N/A	N/A
22.5° OS	1	6.7	10	0.29	24	0.08	9	0.09	10	N/A	N/A	0.09	10	N/A	N/A	N/A	N/A	N/A
45° IS	1	6.7	10	0.29	24	0.08	9	0.04	4	N/A	N/A	0.04	4	N/A	N/A	N/A	N/A	N/A
45° OS	1	6.7	10	0.29	24	0.08	9	0.04	4	N/A	N/A	0.04	4	N/A	N/A	N/A	N/A	N/A
90° OS	2	6.7	10	0.58	48	0.15	18	0.13	15	N/A	N/A	0.13	15	N/A	N/A	N/A	N/A	N/A

OPTIONAL HIGH OUTPUT LED LIGHTS (115 VOLT)

CASE LENGTH	CANOPY LIGHTS H.O. LED		SHELF LIGHTS H.O. LED		MAX. H.O. LED LOAD	
	AMPS	WATTS	AMPS	WATTS	AMPS	WATTS
4'	0.23	26	N/A	N/A	0.23	26
5'	0.26	30	N/A	N/A	0.26	30
6'	N/A	N/A	N/A	N/A	N/A	N/A
8'	0.45	52	N/A	N/A	0.45	52
12'	0.68	78	N/A	N/A	0.68	78
22.5° IS	N/A	N/A	N/A	N/A	N/A	N/A
22.5° OS	N/A	N/A	N/A	N/A	N/A	N/A
45° IS	N/A	N/A	N/A	N/A	N/A	N/A
45° OS	N/A	N/A	N/A	N/A	N/A	N/A
90° OS	0.23	26	N/A	N/A	0.23	26

7. Electrical

Wiring Color Code

STANDARD CASE WIRE COLOR CODE
CODIGO DE COLORES DE LOS ALAMBRES PARA LAS VITRINAS ESTANDAR
CODE COULER POUR FILS DE BOITIER NORMALISE

COLOR DESCRIPTION	DESCRIPCION	DESCRIPTION
GROUND	TIERRA MASA	MASSE
ANTI-SWEAT	ANTICONDENSACION	ANTI-SUINTEMENT
LIGHTS	LUCES	ECLAIRAGE
RECEPTACLES	ENCHUFES	PRISE DE COURANT
T-STAT/SOLENOID 230VAC	TERMOSTATO/SOLENOIDE (230VAC)	SOUPAPE A SOLENOID (230 VAC)
T-STAT/SOLENOID 115VAC	TERMOSTATO/SOLENOIDE (115VAC)	SOUPAPE A SOLENOID (115 VAC)
T-STAT/SOLENOID 24VAC	TERMOSTATO/SOLENOIDE (24VAC)	SOUPAPE A SOLENOID (24 VAC)
FAN MOTORS	VENTILADORES	VENTILATEUR
BLUE CONDENSING UNIT	UNIDAD DE CONDENSACION	UNITE DE CONDENSATION

USE COPPER CONDUCTORS ONLY
UTILISEZ LES CONDUCTEURS DE CUIVRE SEULEMENT
UTILICE LOS CONDUCTORES DE COBRE SOLAMENTE
430-01-0338 R101003

CASE MUST BE GROUNDED

NOTE: Refer to label affixed to case to determine the actual configuration as checked in the "TYPE INSTALLED" boxes.

Electrical Circuit Identification

Standard lighting for all models will be full length fluorescent lamps located within the case at the top. The switch controlling the lights, the plug provided for digital scale, and the thermometer are located at the rear of the case mullion.

The receptacle that is provided on the exterior back of these models is intended for computerized scales with a five amp maximum load, not for large motors or other high wattage appliances. It should be wired to a dedicated circuit.

DANGER

BEFORE SERVICING ALWAYS DISCONNECT ELECTRICAL POWER AT THE MAIN DISCONNECT WHEN SERVICING OR REPLACING ANY ELECTRICAL COMPONENT.
This includes (but not limited to) Fans, Heaters Thermostats, and Lights.

Field Wiring and Serial Plate Amperage

Field Wiring must be sized for component amperes printed on the serial plate. Actual ampere draw may be less than specified. Field wiring from the refrigeration control panel to the merchandisers is required for refrigeration thermostats. Case amperes are listed on the wiring diagram, but always check the serial plate.

LED Driver Location

Ballasts are located within the access panel that runs the length of the rear of the case.

ASHRAE Color Code

NOTE: All other manufacturers have no standard sensor codes.

Case Control Systems SENSOR COLOR			
Manufacturer ® >		EIL	CPC
Location			
Coil Inlet	Color	Blue	Blue
	Part#	225-01-1755	225-01-3255
Coil Outlet	Color	Red	Red
	Part#	225-01-1757	225-01-3123
Discharge Air	Color	Green	Green
	Part#	225-01-1756	225-01-3260
Return Air	Color	Purple	Green
	Part#	225-01-1758	225-01-3260
Defrost Term.	Color	White	Orange
	Part#	225-01-0650	225-01-3254
Liquid Line	Color	White	Blue
	Part#	225-01-0650	225-01-3255

8. Finishing Touches

Installing Splashguard

After merchandisers have been leveled and joined, and all drip piping, electrical and refrigeration work has been completed, install the splashguards. Splashguards may be sealed to the floor using a vinyl cove base trim. The size of trim needed will depend on how much the floor is out of level.

NOTE: The splashguard must be removable to allow access to components behind it.

1. Remove all dirt, wax, debris, etc. from the area of the splashguard to ensure a secure adhesion.
2. Apply a good contact cement to the trim, allowing a proper dry time.
3. Install trim to the splashguard so that it is flush with the floor.

9. User Information

Stocking

Improper temperature and lighting will cause serious product loss. Discoloration, dehydration and spoilage can be controlled with proper use of the equipment and handling of product. Product temperature should always be maintained at a constant and proper temperature. This means that from the time the product is received, through storage, preparation and display, the temperature of the product must be controlled to maximize life of the product. Hussmann cases were not designed to “heat up” or “cool down” product - but rather to maintain an item’s proper temperature for maximum shelf life. To achieve the protection required always:

1. Minimize processing time to avoid damaging temperature rise to the product. Product should be at proper temperature.
2. Keep the air in and around the case area free of foreign gasses and fumes or food will rapidly deteriorate.
3. Maintain the display merchandisers temperature controls as outlined in the refrigerator section of this manual.
4. Do not place any product into these refrigerators until all controls have been adjusted and they are operating at the proper temperature. Allow merchandiser to operate a minimum of six (6) hours before stocking with any product.
5. When stocking, never allow the product to extend beyond the recommended load limit. Air discharge and return air flow must be unobstructed at all times to provide proper refrigeration.
6. There are vents located at the base of the front of the glass, just above the front rail. These vents supply a continuous, gentle flow of air across the front glass which inhibits condensation. Do not place any signs or other restrictive objects on the front of the refrigerator that will block these vents.
7. Keep the service doors closed (when applicable). Refrigeration performance will be seriously affected if left open for a prolonged period of time.
8. Avoid the use of supplemental flood or spot lighting. Display light intensity has been designed for maximum visibility and product life at the factory. The use of higher output fluorescent lamps (H.O. and V.H.O.), will shorten the shelf life of the product.
9. In the Deli, Meat and Fish cases, completely cover the product each night with a clean damp cloth or butcher paper (never use plastic, as it does not allow for proper circulation). Make sure the cloth or paper is in direct contact with the product.
10. Turn and rotate the meat fairly often. The blood which gives the pink color works its way downward with time.
11. Cold coils remove heat and moisture from the case and deposit this as frost onto the coil. Thus, a defrost is required. Our humidity system induces moisture into the case and helps slow down the dehydration process. The only other moisture within the case is that in the product itself. A single level of meat will dry out faster than a fully loaded case of 3-4 levels of meat.

Important Steps

1. Do not set temperature too cold, as this causes product dehydration. **Product Temperature: 33°-35°F!** Set thermostat to cut in at 28°F discharge air. Meat holding box: 32°F. Meat prep room: 55°F. Meat bloom box: 36°F. Process the meat to enter case at 40°F or below. Product deterioration is very rapid above 40°F.
2. Temperature control should be by means of a T-STAT and Suction Stop Solenoid at each case. Do not use EPR valves, Liquid line solenoids or electronic control devices of any kind, as these allow temperature swings causing dehydration and excessive energy consumption.
3. Product should be worked and rotated on a regular basis, not to exceed a 4 hour period.

User Information (Cont'd)

4. At night, turn off case lights and cover the product with a damp (not wet) cloth similar to cheese cloth (etc.). This should be washed out in the morning and kept in a walk-in box during the day - so that it is cool and moist when covering the product.
5. Discharge air temperature should be approximately 26°F, with between 150-200 FPM air velocity. Do not display product directly within the air discharge.
6. Clean humidity system a minimum of every 90 days for proper system operation.

Case Cleaning

Long life and satisfactory performance of any equipment are dependent upon the care given to it. To insure long life, proper sanitation and minimum maintenance costs, the refrigerator should be thoroughly cleaned frequently. SHUT OFF FAN DURING CLEANING PROCESS. It can be unplugged within the case, or shut off entire case at the source. The interior bottom may be cleaned with any domestic soap or detergent based cleaners. Sanitizing solutions will not harm the interior bottom, however, these solutions should always be used according to the Hussmann's directions. It is essential to establish and regulate cleaning procedures. This will minimize bacteria causing discoloration which leads to degraded product appearance and significantly shortening product shelf life.

Soap and hot water are not enough to kill this bacteria. A sanitizing solution must be included with each cleaning process to eliminate this bacteria.

1. Scrub thoroughly, cleaning all surfaces, with soap and hot water.
2. Rinse with hot water, but do not flood.
3. Apply the sanitizing solution according to Hussmann's directions.
4. Rinse thoroughly.
5. Dry completely before resuming operation.

Cleaning Glass and Mirrors

Only use a soft cloth and mild glass cleaner for cleaning any glass or mirrored components. Be sure to rinse and/or dry completely.

Never use hot water on cold glass surfaces! It may shatter and cause serious injury! Allow glass surfaces to warm first.

CAUTION

CLEANING PRECAUTIONS

When cleaning:

- **Do not use high pressure water hoses**
- **Do not introduce water faster then waste outlet can drain**
- **NEVER INTRODUCE WATER ON SELF CONTAINED UNIT WITH AN EVPORATOR PAN**
- **NEVER USE A CLEANING OR SANITIZING SOLUTION THAT HAS AN OIL BASE (these will dissolve the butyl sealants) or an AMMONA BASE (this will corrode the copper components of the case)**
- **TO PRESERVE THE ATTRACTIVE FINISH:**
- **DO USE WATER AND A MILD DETERGENT FOR THE EXTERIOR ONLY**
- **DO NOT USE A CHLORINATED CLEANER ON ANY SURFACE**
- **DO NOT USE ABRASIVES OR STEEL WOOL SCOURING PADS (these will mar the finish)**

Non-Glare Glass

The high optical clarity of this glass is possible due to special coatings on the glass surface itself. To preserve this coating and the optical clarity, keep the glass clean.

Water is the only solution recommended for use in cleaning non-glare glass. The damage to the glass from improper, caustic solutions is irreparable.

In addition to cleaning the glass with the recommended product, there are precautions that should be taken when working and cleaning the inside of the case.

- When cleaning the inside of the cases, we recommend that the glass be fully opened and covered to prevent solutions from splashing onto the glass and ruining the coating on the inside.

Plexiglass and Acrylic Care

Improper cleaning not only accelerates the cleaning cycle but also degrades the quality of this surface. Normal daily buffing motions can generated static cling attracting dust to the surface. Incorrect cleaning agents or cleaning cloths can cause micro scratching of the surface, causing the plastic to haze over time.

Cleaning

Hussmann recommends using a clean damp chamois, or a paper towel marked as "dust and abrasive free" with **210®** **Plastic Cleaner and Polish** available by calling Sumner Labs at **1-800-542-8656**. Hard, rough cloths or paper towels will scratch the acrylic and should not be used.

Antistatic Coatings

The **210®** has proven to be very effective in not only cleaning and polishing the Plexiglass surface, but also providing antistatic and anti-fog capabilities. This product also seals pores and provides a protective coating.

10. Maintenance

IMPORTANT INFORMATION

Please read these instructions completely before beginning case installation

DANGER

BEFORE SERVICING ALWAYS DISCONNECT ELECTRICAL POWER AT THE MAIN DISCONNECT WHEN SERVICING OR REPLACING ANY ELECTRICAL COMPONENT.
This includes (but not limited to) Fans, Heater Thermostats, and Lights

Evaporator Fans

The evaporator fans are located at the center front of these merchandisers directly beneath the display pans. *Should fans or blades need servicing, always replace fan blades with the raised embossed side of the blade TOWARD THE MOTOR.*

Coils

The copper coils used in Hussmann merchandisers may be repaired in the field. Materials are available from local refrigeration wholesalers.

Hussmann recommends using #15 Sil-Fos for repairs.

Tips and Troubleshooting

Before calling for service, check the following:

1. Check electrical power supply to the equipment for connection.
2. Check fixture loading. Overstocking case will affect its proper operation.
3. If frost is collecting on fixture and/or product, check that Humidity Control is working properly, and that no outside doors or windows are open - allowing moisture to enter store.

Glass Replacement and Adjustment Instructions

In order to replace or adjust the glass, the glass must be placed in the raised position. The underside of the clamp is exposed, revealing the tightening screws. By turning these screws counterclockwise 1/4 turn each, the glass will be loosened for either removal or adjustment.

Note: Do not overtighten the screws since damage may occur.

Maintenance (Cont'd)

Stainless Steel Cleaning and Care

There are three basic things, which can break down your stainless steel's passivity layer and allow corrosion.

1. **Mechanical Abrasion**
   Mechanical Abrasion means those things that will scratch the steels surface. Steel Pads, wire Brushes, and Scrapers are prime examples.
2. **Water**
   Water comes out of our tap in varying degrees of hardness. Depending on what part of the country you live in, you may have hard or soft water. Hard water may leave spots. Also, when heated, hard water leaves deposits behind that if left to sit, will break down the passive layer and rust your stainless steel. Other deposits from food preparation and service must be properly removed.
3. **Chlorides**
   Chlorides are found nearly everywhere. They are in water, food and table salt. One of the worst perpetrators of chlorides can come from household and industrial cleaners.

Don't Despair! Here are a few steps that can help prevent stainless steel rust.

1. **Use the Proper Tools**
   When cleaning your stainless steel products, take care to use non-abrasive tools. Soft Clothes and plastic scouring pads will NOT harm the steel's passive layer. Stainless steel pads can also be used but th e scrubbing motion must be in the same direction of the manufacturer's polishing marks.
2. **Clean With the Polish Lines**
   Some stainless steels come with visible polishing lines or "grain". When visible lines are present, you should ALWAYS scrub in a motion that is parallel to them. When the grain cannot be seen, play it safe and use a soft cloth or plastic scouring pad.
3. **Use Alkaline, Alkaline Chlorinated or Non-chloride Containing Cleaners**
   While many traditional cleaners are loaded with chlorides, the industry is providing an ever increasing choice of non-chloride cleaners. If you are not sure of your cleaner's chloride content contact your cleaner supplier. If they tell you that your present cleaner contains chlorides, ask for an alternative. Also, avoid cleaners containing quaternary salts as they also can attack stainless steel & cause pitting and rusting.
4. **Treat your Water**
   Though this is not always practical, softening hard water can do much to reduce deposits. There are certain filters that can be installed to remove distasteful and corrosive elements. Salts in a properly maintained water softener are your friends. If you are not sure of the proper water treatment, call a treatment specialist.
5. **Keep your Food Equipment Clean**
   Use alkaline, alkaline chlorinated or non-chlorinated cleaners at recommended strength. Clean frequently to avoid build-up of hard, stubborn stains. If you boil water in your stainless steel equipment, remember the single most likely cause of damage is chlorides in the water. Heating cleaners that contain chlorides has a similar effect.
6. **RINSE, RINSE, RINSE**
   If chlorinated cleaners are used you must rinse, rinse, rinse and wipe dry immediately. The sooner you wipe off standing water, especially when sit contains cleaning agents, the better. After wiping the equipment down, allow it to air dry for the oxygen helps maintain the stainless steel's passivity film.
7. **Never Use Hydrochloric Acid (Muriatic Acid) on Stainless Steel**
8. **Regularly Restore/Passivate Stainless Steel**

11. Electrical Wiring Diagrams

Q1-FC/FS-4R	4'	3014313
Q1-FC/FS-5R	5'	3014312
Q1-FC/FS-6R	6'	3014186
Q1-FC/FS-8R	8'	3014310
Q1-FC/FS-10R	10'	3014309
Q1-FC/FS-12R	12'	3014306

CIRCUIT #1
LOADING

	120V	
L1	0.8	

REVISION HISTORY						
REV	ECN	DATE	REVISION DESCRIPTION	REV BY	CHKD BY	APPR BY
A	ECN-CAP-0003238	2016/09/01	RELEASED TO PRODUCTION	CB	CB	CB
B	ECN-CAP-0008201	2017/07/12	REVISED EVAP FAN MOTOR	CB	CB	CB

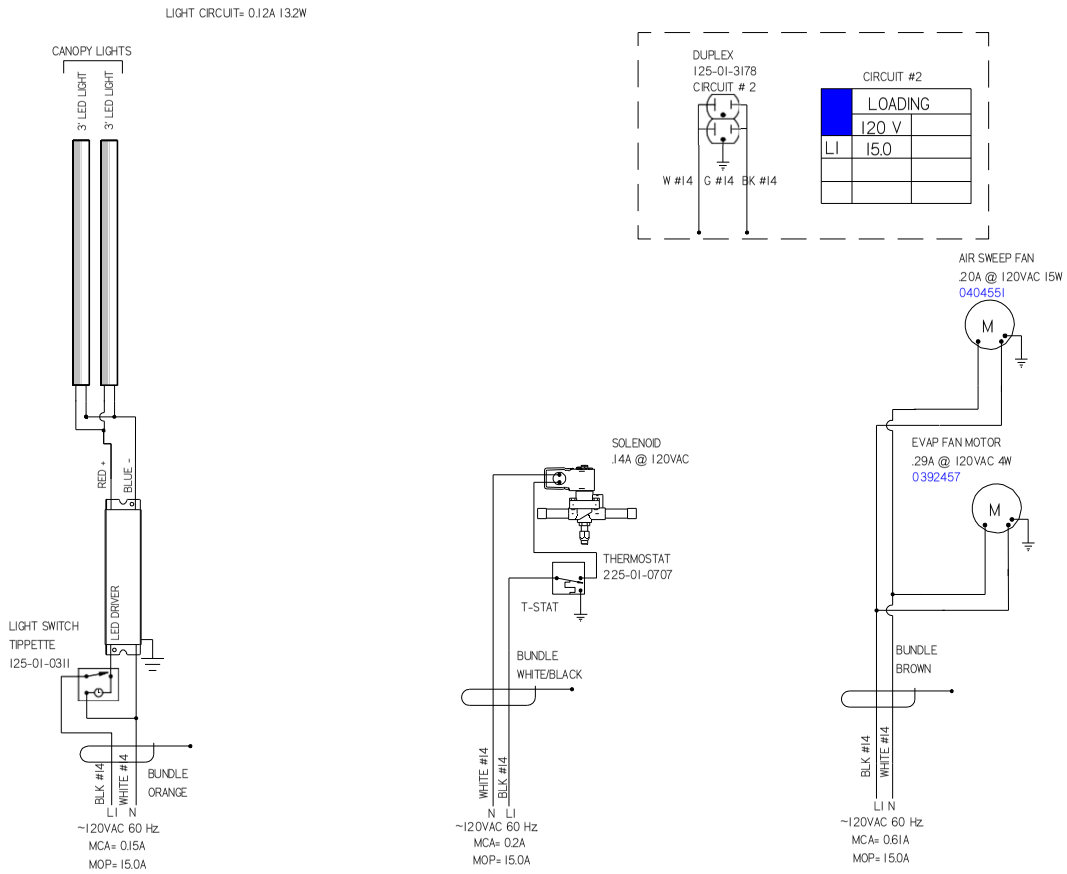

NOTES:
CASE MUST BE GROUNDED
WHEN PASSING WIRES THROUGH METAL HOLES A GROMMET MUST BE USED

MATERIAL - N/A	
DATE DRAWN - 9-1-16	
DRAWN BY -CRAIG BOOREY	ECN-CAP-0003238
REVIEWED BY -CRAIG BOOREY	REF -
APPROVED BY - CRAIG BOOREY	SHEET 1 OF 1
UNLESS OTHERWISE SPECIFIED DIMENSIONS ARE IN INCHES.	
TOLERANCES ARE: DECIMALS .XX ±.03, .XXX ±.010 ANGLES ± 2°	THIRD ANGLE PROJECTION

HUSSMANN

DIAGRAM-QT-FC/FS-4
R

3014313 B

HUSSMANN_GDF_11 SHEET SIZE D

CIRCUIT #1
LOADING

	120V	
L1	0.8	

REVISION HISTORY						
REV	ECN	DATE	REVISION DESCRIPTION	REV BY	CHKD BY	APPR BY
A	ECN-CAP-0003238	2016/09/01	RELEASED TO PRODUCTION	CB	CB	CB
B	ECN-CAP-0008201	2017/07/12	REVISED EVAP FAN MOTOR	CB	CB	CB

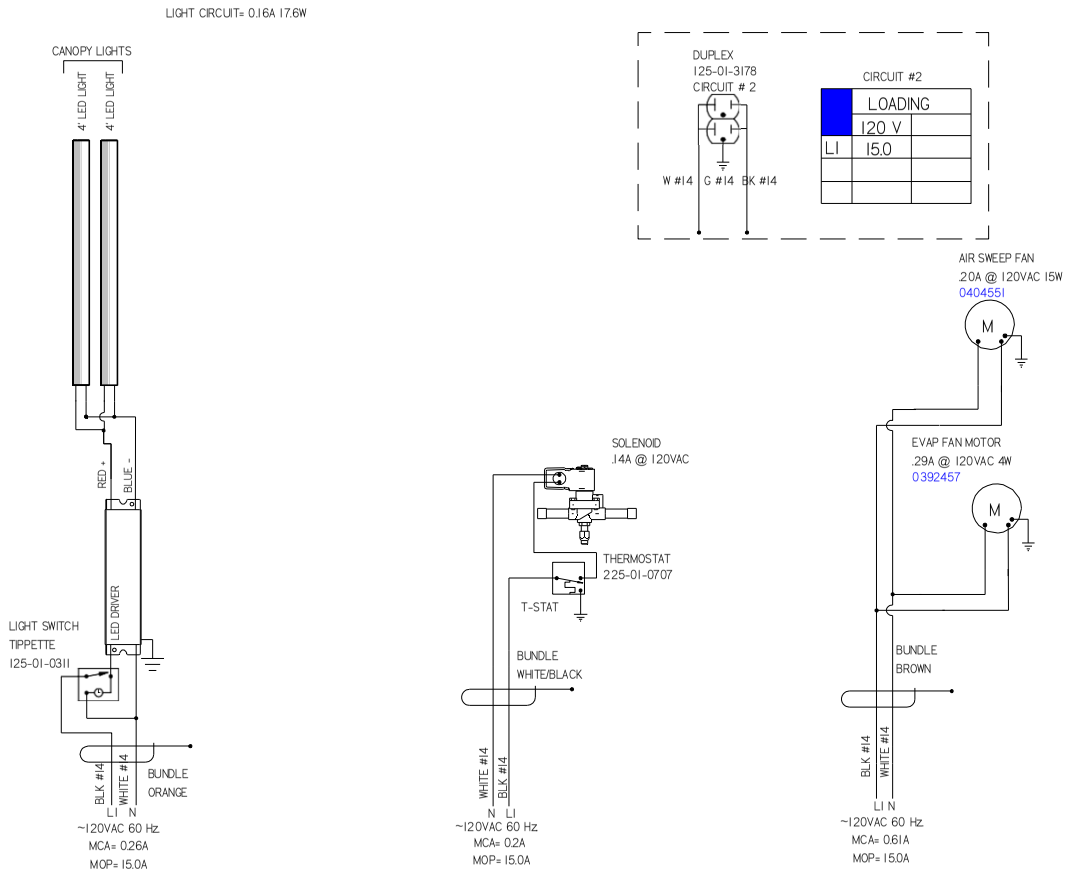

NOTES:
CASE MUST BE GROUNDED
WHEN PASSING WIRES THROUGH METAL HOLES A GROMMET MUST BE USED

MATERIAL - N/A	
DATE DRAWN - 9-1-16	
DRAWN BY -CRAIG BOOREY	ECN-CAP-0003238
REVIEWED BY -CRAIG BOOREY	REF -
APPROVED BY - CRAIG BOOREY	SHEET 1 OF 1

UNLESS OTHERWISE SPECIFIED DIMENSIONS ARE IN INCHES.
TOLERANCES ARE:
DECIMALS .XX ±.03, .XXX ±.010
ANGLES ± 2°
THIRD ANGLE PROJECTION

HUSSMANN
DIAGRAM-QT-FC/FS-5 R
3014312 B

HUSSMANN.DCF_L1 SHEET SIZE D

CIRCUIT
#1

	ADING	
	120V	
L1	1.1	

REVISION HISTORY						
REV	ECN	DATE	REVISION DESCRIPTION	REV BY	CHKD BY	APPR BY
A	ECN-CAP-0003238	2016/08/30	RELEASED TO PRODUCTION	CB	CB	CB
B	ECN-CAP-0008201	2017/07/12	REVISED EVAP FAN MOTORS	CB	CB	CB
C	ECN-CAP-0011919	2018/04/10	REVISED MODEL NUMBER	CB	CB	CB
D	ECN-COD-0014513	2021/12/06	NEW LIGHTS	CB	CB	CB

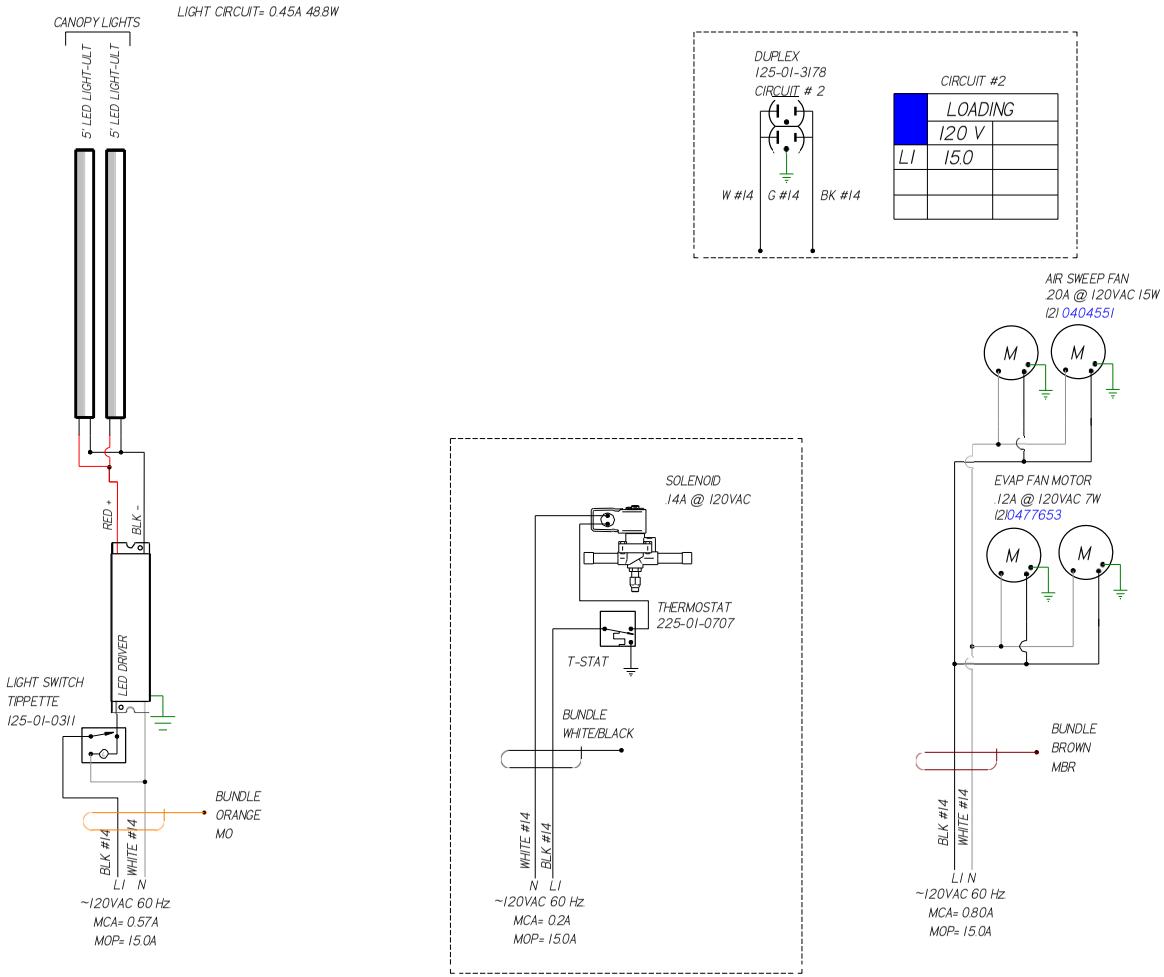

NOTES:
CASE MUST BE GROUNDED
WHEN PASSING WIRES THROUGH METAL HOLES A GROMMET MUST BE USED

MATERIAL - N/A	
DATE DRAWN - 8-30-16	
DRAWN BY -CRAIG BOOREY	ECN-CAP-0003238
REVIEWED BY -CRAIG BOOREY	REF -
APPROVED BY - CRAIG BOOREY	SHEET 1 OF 1
UNLESS OTHERWISE SPECIFIED DIMENSIONS ARE IN INCHES.	
TOLERANCES ARE: DECIMALS .XX ±.03, .XXX ±.010 ANGLES ± 2°	THIRD ANGLE PROJECTION

HUSSMANN

DIAGRAM-QT-FC/FS-6 R

3014186 D

HUSSMANN_GDF_1.1 SHEET SIZE D

CIRCUIT #1
LOADING

	120V	
L1	1.4	

REVISION HISTORY						
REV	ECN	DATE	REVISION DESCRIPTION	REV BY	CHKD BY	APPR BY
A	ECN-CAP-0003238	2016/09/01	RELEASED TO PRODUCTION	CB	CB	CB
A	ECN-CAP-0008201	2017/07/12	REVISED EVAP FAN MOTORS	CB	CB	CB

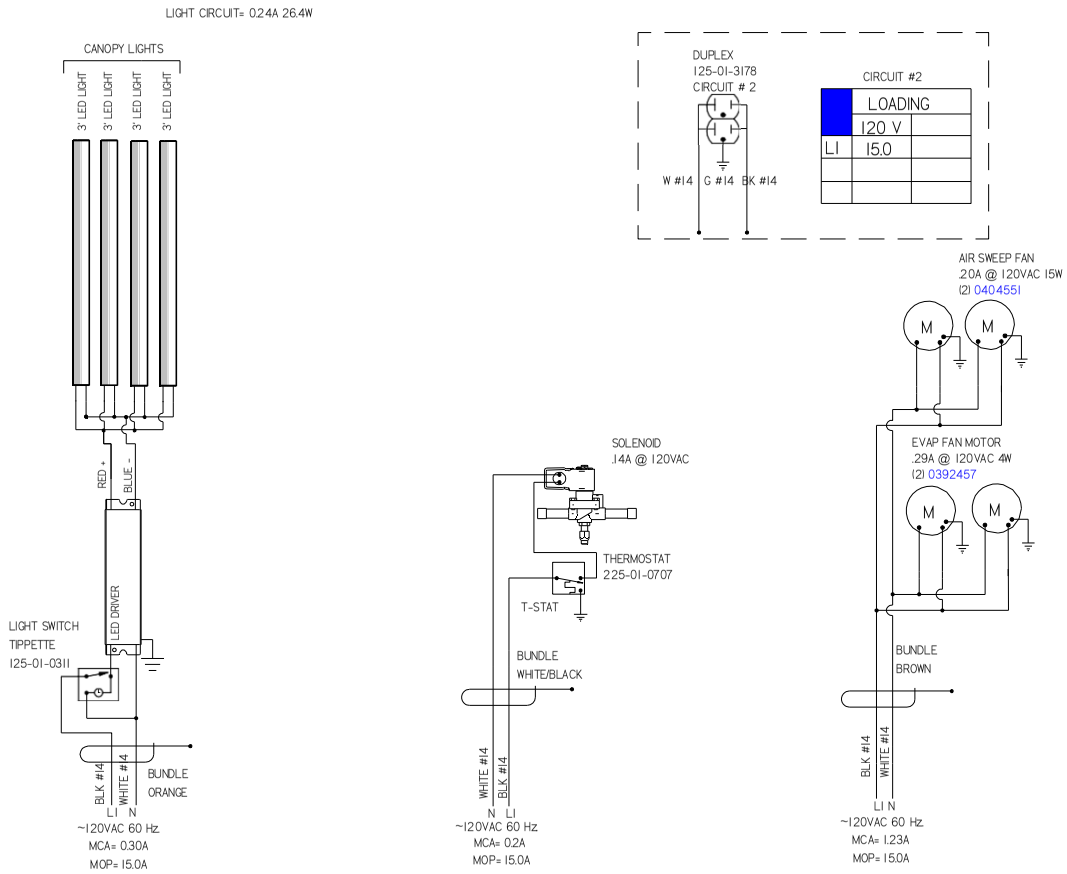

NOTES:
CASE MUST BE GROUNDED
WHEN PASSING WIRES THROUGH METAL HOLES A GROMMET MUST BE USED

MATERIAL - N/A	
DATE DRAWN - 9-1-16	
DRAWN BY -CRAIG BOOREY	ECN-CAP-0003238
REVIEWED BY -CRAIG BOOREY	REF -
APPROVED BY - CRAIG BOOREY	SHEET 1 OF 1

UNLESS OTHERWISE SPECIFIED DIMENSIONS ARE IN INCHES.
TOLERANCES ARE:
DECIMALS .XX ±.03, .XXX ±.010
ANGLES ± 2°
THIRD ANGLE PROJECTION

HUSSMANN
DIAGRAM-QT-FC/FS-8 R
3014310 B

HUSSMANN.DCF_L1 SHEET SIZE D

CIRCUIT #1
LOADING

	120V	
L1	1.7	

REVISION HISTORY						
REV	ECN	DATE	REVISION DESCRIPTION	REV BY	CHKD BY	APPR BY
A	ECN-CAP-0003238	2016/09/01	RELEASED TO PRODUCTION	CB	CB	CB
B	ECN-CAP-0008201	2017/07/12	REVISED EVAP FAN MOTORS	CB	CB	CB

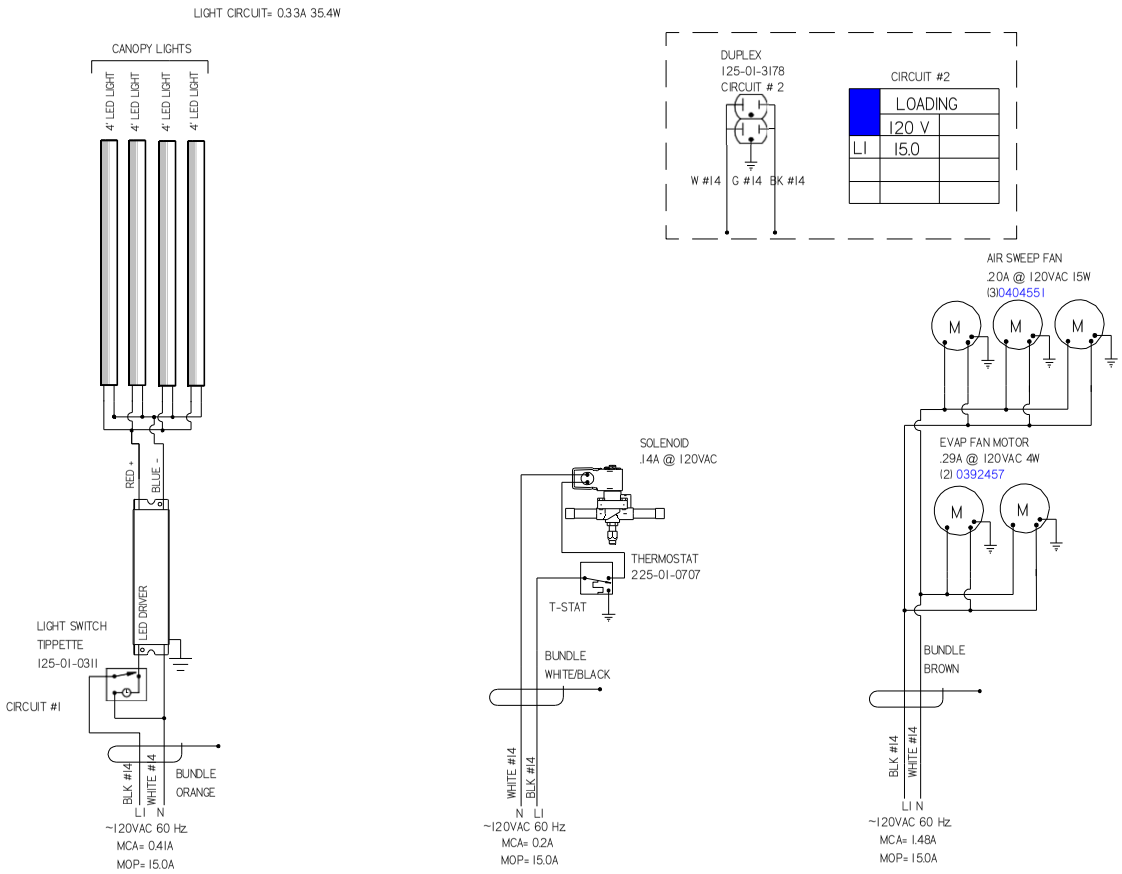

NOTES:
CASE MUST BE GROUNDED
WHEN PASSING WIRES THROUGH METAL HOLES A GROMMET MUST BE USED

MATERIAL - N/A	
DATE DRAWN - 9-1-16	
DRAWN BY -CRAIG BOOREY	ECN-CAP-0003238
REVIEWED BY -CRAIG BOOREY	REF -
APPROVED BY - CRAIG BOOREY	SHEET 1 OF 1
UNLESS OTHERWISE SPECIFIED DIMENSIONS ARE IN INCHES.	
TOLERANCES ARE: DECIMALS .XX ±.03, .XXX ±.010 ANGLES ± 2°	THIRD ANGLE PROJECTION

HUSSMANN

DIAGRAM-QT-FC/FS-1 OR

3014309 B

HUSSMANN_GDF_11 SHEET SIZE D

CIRCUIT #1
LOADING

	120V	
LI	2.3	

REVISION HISTORY						
REV	ECN	DATE	REVISION DESCRIPTION	REV BY	CHKD BY	APPR BY
A	ECN-CAP-0003238	2016/09/01	RELEASED TO PRODUCTION	CB	CB	CB
B	ECN-CAP-0008201	2017/07/12	REVISED EVAP FAN MOTOR	CB	CB	CB

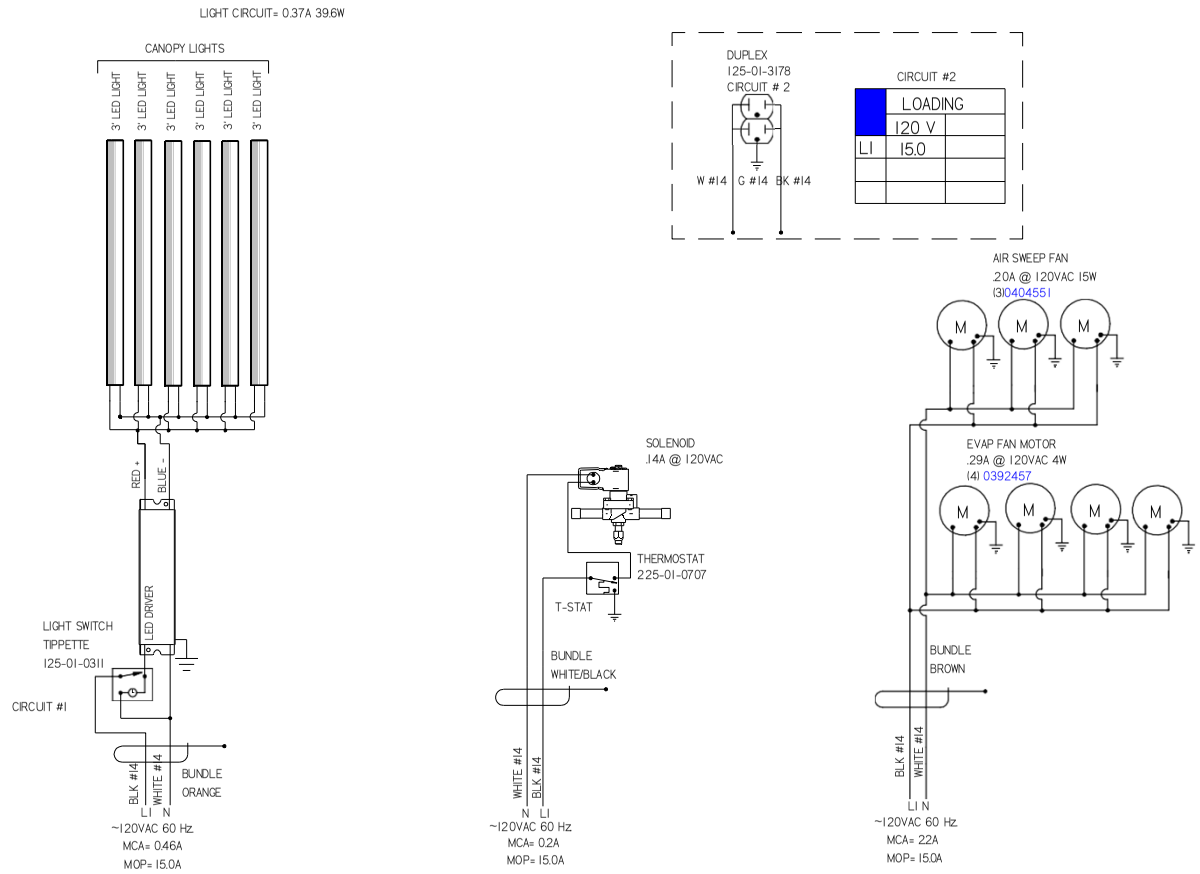

NOTES:
CASE MUST BE GROUNDED
WHEN PASSING WIRES THROUGH METAL HOLES A GROMMET MUST BE USED

MATERIAL - N/A	
DATE DRAWN - 9-1-16	
DRAWN BY -CRAIG BOOREY	ECN-CAP-0003238
REVIEWED BY -CRAIG BOOREY	REF -
APPROVED BY - CRAIG BOOREY	SHEET 1 OF 1
UNLESS OTHERWISE SPECIFIED DIMENSIONS ARE IN INCHES. TOLERANCES ARE: DECIMALS .XX ±.03, .XXX ±.010 ANGLES ± 2°	THIRD ANGLE PROJECTION

HUSSMANN

DIAGRAM-QT-FC/FS-12R

3014306 B

HUSSMANN.DCF_LI SHEET SIZE D

13. Troubleshooting Guide

Problem	Possible Cause	Possible Solution
Case temperature is too warm.	Ambient conditions may be affecting the case operation.	Check case position in store. Is the case located near an open door, window, electric fan or air conditioning vent that may cause air currents? Case must be located minimum 15 Ft away from doors or windows. Cases are designed to operate at 55% Relative humidity and a temperature of 75°F.
	Discharge air temp is out of spec.	Check evaporator fan operation. Check electrical connections and input voltage.
		Fans are installed backwards. Check airflow direction.
		Fan blades are installed incorrectly. Make sure fan blades have correct pitch and are per specification.
		Check to see that fan plenum is installed correctly. It should not have any gaps.
		Check suction pressure and insure that it meets factory specifications.
	Case is in defrost.	Check defrost settings. See Technical Specifications section.
	Product load may be over its limits blocking airflow.	Redistribute product so it does not exceed load level. There is a sticker on the inside of the case indicating what the maximum load line is.
	Coil is freezing over.	Return air is blocked, make sure debris is not blocking the intake section.
		Coil close-offs are not installed. Inspect coil to make sure these parts are on the case.
	Condensing coil or evaporator coil is clogged or dirty.	Clean coil.
Case temperature is too cold.	The t-stat temp is set too low.	Check settings. See Technical Specifications section.
	Ambient conditions may be affecting the case operation.	Check case position in store. Is the case located near an open door, window, electric fan or air conditioning vent that may cause air currents? Case must be located minimum 15 Ft away from doors or windows. Cases are designed to operate at 55% Relative humidity and a temperature of 75°F.
Condensation on glass.	Ambient conditions may be affecting the case operation.	Check case position in store. Is the case located near an open door, window, electric fan or air conditioning vent that may cause air currents? Case must be located minimum 15 Ft away from doors or windows. Cases are designed to operate at 55% Relative humidity and a temperature of 75°F.
	Inadequate air circulation.	Check if air sweep fans are functioning, check electrical connections.
	There is not enough heat provided in the airflow.	Check if air sweep heater is functioning, check electrical connections.
	There are glass gaps on the side of the case.	See glass adjustment section.
	Glass is not completely shut.	Close glass correctly.

Troubleshooting Guide (Cont'd)

Problem	Possible Cause	Possible Solution
Water has pooled under case.	Case drain is clogged.	Clear drain.
	PVC drains under case may have a leak.	Repair as needed.
	Case tub has unsealed opening.	Seal as needed.
	If the case is in a line-up, case to case joint is missing or unsealed.	Install case to case joint and seal as needed.
	Evaporator pan is overflowing (if applicable).	Check electrical connection to evaporator pan. Check float assembly, it should move freely up and down the support stem. Clear any debris.
Case is not draining properly.	Case is not level.	Level the case.
	Drain screen is plugged.	Clean drain screen and remove any debris.
	Drain or P-trap is clogged.	Clear any debris.
Frost or ice on evaporator coil.	Evaporator fans are not functioning.	Check electrical connections.
	Defrost clock is not functioning.	Case should be serviced by a qualified service technician.
	Coil is freezing over.	Return air is blocked, make sure debris is not blocking the intake section.
		Coil close-offs are not installed. Inspect coil to make sure these parts are on the case.
Large gap is visible on bottom of front glass or glass can't be opened because it is too low.	Glass Height adjusters need to be adjusted.	See Glass Adjustment section.
Large gaps are visible in between glass panels or glass rubs against end panel.	Glass/glass clamp assembly needs to be adjusted.	See Glass Adjustment section.
Front glass does not stay open and falls closed.	Glass shock/piston may need to be replaced.	Case should be serviced by a qualified service technician.
Lights do not come on.	LED Driver/light socket wiring.	Check electrical connections. See Electrical Section and check wiring diagram.
	LED Driver needs to be replaced.	Case should be serviced by a qualified service technician. See Electrical Section.
	Lamp socket needs to be replaced.	Case should be serviced by a qualified service technician.
	Lamp needs to be replaced.	See Maintenance Section.
	Light Switch needs to replaced.	Case should be serviced by a qualified service technician.

For further technical information, please log on to http://www.hussmann.com/products/Q1-FC/FS.htm

This warning does not mean that Hussmann products will cause cancer or reproductive harm, or is in violation of any product-safety standards or requirements. As clarified by the California State government, Proposition 65 can be considered more of a ‘right to know’ law than a pure product safety law. When used as designed, Hussmann believes that our products are not harmful. We provide the Proposition 65 warning to stay in compliance with California State law. It is your responsibility to provide accurate Proposition 65 warning labels to your customers when necessary. For more information on Proposition 65, please visit the California State government website.

Service Record

Last service date:	By:

HUSSMANN®/Chino
Additional copies of this publication may be obtained by contacting:

Hussmann® Chino
13770 Ramona Avenue • Chino, California 91710
(909) 628-8942 FAX
(909) 590-4910
(800) 395-9229

The *MODEL NAME* and *SERIAL NUMBER* is required in order to provide you with the correct parts and information for your particular unit.

They can be found on a small metal plate on the unit. Please note them below for future reference.

MODEL:

SERIAL NUMBER: