HUSSMANN® Excel

M3X-E

Technical Data Sheet

P/N 0463863_M

NSF® Certified

April 2017

DOE 2017
Energy Efficiency Compliant

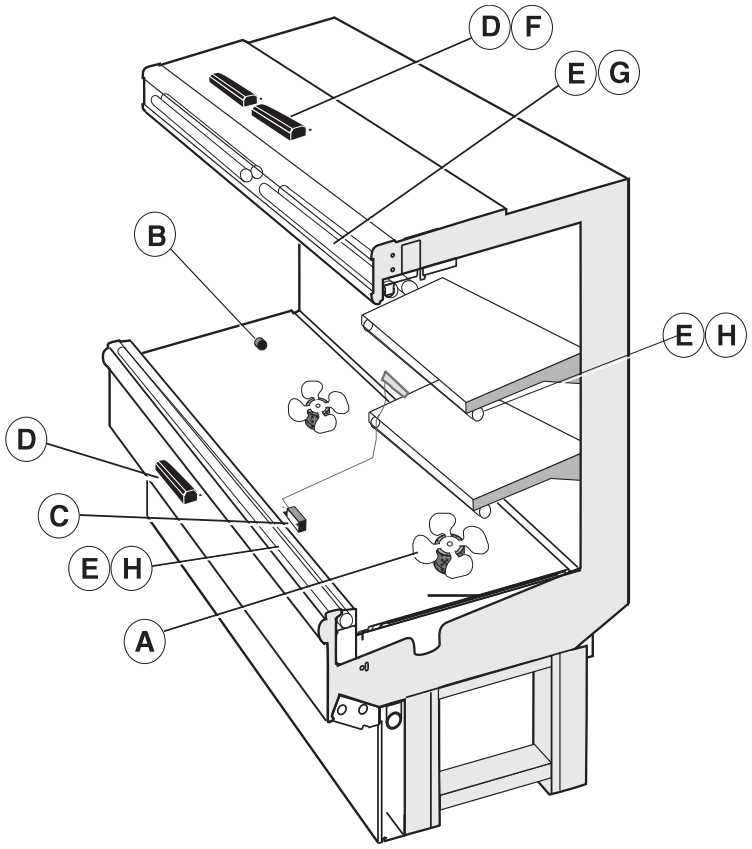

Scan QR code to access product information on your mobile device.

We reserve the right to change or revise specifications and product design in connection with any feature of our products. Such changes do not entitle the buyer to corresponding changes, improvements, additions or replacements for equipment previously sold or shipped.

Item	Part #	Description	Wiring Item #
FAN ASSEMBLIES			
8 Ft & 12 Ft			
A.		**12W Standard Energy Efficient** Fan Assembly	(1)
	0477655	Fan Motor, Evaporator (MO.4410546)	
	0461805	Fan Blade (FB.4780446)	
THERMOSTATS			
B.	0411744	Standard Non-adjustable Defrost Thermostat (CT.0411744)	(2)
C.		Optional Adjustable Refrigeration Thermostat	(3)

Item	Part #	Description	Wiring Item #
LAMPS AND BALLASTS			
D.		Ballast, Electronic	(4)
	0480130	2 lamps (BA.4481676)	
	0480131	3 lamps (BA.4481654)	
	0480132	4 lamps (BA.4481677)	
E.		Fluorescent Lamp *Replace with like fixtures*	(5)
LED FIXTURES AND POWER SUPPLY			
F.	0501213	Power Supply (EP.4481861)	(6)
G.		LED Canopy Fixture *Replace with like fixtures*	(7)
H.		LED Shelf Fixture *Replace with like fixtures*	(8)

Data sheet-Excel-M3X-E

Revision M: April 2017. Updated LED energy values. Other changes marked with a bar, circle or underline.

©2017 HUSSMANN CORPORATION • BRIDGETON, MO 63044-2483 U.S.A.
U.S. & CANADA 1-800-922-1919 • MEXICO 1-800-890-2900 • WWW.HUSSMANN.COM

Spanish P/N 0532345

Engineering
Plan Views

PHYSICAL DATA	
Merchandiser Drip Pipe (in.)	1 1/4
Merchandiser Liquid Line (in.)	3/8
Merchandiser Suction Line (in.)	7/8

Meat, Delicatessen & Produce

10-2004

Dimensions shown as in. and (mm).

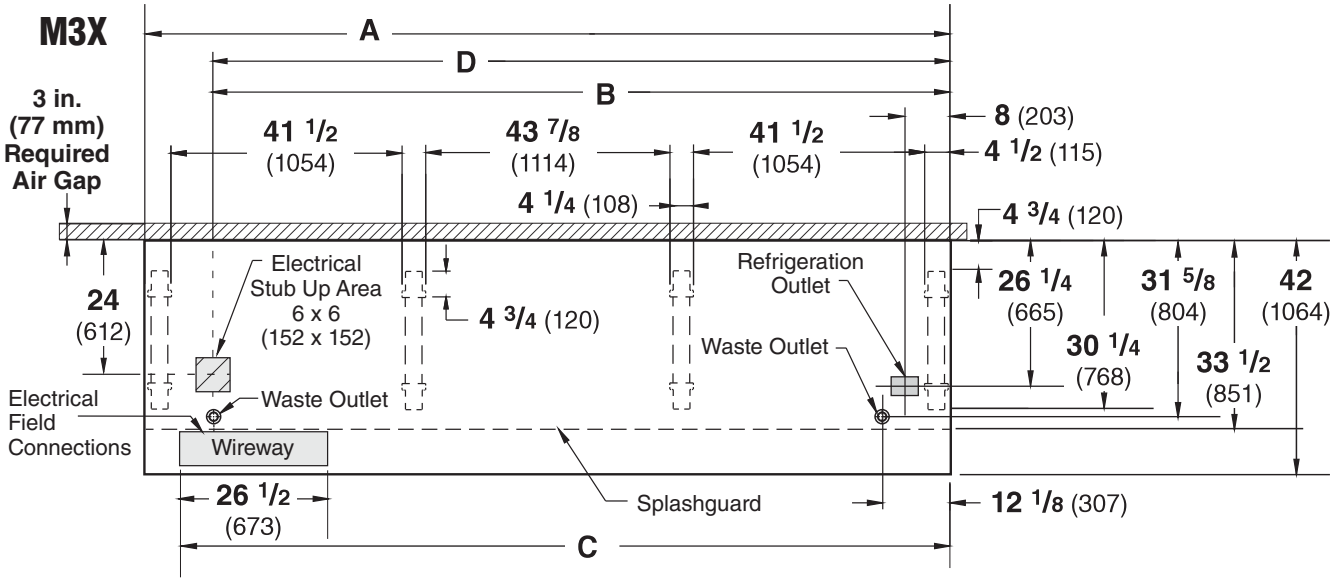

NOTE: Case-to-Case Electrical Connections are made IN FRONT OF SPLASHGUARD.

FRONT

	8 ft	12 ft
General		
(A) Case Length *(without ends or partitions)*	96 3/8 (2448)	144 1/2 (3670)
(Each end and insulated partition adds 1 1/2 in. (38 mm) to case line up.)		
Maximum O/S dimension of case back to front *(includes bumper)*	42 (1064)	42 (1064)
Back of case to front of splashguard	33 1/2 (851)	33 1/2 (851)
Back of case to O/S edge of front leg	30 1/4 (768)	30 1/4 (768)
Distance between edges of external legs and center legs	41 1/2 (1054)	41 1/2 (1054)
Distance between edges of center legs	NA	43 7/8 (1114)
Distance between front legs and splashguard	2 3/4 (70)	2 3/4 (70)
Electrical Service *(Electrical Field Wiring connection point)*		
(B) RH End of case to center of stub up area	84 1/4 (2140)	132 3/8 (3363)
Back of case to center of stub up area	24 (612)	24 (612)
Length of electrical wireway Wireway	26 1/2 (673)	26 1/2 (673)
(C) RH End of case to LH end of wireway	90 1/8 (2289)	138 1/4 (3511)
Waste Outlets *(One each end)*		
(D) RH End of case to the center of LH waste outlet	84 1/4 (2140)	132 3/8 (3363)
RH End of case to the center of RH waste outlet	12 1/8 (307)	12 1/8 (307)
Back O/S of case to center of waste outlets	31 5/8 (804)	31 5/8 (804)
Schedule 40 PVC drip pipe	1 1/4 (32)	1 1/4 (32)
Refrigeration Outlet		
Back of case to center of refrigeration outlet	26 1/4 (665)	26 1/4 (665)
RH end of case to center of refrigeration outlet	8 (203)	8 (203)

Multi-deck, 3 Display Levels

DOE 2017 Energy Efficiency Compliant

Hussmann refrigerated merchandisers configured for sale for use in the United States meet or surpass the requirements of the DOE 2017 energy efficiency standards.

Excel M3X-E

Meat, Delicatessen

Pre-cut and Packaged Produce

Dimensions shown as inches and (mm).

M3X-E

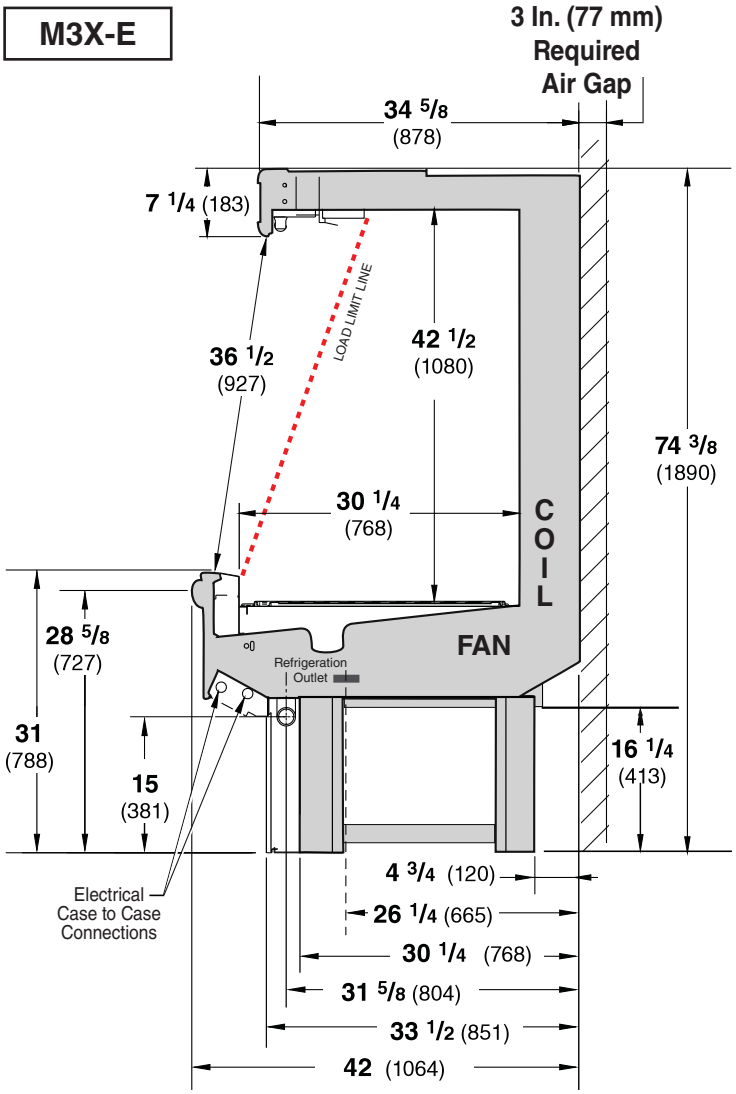

Estimated Charge**			M3X-E
8 ft	2.7 lb	43 oz	1.2 kg
12 ft	3.9 lb	62 oz	1.8 kg

**This is an average for all refrigerant types. Actual refrigerant charge may vary by approximately half a pound (8 oz/0.2 kg).

NSF Certification

This merchandiser model is manufactured to meet NSF/ANSI (National Sanitation Foundation) Standard #7 requirements for construction, materials & cleanability.

REFRIGERATION DATA

Note: This data is based on store temperature and humidity that does not exceed 75°F and 55% R.H.

	M3X-E§
Discharge Air (°F)	28
Evaporator (°F)	21
Unit Sizing (°F)	19

§ Average evaporator temperature shown. Use dew point for high glide refrigerants for unit sizing. Care should be taken to use the dew point in PT tables for measuring and adjusting superheat. Adjust evaporator pressure as needed to maintain discharge air temperature shown.

***Btu/hr/ft — Unlit Shelves*‡**

M3X-E	Parallel	Conventional
UNLIT	1028	1128

‡ Add 10 Btu/hr/ft ***per shelf row*** for LED fixtures. Add 20 Btu/hr/ft ***per shelf row*** for fluorescent lamps.

DEFROST DATA

	M3X-E
Frequency (hr)	6
Defrost Water (lb/ft/day)	7

(± 15% based on case configuration and product loading).

OFFTIME	M3X-E
Temp Term (°F)	48°F
Failsafe (minutes)	35

ELECTRIC OR GAS Not Recommended

Standard Defrost Thermostat

Close on rise: close 48°F — open 33°F

CONVENTIONAL CONTROLS

Low Pressure Backup Control

	M3X-E
CI/CO*	14°F / 4°F

Indoor Unit Only, Pressure Defrost Termination* 48°F

*Use a Temperature Pressure Chart to determine PSIG conversions.

Electrical Data

			8 ft	12 ft		
Number of Fans—12W			**2**	**3**		
			Amperes		**Watts**	
Evaporator Fan			**8 ft**	**12 ft**	**8 ft**	**12 ft**
120V	50/60Hz	Standard Energy Efficient	0.60	0.90	36	54
230V	50/60Hz	Standard Energy Efficient	0.30	0.45	36	54
230V	60Hz	Export	0.66	0.99	100	150
230V	50Hz	Export	0.76	1.14	114	171
Minimum Circuit Ampacity						
120V	50/60Hz	Standard Energy Efficient	0.80	1.10		
230V	50/60Hz	Standard Energy Efficient	0.50	0.65		
230V	60Hz	Export	0.86	1.19		
230V	50Hz	Export	0.96	1.34		
Maximum Over Current Protection 120V			**20**	**20**		
Maximum Over Current Protection 230V			15	15		
Standard Lighting (T-8 fluorescent)						
1 Row Canopy			0.51	0.77	59	85

ONLY LIGHTING CONFIGURATIONS THAT ARE COMPLIANT WITH THE U.S. DEPT. OF ENERGY (DOE) 2017 REGULATION ARE AVAILABLE FOR SALE FOR USE IN THE U.S.A.

Optional Lighting (T-8 fluorescent)				
Additional 1 Row Canopy	0.51	0.77	59	85
Additional 2 Row Canopy	1.02	1.54	118	170
Additional 3 Row Canopy	1.53	2.31	177	255
1 Row Rail Light	0.51	0.77	59	85
2 Rows of Shelves	1.02	1.54	118	170
2 Row Canopy	0.71	1.08	85	130
EcoShine II Canopy				
EcoShine II	0.32	0.48	38.6	58.0
EcoShine II HO	0.44	0.66	53.0	79.4
EcoShine II Rail Light —1 Row	0.16	0.25	19.8	29.7
EcoShine II Shelves				
2 Rows of Shelves	0.33	0.49	39.5	59.3

120V Lighting Circuit Total = Standard Lighting + Total Optional Lighting + Optional Shelf Lighting
120V LED Lighting Circuit Total = Canopy Lighting + Shelf Lighting
230V Lighting Circuit Total = Multiply 120V Lighting Circuit Total by 0.52

Please note: some combinations of fluorescent lights on this case model may not be compliant with DOE 2017 and may not be available to order in the US and Canada. More lighting options are available with LED lights. The Hussmann Product Configurator will not allow lighting options that do not comply with the DOE 2017 standards.

Product Data

Recommended Usable Cube [1] ***(Cu Ft/Ft)***	6.04 ft^3/ft (0.56 m^3/m)
AHRI Total Display Area [2] ***(Sq Ft/Ft)***	3.04 ft^2/ft (0.93 m^2/m)
Shelf Area [3] ***(Sq Ft/Ft)***	5.37 ft^2/ft (1.64 m^2/m)

[1] AHRI Refrigerated Volume less shelving and other unusable space: Refrigerated Volume/Unit of Length, ft^3/ft [m^3/m]
[2] Computed using AHRI 1200 standard methodology: Total Display Area, ft^2 [m^2]/Unit of Length, ft [m]
[3] Shelf surface area is composed of bottom deck plus standard shelf complement, as shown in the Hussmann ***Product Reference Guide***. The standard shelf complement for this model is (1) row of 16-inch shelf and (1) row of 18-inch shelf.

ESTIMATED SHIPPING WEIGHT [4]

Case			**Solid End**
	8 ft	***12 ft***	***(each)***
lb *(kg)*	1000 (454)	1300 (590)	75 (34)

[4] Actual weights will vary according to optional kits included.

Fan Wiring
Offtime Defrost

2 & 3 Fans

8 ft – 2 Fans
12 ft – 3 Fans

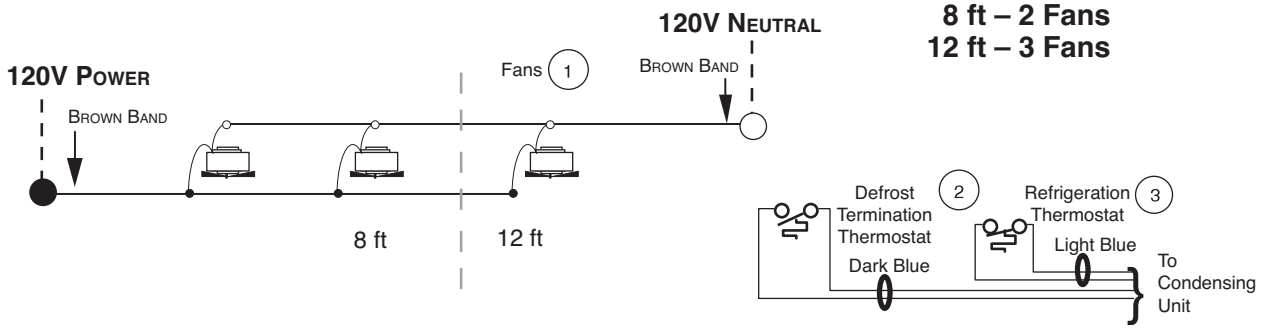

Light Circuits — Fluorescent Fixtures

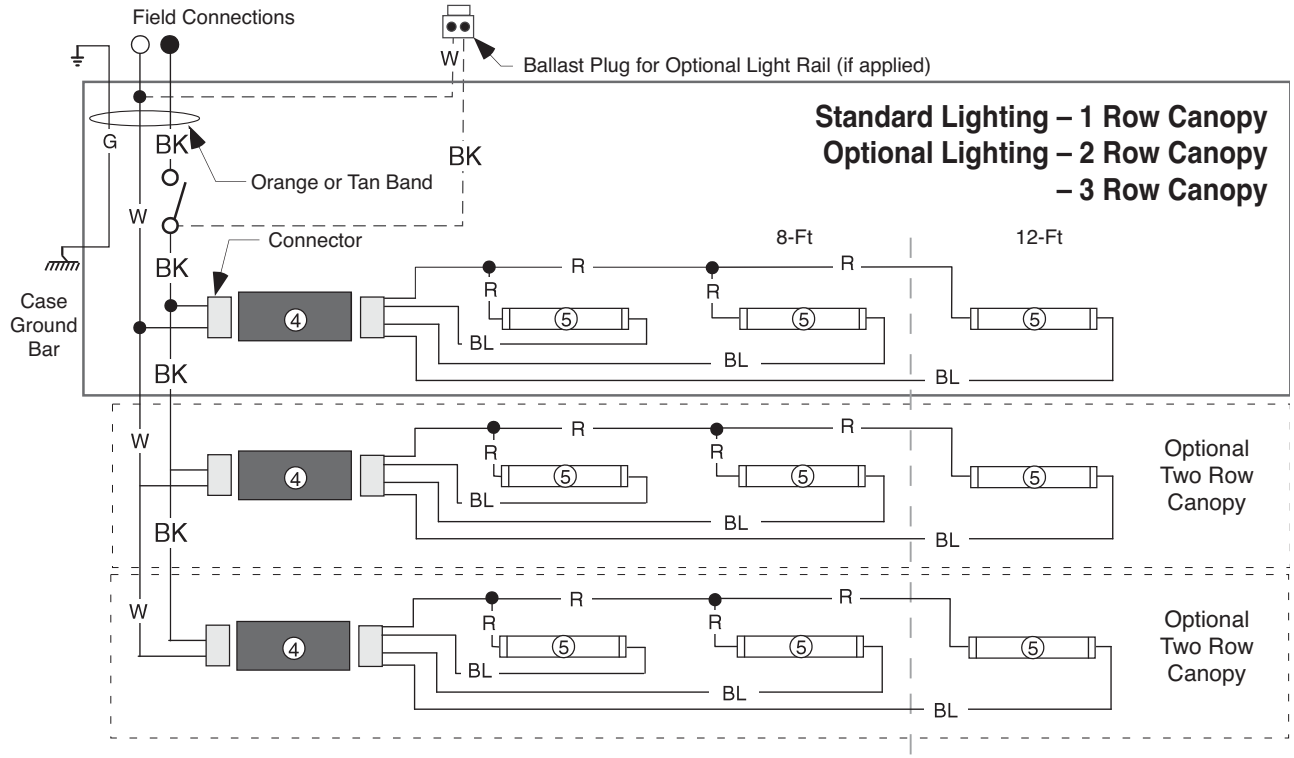

Optional Lighting – 1 Row Rail

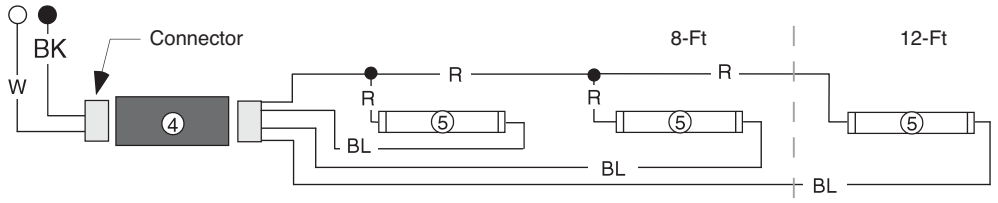

WARNING

All components must have mechanical ground, and the merchandiser must be grounded.

Circled numbers = Parts List Item Numbers

R = Red Y = Yellow G = Green BL = Blue BK = Black W = White

● = **120V Power** ○ = **120V Neutral** ⏚ = **Field Ground** ⏦ = **Case Ground**

Optional Shelf Harness and Light Circuits for Two Rows of Shelves

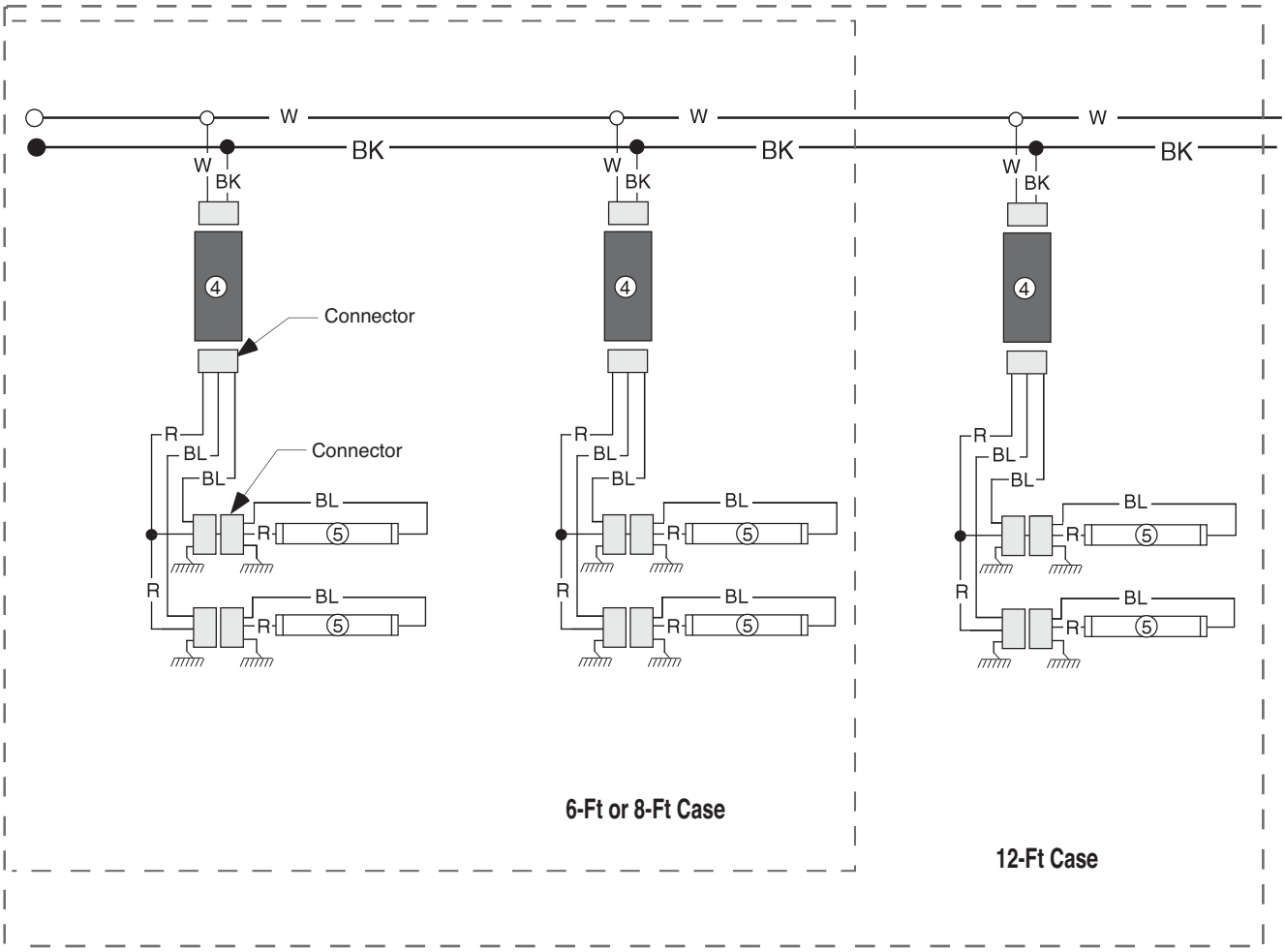

WARNING

All components must have mechanical ground, and the merchandiser must be grounded.

CIRCLED NUMBERS = PARTS LIST ITEM NUMBERS

R = Red Y = Yellow G = Green BL = Blue BK = Black W = White

● = **120V POWER** ○ = **120V NEUTRAL** ⏚ = **FIELD GROUND** ▨ = **CASE GROUND**

Optional Canopy and Rail Light Circuits — LED Fixtures

EcoShine II LED Canopy Lighting – 1 Row

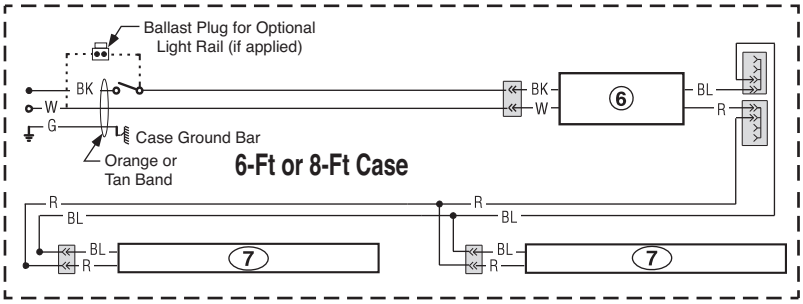

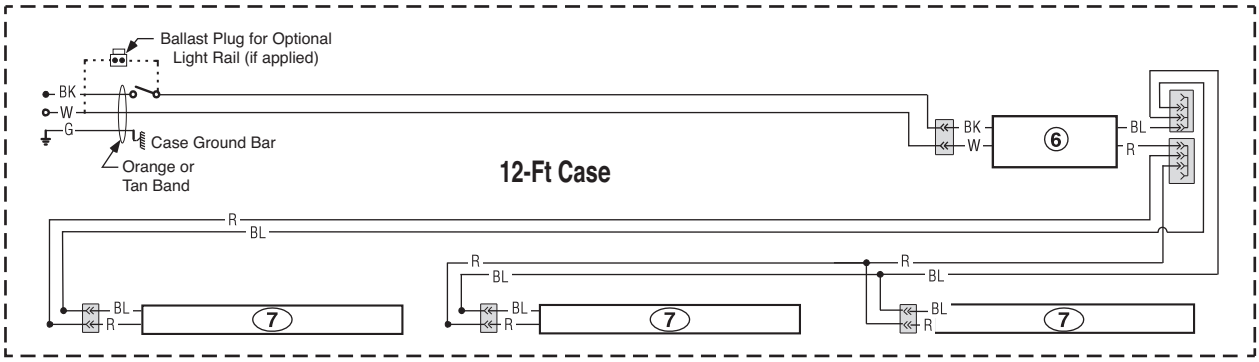

EcoShine II LED Rail Lighting – 1 Row

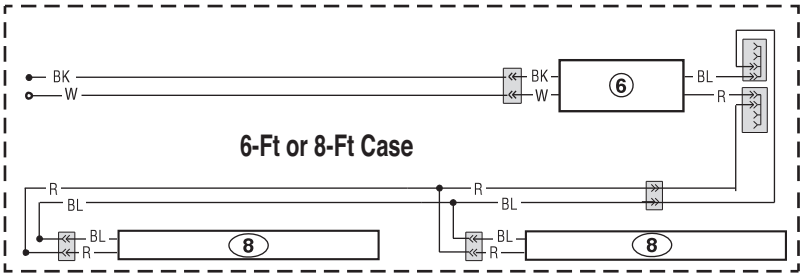

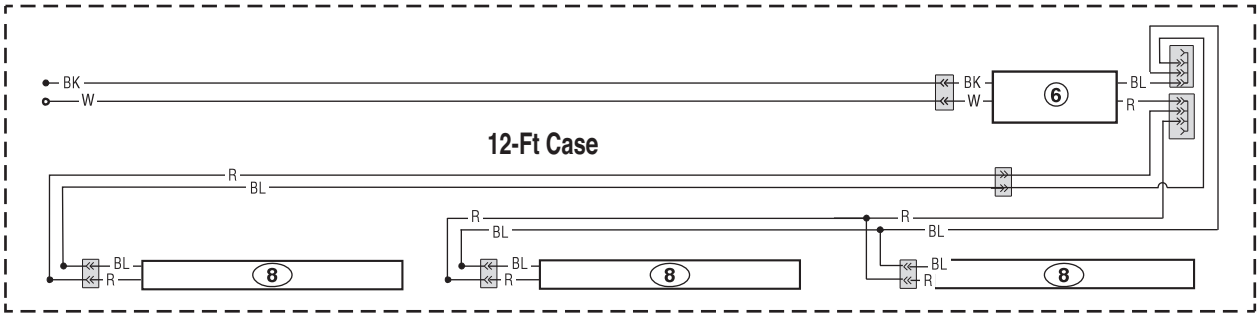

WARNING

All components must have mechanical ground, and the merchandiser must be grounded.

CIRCLED NUMBERS = PARTS LIST ITEM NUMBERS

R = Red Y = Yellow G = Green BL = Blue BK = Black W = White

● = **120V POWER** ○ = **120V NEUTRAL** ⏚ = **FIELD GROUND** = **CASE GROUND**

Optional Shelf Harness and LED Light Circuits for 2 or 3 Rows of Shelves

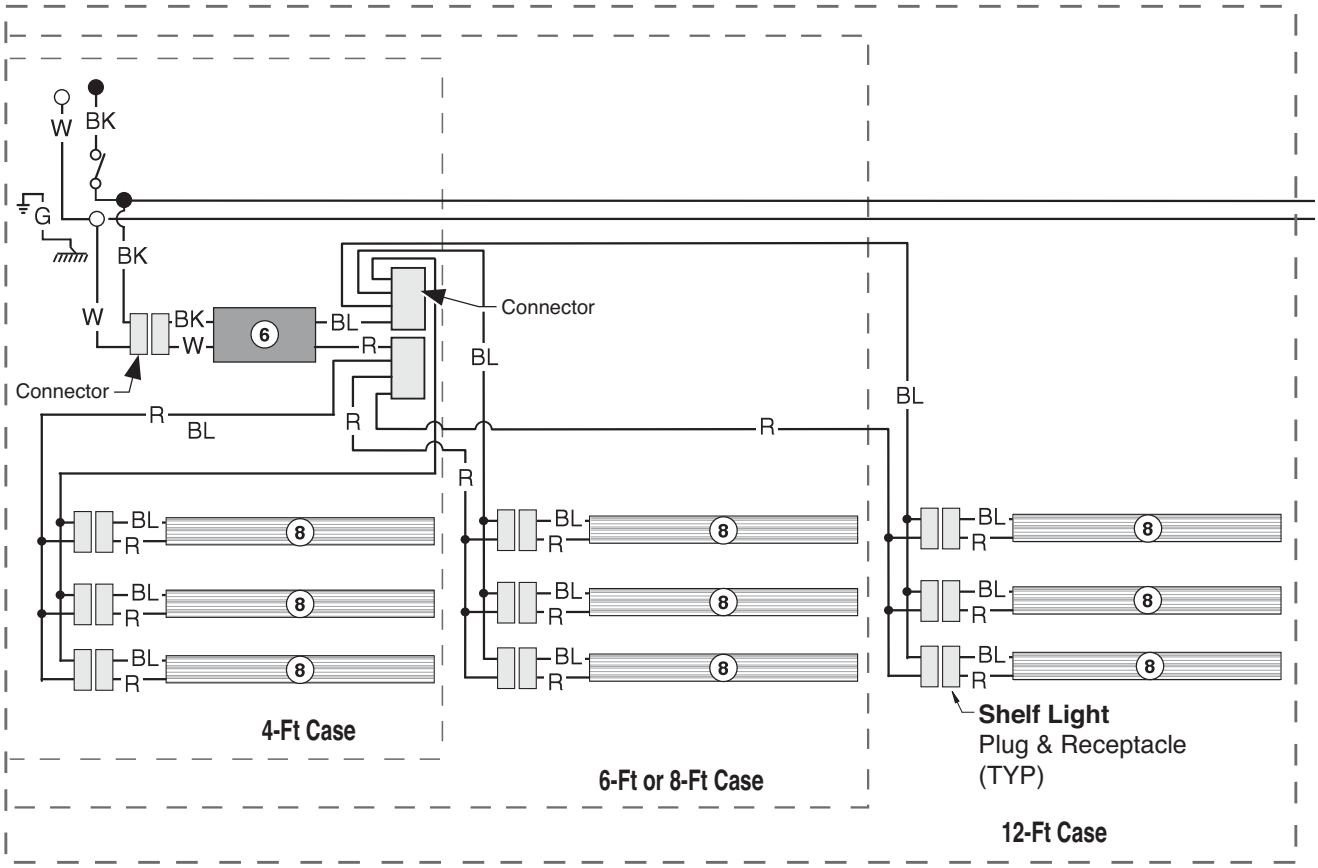

WARNING

All components must have mechanical ground, and the merchandiser must be grounded.

CIRCLED NUMBERS = PARTS LIST ITEM NUMBERS

R = Red G = Green BL = Blue BK = Black W = White

● = **80V POWER** ○ = **80V NEUTRAL** ⏚ = **FIELD GROUND** = **CASE GROUND**