IMPORTANT NOTE:
Locate the Specification Label on unit to determine exact Model Name and electrical specifications. This information is needed to identify the correct replacement parts. See exploded view illustration(s) for Specification Label location.

⚠ CAUTION

Use of replacement parts other than those supplied by Hatco Corporation may result in damage to unit or injury to personnel and will void all warranties.

Glo-Ray®
Round Heated Stone Shelves

GRSSR and GRSSR-DL Series

Model Name	Page
GRSSR	2
GRSSR-DL	4

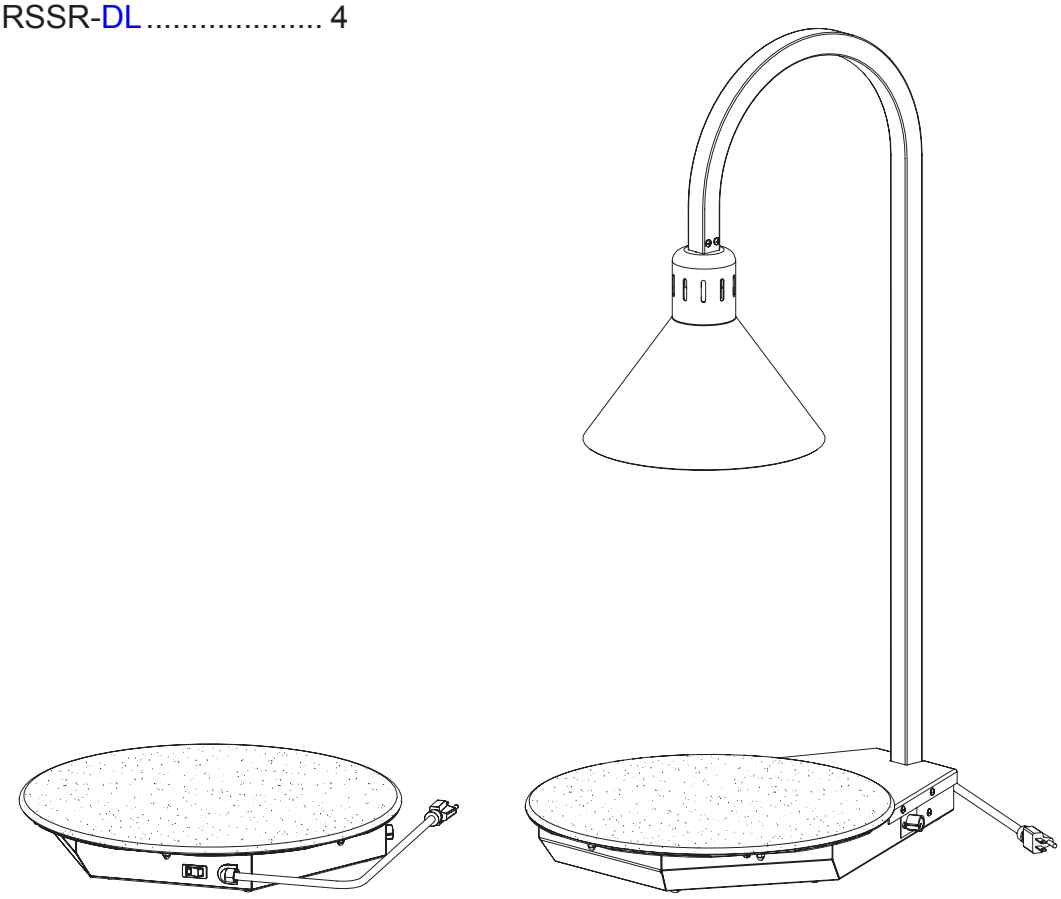

Replacement Parts List

© 2018 Hatco Corporation

Glo-Ray® Round Heated Stone Shelves
GRSSR Series

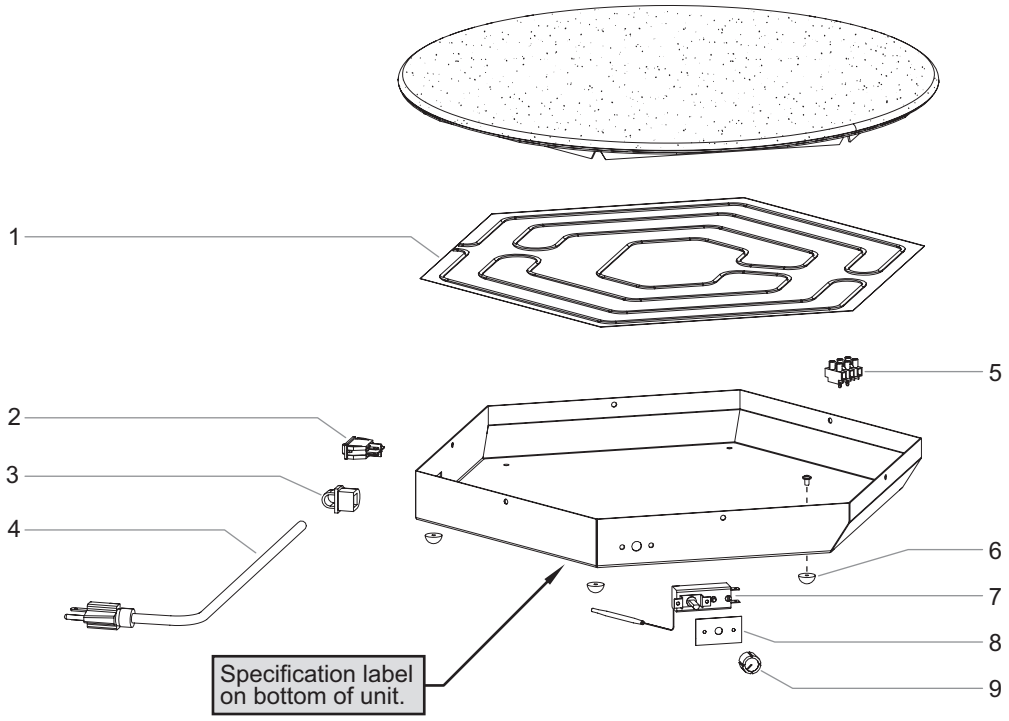

Item	Description	Part Number	Qty.
1	Blanket Heater		
	120 V		
	GRSSR-16	02.05.635.00	1
	GRSSR-18	02.05.636.00	1
	GRSSR-20	02.05.630.00	1
	220, 220–230, 230–240 V		
	GRSSR-16	02.05.637.00	1
	GRSSR-18	02.05.638.00	1
	GRSSR-20	02.05.639.00	1
2	Rocker Switch		
	120 V	02.19.080.00	1
	220, 220–230, 230–240 V	02.19.081.00	1
3	Cord Grip		
	Straight	02.20.212.00	1
	Right Angle	02.20.330.00	1
4	Power Cord		
	NEMA 5-15P	R02.18.030.00	1
	NEMA 5-20P	R02.18.089.00	1
	BS-1363	02.18.066.00	1
	CEE 7/7 Schuko	02.18.077.00	1
	AS 3112	02.18.207.00	1

Item	Description	Part Number	Qty.
5	Terminal Block	R02.15.030.00	1
6	Foot, Rubber	R05.30.068.00	6
7	Thermostat Control	R02.16.066.00	1
8	Label, Control Panel	07.03.535.00	1
9	Knob, Thermostat	05.30.039.00	1
10	Legs, 4″ (optional, not shown)	05.30.007.00	4
	Wiring Diagrams		
	120 V	10-01-562	
	220, 220–230, 230–240 V	10-01-601	

NOTE: The last four digits in a ten digit numerical serial number are the manufacturing date code: 962506**1404**

Year 2014

Week Four

The shaded areas contain information for **International models only.**

Glo-Ray® Round Heated Stone Shelves with Decorative Lamp

GRSSR-DL Series

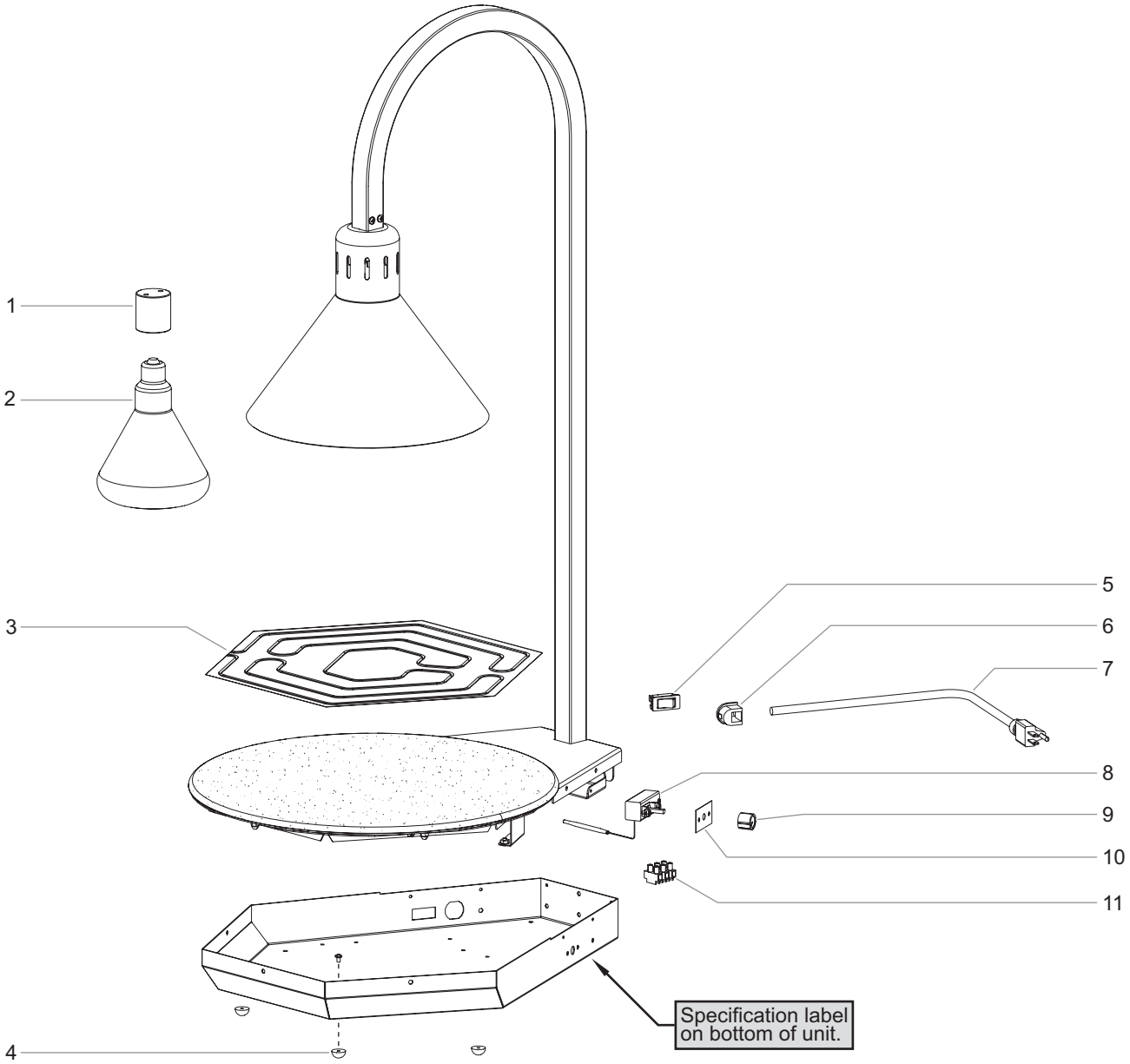

Item	Description	Part Number	Qty.
1	Lamp Socket	02.30.104.00	1
2	Bulb		
	120 V, 250 W, White, Coated	02.30.069.00	1
	120 V, 250 W, White, Uncoated	02.30.071.00	1
	120 V, 250 W, Red, Coated	02.30.068.00	1
	120 V, 250 W, Red, Uncoated	02.30.070.00	1
	240 V, 250 W, White, Coated	02.30.100.00	1
	240 V, 250 W, White, Uncoated	02.30.083.00	1
3	Blanket Heater		
	120 V		
	GRSSR16-DL	02.05.635.00	1
	GRSSR18-DL	02.05.636.00	1
	GRSSR20-DL	02.05.630.00	1
	220, 220–230, 230–240 V		
	GRSSR16-DL	02.05.637.00	1
	GRSSR18-DL	02.05.638.00	1
	GRSSR20-DL	02.05.639.00	1
4	Foot, Rubber	R05.30.068.00	6
5	Rocker Switch		
	120 V	02.19.177.00	1
	220, 220–230, 230–240 V	02.19.081.00	1
6	Cord Grip		
	Straight	02.20.212.00	1
	Right Angle	02.20.330.00	1
7	Power Cord		
	NEMA 5-15P	R02.18.030.00	1
	NEMA 5-20P	R02.18.089.00	1
	BS-1363	02.18.066.00	1
	CEE 7/7 Schuko	02.18.077.00	1
	AS 3112	02.18.207.00	1

Item	Description	Part Number	Qty.
8	Thermostat Control	R02.16.066.00	1
9	Knob, Thermostat	05.30.039.00	1
10	Label, Control Panel	07.03.535.00	1
11	Terminal Block	R02.15.030.00	1
12	Legs, 4″ (optional, not shown)	05.30.007.00	4
	Wiring Diagrams		
	120 V	10-01-563	
	220, 220–230, 230–240 V	10-01-591	

NOTE: The last four digits in a ten digit numerical serial number are the manufacturing date code: 962506**1404**

Year 2014

Week Four

The shaded areas contain information for **International models only.**

NOTES

AUTHORIZED PARTS DISTRIBUTORS • AUTORISÉS DISTRIBUTEURS DE PIÈCES

ALABAMA

Jones McLeod Appl. Svc.
Birmingham 205-251-0159

ARIZONA

Service Solutions Group
Phoenix 602-234-2443

Byassee Equipment Co.
Phoenix 602-252-0402

CALIFORNIA

Industrial Electric
Commercial Parts & Service, Inc.
Huntington Beach 714-379-7100

Chapman Appl. Service
San Diego 619-298-7106

P & D Appliance
Commercial Parts & Service, Inc.
S. San Francisco 650-635-1900

COLORADO

Hawkins Commercial Appliance
Englewood 303-781-5548

FLORIDA

Whaley Foodservice Repair
Jacksonville 904-725-7800

Whaley Foodservice Repair
Orlando 407-757-0851

B.G.S.I.
Pompano Beach 954-971-0456

Comm. Appliance Service
Tampa 813-663-0313

GEORGIA

TWC Services
Mableton 770-438-9797

Heritage Service Group
Norcross 866-388-9837

Southeastern Rest. Svc.
Norcross 770-446-6177

HAWAII

Burney's Comm. Service, Inc.
Honolulu 808-848-1466

Food Equip Parts & Service
Honolulu 808-847-4871

ILLINOIS

Parts Town
Lombard 708-865-7278

Eichenauer Elec. Service
Decatur 217-429-4229

Midwest Elec. Appl. Service
Elmhurst 630-279-8000

Cone's Repair Service
Moline 309-797-5323

INDIANA

GCS Service
Indianapolis 800-727-8710

IOWA

Goodwin Tucker Group
Des Moines 515-262-9308

KENTUCKY

Service Solutions Group
Lexington 859-254-8854

Service Solutions Group
Louisville 502-451-5411

LOUISIANA

Chandlers Parts & Service
Baton Rouge 225-272-6620

MARYLAND

Electric Motor Service
Baltimore 410-467-8080

GCS Service
Silver Spring 301-585-7550

MASSACHUSETTS

Ace Service Co., Inc.
Needham 781-449-4220

MICHIGAN

Bildons Appliance Service
Detroit 248-478-3320

Commercial Kitchen Service
Bay City 989-893-4561

Midwest Food Equip. Service
Grandville 616-261-2000

MINNESOTA

GCS Service
Minnetonka 800-822-2303 x20365

MISSOURI

General Parts
Kansas City 816-421-5400

Commercial Kitchen Services
St. Louis 314-890-0700

Kaemmerlen Parts & Service
St. Louis 314-535-2222

NEBRASKA

Anderson Electric
Omaha 402-341-1414

NEVADA

Burney's Commercial
Las Vegas 702-736-0006

Hi. Tech Commercial Service
N. Las Vegas 702-649-4616

NEW JERSEY

Jay Hill Repair
Fairfield 973-575-9145

Service Plus
Flanders 973-691-6300

NEW YORK

Alpro Service Co.
Maspeth 718-386-2515

Appliance Installation
Buffalo 716-884-7425

Duffy's Equipment Services, Inc.
Buffalo 800-836-1014

3Wire Northern
Plattsburgh 800-634-5005

Duffy's Equipment Services, Inc.
Sauquoit 800-836-1014

J.B. Brady, Inc.
Syracuse 315-422-9271

NORTH CAROLINA

Authorized Appliance
Charlotte 704-377-4501

OHIO

Akron/Canton Comm. Svc. Inc.
Akron 330-753-6634

Service Solutions Group
Cincinnati 513-772-6600

Commercial Parts and Service
Columbus 614-221-0057

Electrical Appl. Repair Service
Brooklyn Heights 216-459-8700

E. A. Wichman Co.
Toledo 419-385-9121

OKLAHOMA

Hagar Rest. Service, Inc.
Oklahoma City 405-235-2184

Krueger, Inc.
Oklahoma City 405-528-8883

OREGON

Ron's Service, Inc.
Portland 503-624-0890

PENNSYLVANIA

Elmer Schultz Services
Philadelphia 215-627-5401

FAST Comm. Appl. Service
Philadelphia 215-288-4800

Appliance Installation & Service
Pittsburgh 412-809-0244

K & D Service Co.
Harrisburg 717-236-9039

Electric Repair Co.
Reading 610-376-5444

RHODE ISLAND

Marshall Electric Co.
Providence 401-331-1163

SOUTH CAROLINA

Whaley Foodservice Repair
Lexington 803-996-9900

TENNESSEE

Camp Electric
Memphis 901-527-7543

TEXAS

GCS Service
Fort Worth 800-433-1804

Armstrong Repair Service
Houston 713-666-7100

Cooking Equipment Specialist
Mesquite 972-686-6666

Commercial Kitchen Repair Co.
San Antonio 210-735-2811

UTAH

La Monica's Rest. Equip. Service
Murray 801-263-3221

VIRGINIA

Daubers
Norfolk 757-855-4097

Daubers
Springfield 703-866-3600

WASHINGTON

3Wire Restaurant Appliance
Seattle 800-207-3146

WISCONSIN

A.S.C., Inc.
Madison 608-246-3160

A.S.C., Inc.
Milwaukee 414-543-6460

CANADA

ALBERTA

Key Food Equipment Service
Edmonton 780-438-1690

BRITISH COLUMBIA

Key Food Equipment Service
Vancouver 604-433-4484

Key Food Equipment Service
Victoria 250-920-4888

MANITOBA

Air Rite, Inc.
Winnipeg 204-895-2300

NEW BRUNSWICK

EMR Services, Ltd.
Moncton 506-855-4228

ONTARIO

R.G. Henderson Ltd.
Toronto 416-422-5580

Choquette - CKS, Inc.
Ottawa 613-739-8458

QUÉBEC

Choquette - CKS, Inc.
Montreal 514-722-2000

Choquette - CKS, Inc.
Québec City 418-681-3944

UNITED KINGDOM

Marren Group
Northants +44(0)1933 665313

HATCO CORPORATION
P.O. Box 340500
Milwaukee, WI 53234-0500 U.S.A.
800-558-0607 414-671-6350
partsandservice@hatcocorp.com
www.hatcocorp.com

24 Hour 7 Day Parts and Service Assistance available in the United States and Canada by calling 800-558-0607.

Printed in U.S.A. May 2018 Form No. GRSSRDLRP-0518