IMPORTANT NOTE:
Locate the Specification Label on unit to determine exact Model Name and electrical specifications. This information is needed to identify the correct replacement parts. See exploded view illustration(s) for Specification Label location.

⚠ CAUTION

Use of replacement parts other than those supplied by Hatco Corporation may result in damage to unit or injury to personnel and will void all warranties.

Flav-R-Fresh®

Humidified Impulse Display Cabinets

FDWD Series

Model Name	Page	Model Name	Page	Model Name	Page
FDWD-1	2	FDWD-2	2	FDWD-12	2
FDWD-1X	2	FDWD-2X	2	FDWDE	2

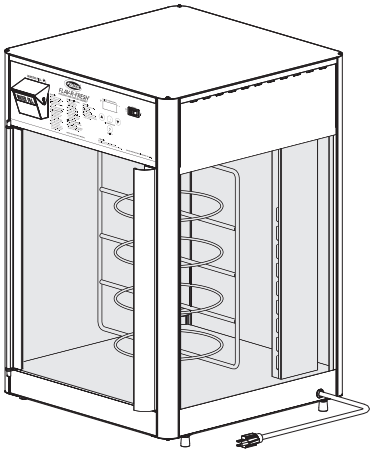

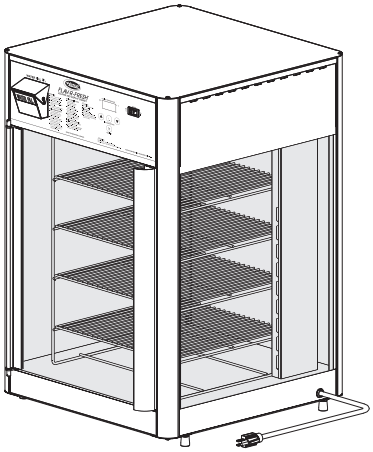

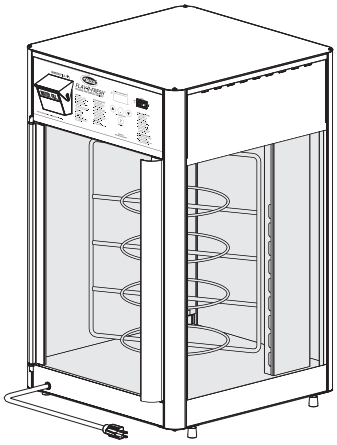

Replacement Parts List

© 2015 Hatco Corporation

HATCO FLAV-R-FRESH HUMIDIFIED IMPULSE DISPLAY CABINETS

FDWD-1, FDWD-1X, FDWD-2, FDWD-2X, FDWD-12, FDWDE Models

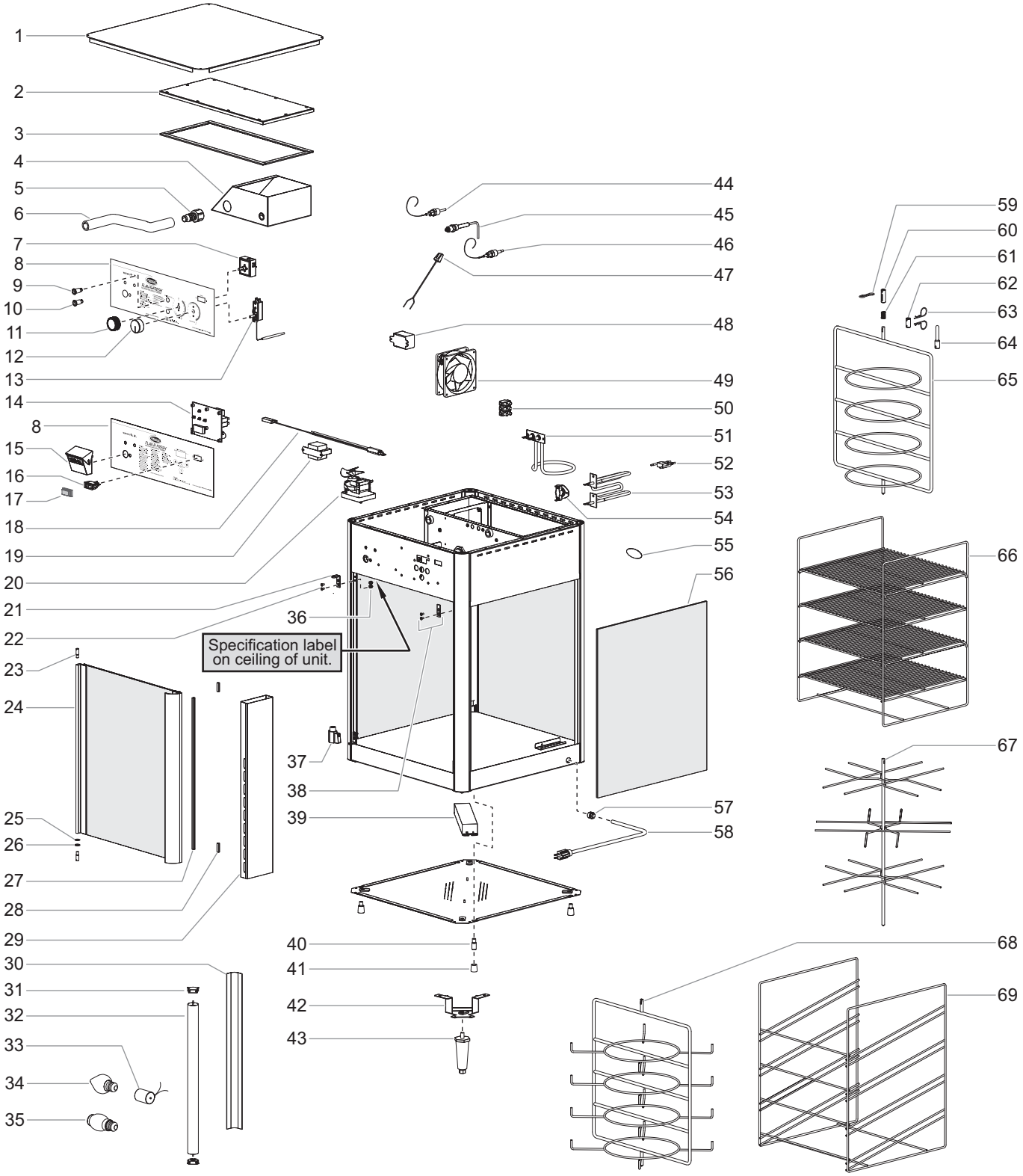

NOTE: The last four digits in a ten digit numerical serial number are the manufacturing date code: 962506**1404**

Year 2014

Week Four

Item	Description	Part No.	Qty.
1	Hood/Top Cover		
	Black	04.24.204.01	1
	Gray Granite	04.24.204.02	1
	Warm Red	04.24.204.03	1
	White Granite	04.24.204.04	1
	Navy Blue	04.24.204.05	1
	Hunter Green	04.24.204.07	1
	Antique Copper	04.24.204.21	1
2	Air Chamber Cover		
	FDWD-1, -1X, -2, -2X	04.24.191.00	1
	FDWDE	04.24.237.00	1
	FDWD-12	04.24.263.00	1
3	Gasket, Air Chamber ‡	05.06.028.00	4′
4	Water Tank		
	FDWD-1, -1X, -2, -2X	04.24.206.00	1
	FDWDE	04.24.238.00	1
	FDWD-12	04.24.264.00	1
5	Plumbing Kit	R03.40.058.00	1
6	Fill Tube ‡	03.40.051.00	1′
7	Infinite Switch **		
	100 V	02.19.160.00	1
	120 V	02.19.077.00	1
	220 V	02.19.079E.00	1
	220–230, 230–240 V	02.19.079CE.00	1
8	Decal, Control Plate		
	FDWD-1, -1X, -2, -2X (Electronic)	07.03.540.00	1
	FDWDE (Mechanical)	07.03.569.00	1
	FDWD-12 (Electronic w/ humidity)	07.03.588.00	1
	FDWD-12 (Electronic w/o humidity)	07.03.713.00	1
9	Indicator Light, Green **		
	100, 120 V	02.19.155.00	1
	220, 240, 220–230, 230–240 V	02.19.150.00	1
10	Indicator Light, Red **		
	100, 120 V	02.19.154.00	1
	220, 240, 220–230, 230–240 V	02.19.151.00	1
11	Knob, Infinite Switch **	05.30.019.00	1
12	Knob, Thermostat **	05.30.047.00	1
13	Thermostat **	R02.16.039.00	1
14	Electronic Thermostat Control, 24 V		
	w/ humidity	02.01.273.00	1
	w/o humidity	02.01.273A.00	1
15	Fill Cup Assembly	R05.30.050.00	1
16	On/Off Switch		
	FDWD-1, -1X, -2, -2X, 12		
	100, 120 V	02.19.080.00	1
	220, 240, 220–230, 230–240 V	02.19.081.00	1
	FDWDE	02.19.161.00	1
17	Rubber Boot, Rocker Switch	02.20.482.00	1
18	Proximity Switch Assembly (Motorized Rack Models)	R02.13.346.00	1

Item	Description	Part No.	Qty.
19	Transformer, 24 V		
	100, 120 V	02.17.022.00	1
	220, 240, 220–230, 230–240 V	02.17.023.00	1
20	Rack Motor (Motorized Rack Models)		
	FDWD-1, -2, -12 ♦		
	100, 120 V	02.12.141.00	1
	220, 240, 220–230, 230–240 V	02.12.143.00	1
	FDWDE		
	120 V	02.12.141.00	1
	220 V	02.12.143.00	1
21	Door Hinge Bracket	04.17.674.00	2–4
22	Screw, Door Hinge Bracket	05.04.442.00	4–8
23	Hinge Pin Screw, Door	05.04.146.00	2–4
24	Door Assembly (includes items 20, 21, 22, 24–27, 35, and 37)		
	FDWD-1, -1X, -2, -2X, FDWDE		
	Standard	R04.40.284.00	1–2
	Black	R04.40.284.01	1–2
	Gray Granite	R04.40.284.02	1–2
	Warm Red	R04.40.284.03	1–2
	White Granite	R04.40.284.04	1–2
	Navy Blue	R04.40.284.05	1–2
	Hunter Green	R04.40.284.07	1–2
	Antique Copper	R04.40.284.21	1–2
	FDWD-12		
	Standard	R04.40.326.00	1–2
	Door Assembly with Mirror Glass	R04.40.371.00	1–2
25	Nylon Washer, 0.032"	05.11.006.00	1–2
26	Nylon Washer, 0.062"	05.11.007.00	1–2
27	Door Gasket	R00.01.0134.00	1–2
28	Door Magnet	R05.30.076.00	1–2
29	Air Diffuser Tube	04.24.124.00	1
30	Light Cover — Fluorescent *	02.30.076.00	2
31	Light Socket — Fluorescent *	02.30.073.00	4
32	Fluorescent Light, 15 W *	02.30.074.00	2
33	Light Socket — Incandescent		
	FDWD-1, -1X, -2, -2X †	02.30.039.00	1
	FDWDE	02.30.040.00	1
34	Light Bulb, Coated Incandescent †		
	100, 120 V	02.30.043.00	1
	220, 240, 220–230, 230–240 V	02.30.058.00	1
35	Light Bulb, Coated Halogen (optional) †		
	100, 120 V	02.30.081.00	1
	220, 240, 220–230, 230–240 V	02.30.082.00	1
36	Acorn Nut	05.04.443.00	4
37	Drain Valve	03.40.105.00	1
38	Striker Plate and Hardware, Door	R04.17.675.00	2–4

continued...

The shaded areas contain information for **International models only.**

‡ Item sold in one foot increments.

** FDWDE units only.

♦ FDWD units with date code 1339 and older, use P/N 02.12.004 on domestic units and P/N 02.12.026.00 on export units.

* Item used on FDWD units with date code 0920 and newer.

† Item used on FDWD units with date code 0919 and older.

Item	Description	Part No.	Qty.
39	Ballast Assembly *		
	120 V	02.30.132.00	1
	220–230, 230–240 V	02.30.180.00	1
40	Leg, 1" (standard)	05.04.087.00	4
41	Boot, Leg, 1" (standard)	05.06.038.00	4
42	Bracket, Leg, 4" (optional) †	04.24.235.01	4
43	Leg, 4" (optional)	05.30.007.00	4
44	Temperature Probe	02.01.203.00	1
45	Probe, Low Water	02.40.045.00	1
46	Water Level/Temperature Probe	02.01.204.00	1
47	Connector Cord, Blower	02.12.001A.00	1
48	Relay **		
	100 V	02.01.187.00	1
	120 V	02.01.028.00	1
	220, 220–230, 220–230 V	02.01.043.00	1
49	Blower Motor		
	100, 120 V	R02.12.001.00	1
	220, 240, 220–230, 230–240 V	02.12.006.00	1
50	Terminal Block	R02.15.030.00	1
51	Water Element, 325 W		
	100 V	R02.05.512E.00	1
	120 V	R02.05.006.00	1
	220, 220–230 V	R02.05.016E.00	1
	240, 230–240 V	R02.05.013E.00	1
52	Resistor	02.13.307.00	1
53	Air Element		
	FDWD-1, -1X, -2, -2X, FDWDE		
	100 V, 1050 W	R02.05.511E.00	1
	120 V, 1000 W	R02.05.626.00	1
	220, 220–230 V, 1050 W	R02.05.015E.00	1
	240, 230–240 V, 1050 W	R02.05.012E.00	1
	FDWD-12	R02.05.702.00	1
54	High Limit Disc	R02.16.118.00	1
55	Dome Logo	07.02.005.00	1
56	Side Glass Panel		
	FDWD-1, -1X, -2, -2X, FDWDE	04.40.254.00	2–3
	FDWD-12	04.40.325.00	2–3
57	Cord Grip		
	FDWD-1, -1X, -2, -2X	02.20.276.00	1
	FDWDE, FDWD-12	02.20.331.00	1

The shaded areas contain information for **International models only.**

* Item used on FDWD units with date code 0920 and newer.

** FDWDE units only.

† Item used on FDWD units with date code 0919 and older.

■ Item used on FDWD units with date code 1339 and newer.

Item	Description	Part No.	Qty.
58	Power Cord		
	NEMA 5-15P, 15 A	02.18.035.00	1
	NEMA 5-15P, 13 A	02.18.084.00	1
	CEE 7/7 Schuko	02.18.109.00	1
	BS-1363	02.18.120.00	1
	AS-3112	02.20.071.00	1
59	Butterfly Pin ■	05.04.730.00	1
60	Rack Coupling ■	04.24.357.00	1
61	Spring, Coupling ■	05.08.036.00	1
62	Rack Coupling w/Pins (includes two Cotter Pins)	R04.17.078.00	1
63	Cotter Pin	05.04.352.00	2
64	Motorless Rack Coupling w/Pin (includes a Cotter Pin)	R04.24.087.00	1
65	4 Tier Circle Rack		
	FDWD-1, -1X, -2, -2X, FDWDE	04.24.025.00	1
	FDWD-12	04.24.261.00	1
66	4 Shelf Multi-Purpose Rack	R04.17.016.00	1
67	3 Tier Pretzel Rack	04.17.079.00	1
68	4 Tier Circle Rack w/Retainers	04.24.301.00	1
69	4 Shelf Angle Rack	R04.17.018.00	1
	Wiring Diagram		
	FDWD-1, -1X, -2, -2X, -12		
	100, 120, 220, 240 V	10-01-555	
	220–230, 230–240 V	10-01-760	
	FDWDE		
	100, 120, 220 V	10-01-629	
	220–230, 230–240 V	10-01-761	

NOTES

NOTES

NOTES

AUTHORIZED PARTS DISTRIBUTORS • AUTORISÉS DISTRIBUTEURS DE PIÈCES

ALABAMA
Jones McLeod Appl. Svc.
Birmingham 205-251-0159

ARIZONA
Service Solutions Group
Phoenix 602-234-2443

Byassee Equipment Co.
Phoenix 602-252-0402

CALIFORNIA
Industrial Electric
Commercial Parts & Service, Inc.
Huntington Beach 714-379-7100

Chapman Appl. Service
San Diego 619-298-7106

P & D Appliance
Commercial Parts & Service, Inc.
S. San Francisco 650-635-1900

COLORADO
Hawkins Commercial Appliance
Englewood 303-781-5548

FLORIDA
Whaley Foodservice Repair
Jacksonville 904-725-7800

3Wire Nass Service Co., Inc.
Orlando 407-425-2681

B.G.S.I.
Pompano Beach 954-971-0456

Comm. Appliance Service
Tampa 813-663-0313

GEORGIA
TWC Services
Mableton 770-438-9797

Heritage Service Group
Norcross 866-388-9837

Southeastern Rest. Svc.
Norcross 770-446-6177

HAWAII
Burney's Comm. Service, Inc.
Honolulu 808-848-1466

Food Equip Parts & Service
Honolulu 808-847-4871

ILLINOIS
Parts Town
Lombard 708-865-7278

Eichenauer Elec. Service
Decatur 217-429-4229

Midwest Elec. Appl. Service
Elmhurst 630-279-8000

Cone's Repair Service
Moline 309-797-5323

INDIANA
GCS Service
Indianapolis 800-727-8710

IOWA
Goodwin Tucker Group
Des Moines 515-262-9308

KENTUCKY
Service Solutions Group
Lexington 859-254-8854

Service Solutions Group
Louisville 502-451-5411

LOUISIANA
Chandlers Parts & Service
Baton Rouge 225-272-6620

MARYLAND
Electric Motor Service
Baltimore 410-467-8080

GCS Service
Silver Spring 301-585-7550

MASSACHUSETTS
Ace Service Co., Inc.
Needham 781-449-4220

MICHIGAN
Bildons Appliance Service
Detroit 248-478-3320

Commercial Kitchen Service
Bay City 989-893-4561

Midwest Food Equip. Service
Grandville 616-261-2000

MINNESOTA
GCS Service
Minnetonka 800-822-2303 x20365

MISSOURI
General Parts
Kansas City 816-421-5400

Commercial Kitchen Services
St. Louis 314-890-0700

Kaemmerlen Parts & Service
St. Louis 314-535-2222

NEBRASKA
Anderson Electric
Omaha 402-341-1414

NEVADA
Burney's Commercial
Las Vegas 702-736-0006

Hi. Tech Commercial Service
N. Las Vegas 702-649-4616

NEW JERSEY
Jay Hill Repair
Fairfield 973-575-9145

Service Plus
Flanders 973-691-6300

NEW YORK
Acme American Repairs, Inc.
Brooklyn 718-456-6544

Alpro Service Co.
Brooklyn 718-386-2515

Appliance Installation
Buffalo 716-884-7425

Duffy's Equipment Services, Inc.
Buffalo 800-836-1014

3Wire Northern
Plattsburgh 800-634-5005

Duffy's Equipment Services, Inc.
Sauquoit 800-836-1014

J.B. Brady, Inc.
Syracuse 315-422-9271

NORTH CAROLINA
Authorized Appliance
Charlotte 704-377-4501

OHIO
Akron/Canton Comm. Svc. Inc.
Akron 330-753-6634

Service Solutions Group
Cincinnati 513-772-6600

Commercial Parts and Service
Columbus 614-221-0057

Electrical Appl. Repair Service
Brooklyn Heights 216-459-8700

E. A. Wichman Co.
Toledo 419-385-9121

OKLAHOMA
Hagar Rest. Service, Inc.
Oklahoma City 405-235-2184

Krueger, Inc.
Oklahoma City 405-528-8883

OREGON
Ron's Service, Inc.
Portland 503-624-0890

PENNSYLVANIA
Elmer Schultz Services
Philadelphia 215-627-5401

FAST Comm. Appl. Service
Philadelphia 215-288-4800

Appliance Installation & Service
Pittsburgh 412-809-0244

K & D Service Co.
Harrisburg 717-236-9039

Electric Repair Co.
Reading 610-376-5444

RHODE ISLAND
Marshall Electric Co.
Providence 401-331-1163

SOUTH CAROLINA
Whaley Foodservice Repair
Lexington 803-996-9900

TENNESSEE
Camp Electric
Memphis 901-527-7543

TEXAS
GCS Service
Fort Worth 800-433-1804

Armstrong Repair Service
Houston 713-666-7100

Cooking Equipment Specialist
Mesquite 972-686-6666

Commercial Kitchen Repair Co.
San Antonio 210-735-2811

UTAH
La Monica's Rest. Equip. Service
Murray 801-263-3221

VIRGINIA
Daubers
Norfolk 757-855-4097

Daubers
Springfield 703-866-3600

WASHINGTON
3Wire Restaurant Appliance
Seattle 800-207-3146

WISCONSIN
A.S.C., Inc.
Madison 608-246-3160

A.S.C., Inc.
Milwaukee 414-543-6460

CANADA

ALBERTA
Key Food Equipment Service
Edmonton 780-438-1690

BRITISH COLUMBIA
Key Food Equipment Service
Vancouver 604-433-4484

Key Food Equipment Service
Victoria 250-920-4888

MANITOBA
Air Rite, Inc.
Winnipeg 204-895-2300

NEW BRUNSWICK
EMR Services, Ltd.
Moncton 506-855-4228

ONTARIO
R.G. Henderson Ltd.
Toronto 416-422-5580

Choquette - CKS, Inc.
Ottawa 613-739-8458

QUÉBEC
Choquette - CKS, Inc.
Montreal 514-722-2000

Choquette - CKS, Inc.
Québec City 418-681-3944

UNITED KINGDOM

Marren Group
Northants +44(0)1933 665313

HATCO CORPORATION
P.O. Box 340500
Milwaukee, WI 53234-0500 U.S.A.
800-558-0607 414-671-6350
Parts and Service Fax 800-690-2966
International Fax 414-671-3976
partsandservice@hatcocorp.com
www.hatcocorp.com

24 Hour 7 Day Parts and Service Assistance available in the United States and Canada by calling 800-558-0607.

Printed in U.S.A. February 2015 Form No. FDWDRP-0215